Alternators & Starters & Parts

A U T O - S T A R T E R

European Headquarters

ul. Wosia Budzysza 7, 80-612 Gdańsk, Poland
Phone: +48 (0) 58 304-12-85, Fax: +48 (0) 58 304-13-77
e-mail: info@as-pl.com http://www.as-pl.com

Edition

January 2012

All marker's names and numbers in this catalogue are used for reference only.

PART 1 - ALTERNATORS AND PARTS

CZĘŚĆ 1 - ALTERNATORY I CZĘŚCI DO ALTERNATORÓW

A - ALTERNATORS / ALTERNATORY (electric conections - page 4) 5 - 63

ABE - ALTERNATOR BEARINGS / ŁOŻYSKA ALTERNATORÓW 64 - 68

ABEC - ALTERNATOR BEARING CAPS / USZCZELNIACZE ŁOŻYSK 68

ABR - ALTERNATOR BRACKETS / POKRYWY ALTERNATORÓW 69 - 74

APC - ALTERNATOR PLASTIC COVERS / PLASTIKOWE OSŁONY ALTERNATORÓW 75

ABH - ALTERNATOR BRUSH HOLDERS / SZCZOTKOTRZYMACZE ALTERNATORÓW 76 - 78

AB - ALTERNATOR BRUSH SETS / SZCZOTKI ALTERNATORÓW 79 - 82

AFP - ALTERNATOR FREE WHEEL PULLEYS / KOŁA PASOWE Z WOLNOBIEGIEM 83 - 89

AP - ALTERNATOR PULLEYS / KOŁA PASOWE ALTERNATORÓW 90 - 93

ARC - ALTERNATOR RECTIFIERS / PROSTOWNIKI ALTERNATORÓW 94 - 126

ARD - ALTERNATOR DIODES / DIODY ALTERNATORÓW 94 - 126

ARE - ALTERNATOR REGULATORS / REGULATORY ALTERNATORÓW (electric conections - page 4) 127 - 157

ARR - ALTERNATOR REGULATORS + RECTIFIERS / REGULATORY + PROSTOWNIKI ALTERNATORÓW 127 - 157

AR - ALTERNATOR ROTORS / WIRNIKI ALTERNATORÓW 158 - 161

ASL - ALTERNATOR SLIP RINGS / PIERŚCIENIE ALTERNATORÓW 162 - 163

AS - ALTERNATOR STATORS / UZWOJENIA ALTERNATORÓW 164 - 169

PART 2 - STARTERS AND PARTS

CZĘŚĆ 2 - ROZRUSZNIKI I CZĘŚCI DO ROZRUSZNIKÓW

S - STARTERS / ROZRUSZNIKI 170 - 219

SA - STARTER ARMATURES / WIRNIKI ROZRUSZNIKÓW 220 - 240

SBR - STARTER BRACKETS / GŁOWICE ROZRUSZNIKÓW 241 - 244

SBH - STARTER BRUSH HOLDERS / SZCZOTKOTRZYMACZE ROZRUSZNIKÓW 245 - 253

SB - STARTER BRUSH SETS / SZCZOTKI ROZRUSZNIKÓW 254 - 267

SD - STARTER DRIVES / BENDIKSY ROZRUSZNIKÓW 268 - 315

SDK - DUST COVER KITS / ZABEZPIECZENIA DO BENDIKSÓW 286

SF - STARTER FIELD COILS / UZWOJENIA ROZRUSZNIKÓW 316 - 318

SG - STARTER GEARS / BIEŻNIE ROZRUSZNIKÓW 319 - 322

SS - STARTER SOLENOIDS / AUTOMATY ROZRUSZNIKÓW 323 - 345

SP - STARTER SOLENOID PARTS / CZEŚCI AUTOMATÓW 346 - 348

SL - STARTER LEVERS / WIDEŁKI ROZRUSZNIKÓW 349

IP - IGNITION PARTS / CZĘŚCI ZAPŁONU 350

SBU - STARTER BUSHINGS / TULEJKI ROZRUSZNIKÓW 351 - 354

SRS - STARTER REPAIRS SETS / ZESTAWY NAPRAWCZE ROZRUSZNIKÓW 351 - 354

O - OTHER PARTS / POZOSTAŁE CZĘŚCI 355

M - MACHINES AND PARTS / MASZYNY I CZĘŚCI 356

PART 3 - REFERENCE GUIDE

CZĘŚĆ 3 - LISTA NUMERÓW REFERENCYJNYCH

AS APPLICATION

PLEASE ASK YOUR DEALER ABOUT THE AS APPLICATION !

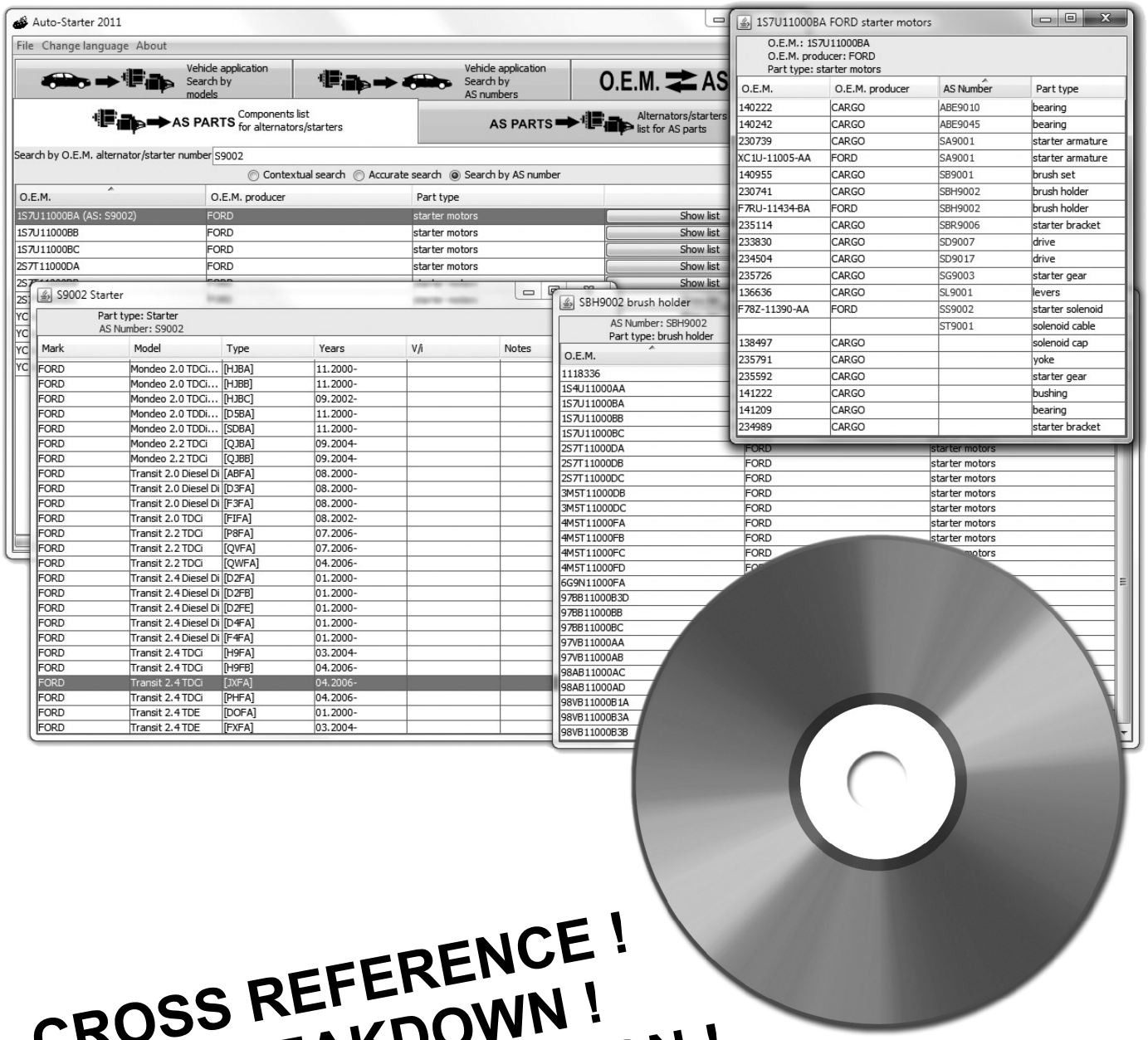

CROSS REFERENCE !
UNIT BREAKDOWN !
VEHICLE APPLICATION !
EVERY WEEK ONLINE UPDATE !

ALTERNATOR & REGULATOR ELECTRIC CONECTIONS

	Bosch	Delco	Hitachi	Paris/ RhoneValeo	Magneti Marelli	Lucas	Mitsubishi	Nippondenso	Mando	Ford
Field/Rotor, Sterowanie	DF	F	F	EXC	67	F	F	F	F	DF, F, FLD
Chassis/Ground, Masa	D-	GRD	E	- , B-	31	-	E	E-	E	D- , -VE
Charging lamp, Lampka	D+, 61, L	D+, L, 1	L	D+, L, 61E	15	D+	L	L	L, I	D+, IND, I
Ignition, Zapłon (Stacyjka)	15	I, IG	IG, R	15			IG, R	IG, R	IG, R	
Neutral/Wye, Neutralny			N		C		N	N	N	
Tacho, Obrotomierz	W	P, R, W	P	W	W	STA	P	P	P	
CPU Control, Sterowanie	DFM, FR		FR, G	COM, FR DF, DFW	FR, SIG		FR, G, D	FR, C, M		
Battery sense, Sensor akumulatora	S	M, S, 2	S			S	S	S	S	
Battery, Akumulator	B+	B+	B, A	B+	B+, 30	B+	B, A	B, A	B, A	B+, BAT
Dummy, Pusty			D				D	D	D	

PART 1

ALTERNATORS AND PARTS

AS ABH1003R

ABH - ALTERNATOR BRUSH HOLDER
1003 - *DELCO* ALTERNATOR BRUSH HOLDER
R - REMANUFACTURED

A - ALTERNATOR
ABE - ALTERNATOR BEARING
ABEC - ALTERNATOR BEARING CAPS
ABR - ALTERNATOR BRACKET
APC - ALTERNATOR PLASTIC COVER
ABH - ALTERNATOR BRUSH HOLDER
AB - ALTERNATOR BRUSH SET
AFP - ALTERNATOR FREE WEEL PULLEY
AT - PULLEY COMBI TOOL
AP - ALTERNATOR PULLEY
ARC - ALTERNATOR RECTIFIER
ARD - ALTERNATOR DIODE
ARE - ALTERNATOR REGULATOR
ARR - ALTERNATOR REGULATOR + RECTIFIER
AR - ALTERNATOR ROTOR
ASL - ALTERNATOR SLIP RING
AS - ALTRNATOR STATOR

R - ONLY REMANUFACTURED AVAILABLE

0xxx *BOSCH* PARTS
1xxx *DELCO* PARTS
2xxx *HITACHI* PARTS
3xxx *VALEO* PARTS
4xxx *MAGNETI MARELLI & LUCAS* PARTS
5xxx *MITSUBISHI* PARTS
6xxx *NIPPONDENSO* PARTS
9xxx OTHER SUPPLIERS

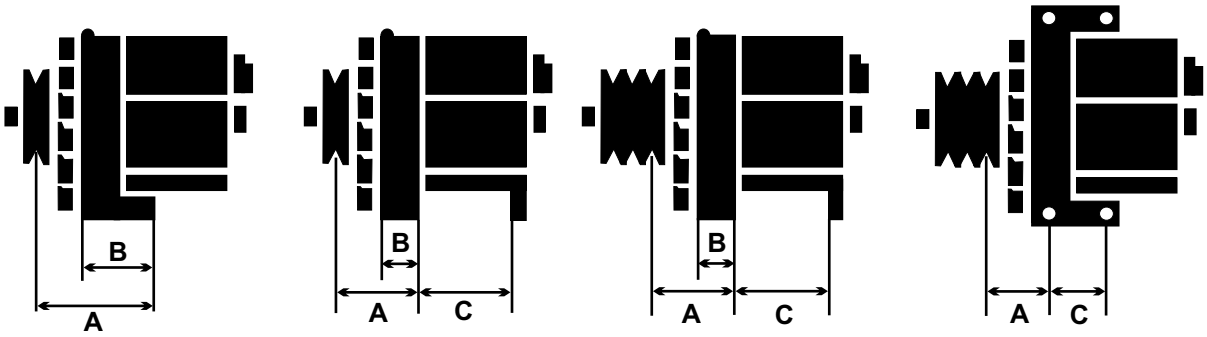

A, B, C - dimension in millimeters

ALTERNATORS
BOSCH

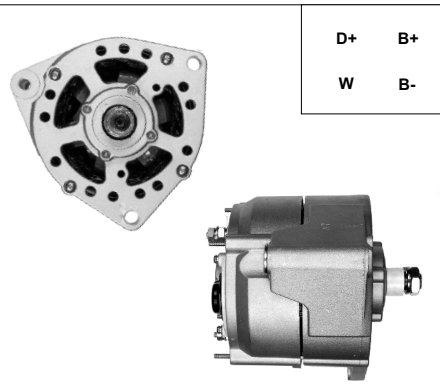

AS A0001

ORIGINAL		HC PARTS
0120469001	0120469518	CA333IR
0120469101	0120469686	24V 55A
		A: B:80
		C:

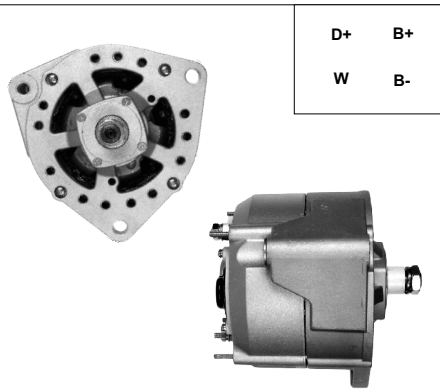

AS A0002

ORIGINAL		HC PARTS
0120468053	0120468113	CA1035IR
0120468107		24V 80A
		A: B:80
		C:

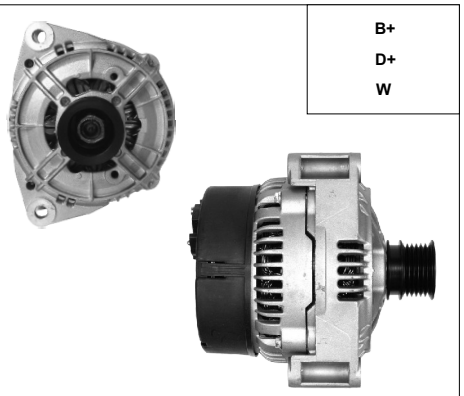

AS A0003

ORIGINAL		HC PARTS
0123500001		CA1477IR
0123510002		12V 120A
0123510023		A:91.5 B:56
		C:

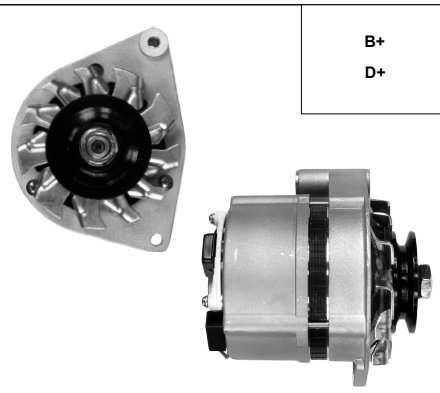

AS A0004

ORIGINAL		HC PARTS
0120339514		CA76IR
0120339531		12V 33A
		A:76.5 B:56
		C:

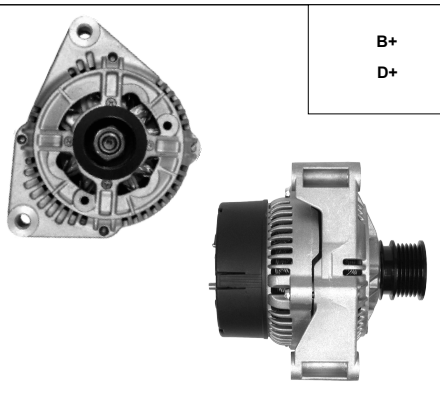

AS A0005

ORIGINAL		HC PARTS
0123335002		CA1044IR
2541920B		12V 90A
		A:92 B:56
		C:

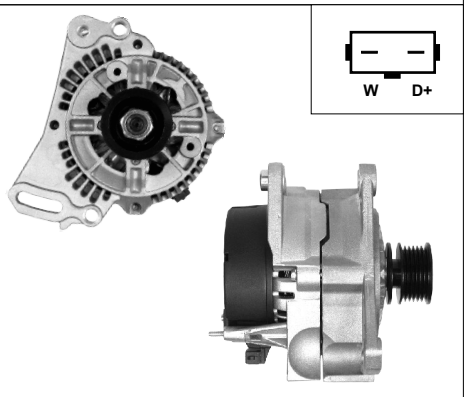

AS A0006

ORIGINAL		HC PARTS
0120485036	A13VI123	CA740IR
0123320002	A13VI140	12V 90A
		A:40 B:14
		C:61

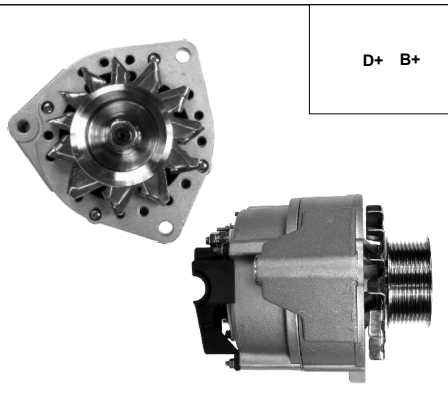

AS A0007

ORIGINAL		HC PARTS
0120469116		CA1593IR
6033GB3019		24V 80A
		A: B:80
		C:

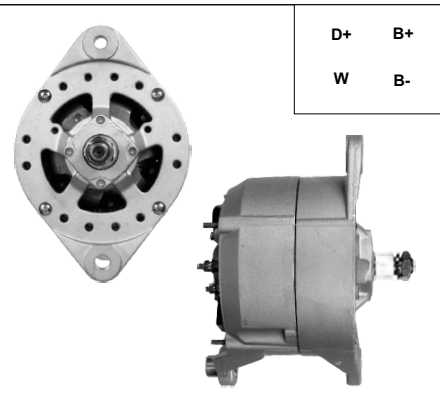

AS A0008

ORIGINAL		HC PARTS
0120468093	6033GB3021	CA907IR
0120468135		24V 80A
		A: B:14.5
		C:100

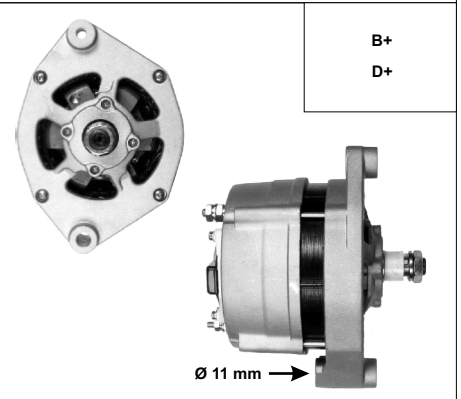

AS A0009

ORIGINAL		HC PARTS
0120469523		CA500IR
A14N100		24V 55A
		A: B:51
		C:

A, B, C - page 5

Electric conections - page 4

ALTERNATORS
BOSCH

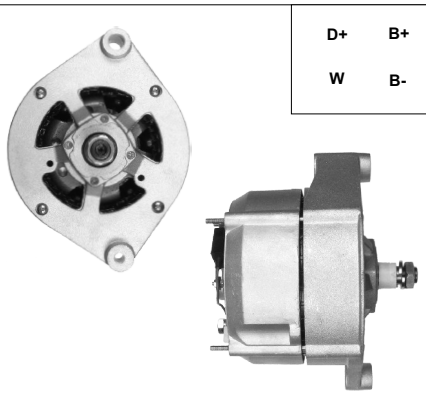

AS A0010

ORIGINAL	HC PARTS
0120468037	CA853IR
0120468114	24V 80A
	A: B:51
	C:

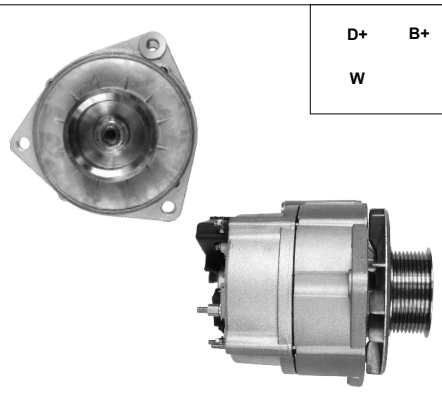

AS A0011

ORIGINAL	HC PARTS
0120468143	CA1505IR
6033GB3023	24V 100A
	A: B:80.5
	C:

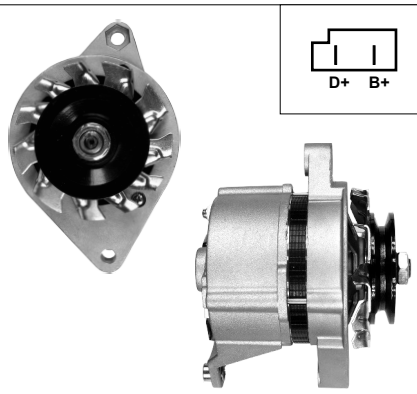

AS A0012

ORIGINAL	HC PARTS
0120339515	CA77IR
0120339516	12V 33A
0120339527	A:48.5 B:25
63300900	C:74

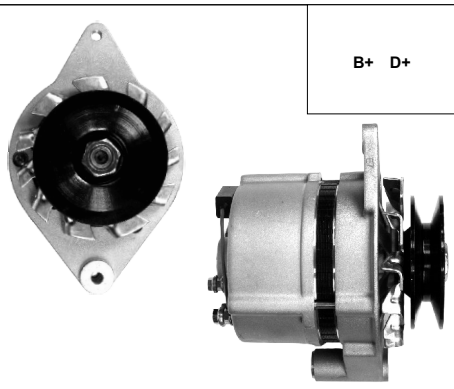

AS A0013

ORIGINAL	HC PARTS
0120339512	CA734IR
0120339513	12V 33A
0120339544	A:76 B:56
0120339543	C:

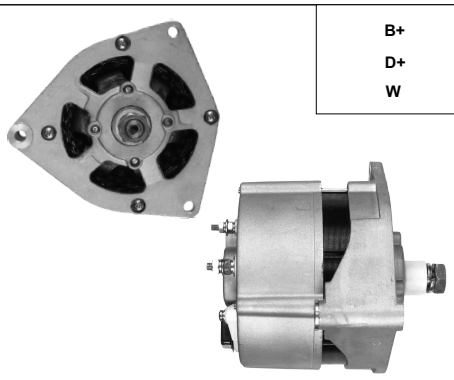

AS A0014

ORIGINAL	HC PARTS
0120488022	CA339IR
0120489022	12V 55A
	A: B:56
	C:

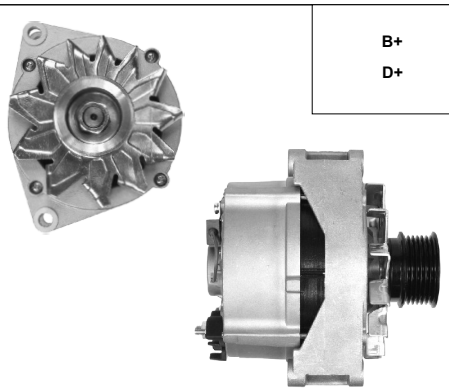

AS A0015

ORIGINAL	HC PARTS
0120469744	CA335IR
0120469745	12V 80A
	A:92 B:56
	C:

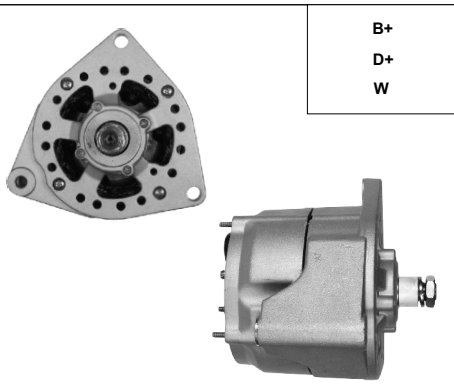

AS A0016

ORIGINAL	HC PARTS
0120488256	CA854IR
0120488278	24V 35A
0120488291	A: B:80
	C:

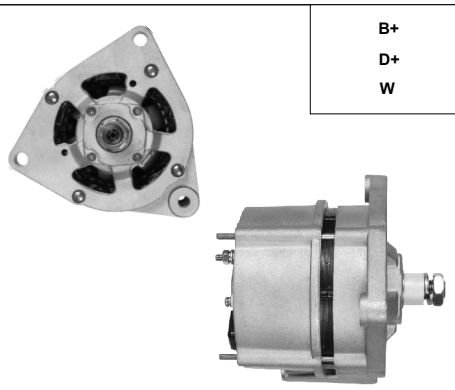

AS A0017

ORIGINAL	HC PARTS
0120489221	CA187IR
0120489225	24V 27A
0120489231	A: B:80
	C:

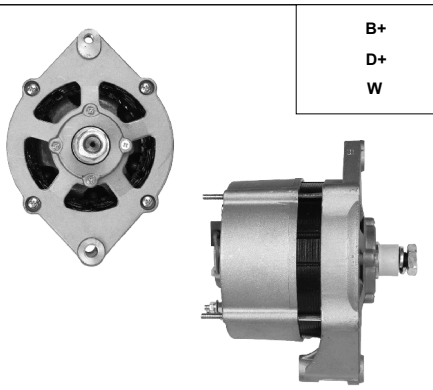

AS A0018

ORIGINAL	HC PARTS
0120488205	CA1197IR
	12V 65A
	A: B:51
	C:

A, B, C - page 5

Electric conections - page 4

ALTERNATORS
BOSCH

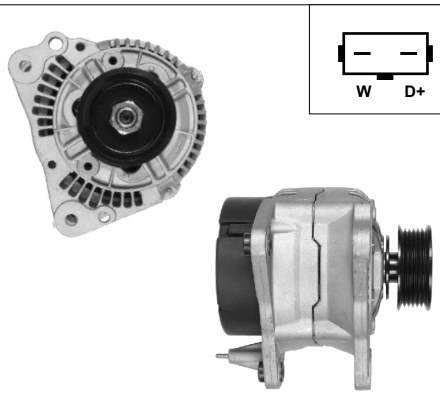

AS A0019

ORIGINAL
0123320018

HC PARTS
CA1228IR
12V 90A
A:39 B:14.5
C:60.5

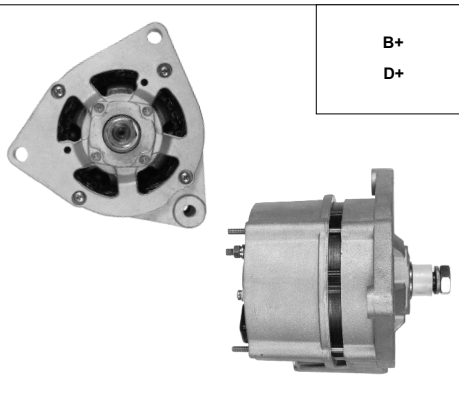

AS A0020

ORIGINAL
0120489032
0120489315

HC PARTS
CA186IR
12V 55A
A: B:80
C:

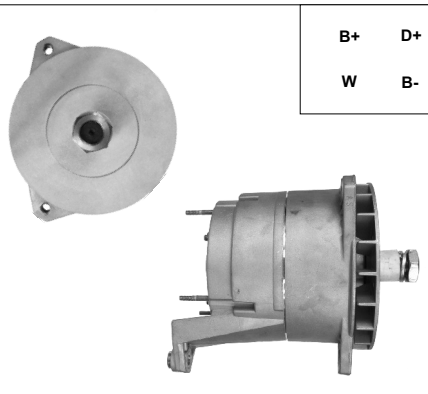

AS A0021

ORIGINAL
0120689535
0120689571

HC PARTS
CA1236IR
24V 140A
A: B:15.5
C:180

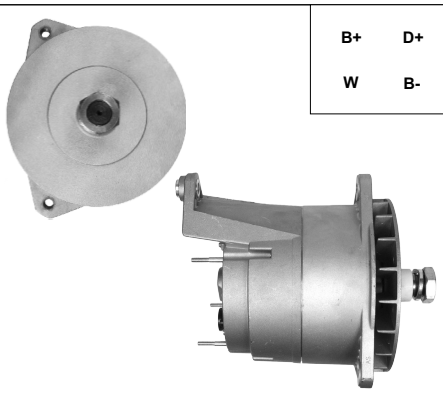

AS A0022

ORIGINAL
0120689569
0120689541

HC PARTS
CA1237IR
24V 140A
A: B:15.5
C:182

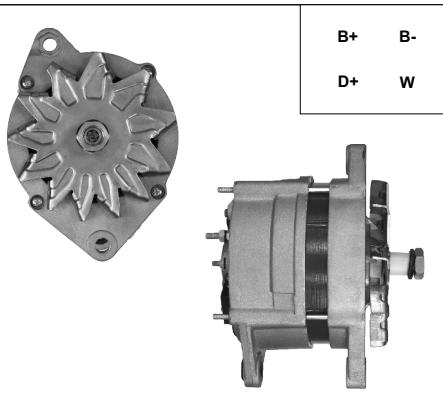

AS A0023

ORIGINAL
0120469010

HC PARTS
CA1336IR
24V 55A
A: B:17
C:63.5

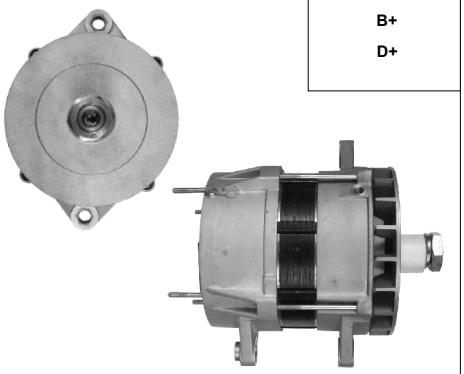

AS A0024

ORIGINAL
0120689538

CARGO
112302
24V 120A
A: B:16
C:86

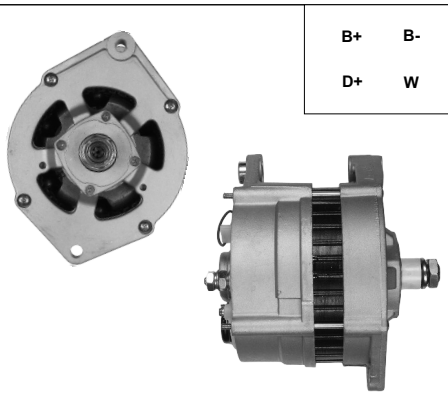

AS A0025

ORIGINAL
0120468065
0120468129

HC PARTS
CA1438IR
24V 80A
A: B:27
C:71

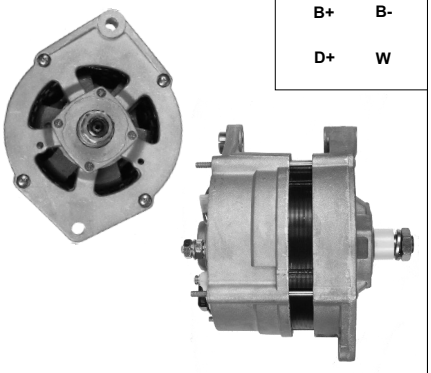

AS A0026

ORIGINAL
0120469920

HC PARTS
CA550IR
24V 55A
A: B:27
C:68

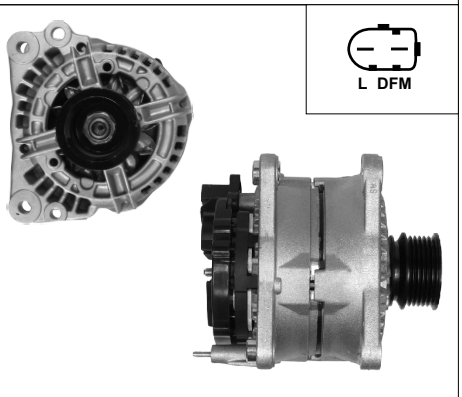

AS A0027

ORIGINAL
0124325003
0124325011

HC PARTS
CA1378IR
12V 90A
A:39 B:14
C:61

A, B, C - page 5

Electric conections - page 4

ALTERNATORS
BOSCH

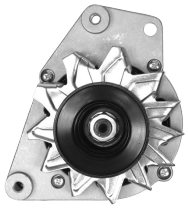

AS A0028

ORIGINAL
0120489364
0120489365

HC PARTS
CA298IR
12V 65A
A:109 B:56
C:

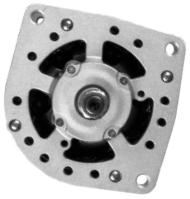

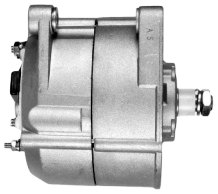

AS A0029

ORIGINAL
0120468131

HC PARTS
CA1148IR
24V 65A
A: B:23
C:68

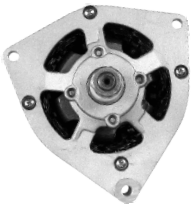

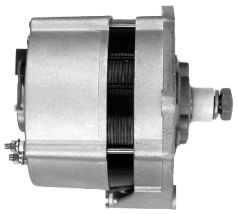

AS A0030

ORIGINAL
0120488224
0120489023

HC PARTS
CA341IR
24V 27A
A: B:56
C:

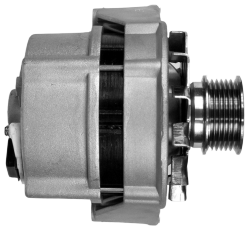

AS A0031

ORIGINAL
0120489321
0120489322
0120489325
0120489329

HC PARTS
CA345IR
12V 70A
A:92 B:56
C:

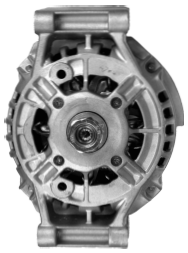

AS A0032

ORIGINAL
0123320051
0123320065
0124325039
0124325046

HC PARTS
CA1489IR
12V 90A
A:32 B:70
C:

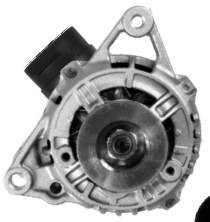

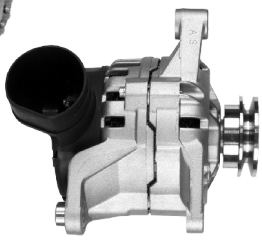

AS A0033

ORIGINAL
0123315500

HC PARTS
CA1556IR
12V 90A
A:48 B:14
C:82

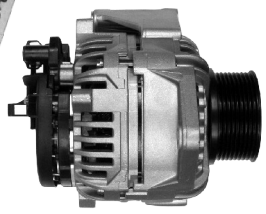

AS A0034

ORIGINAL
0124555004

HC PARTS
CA1666IR
24V 80A
A:101 B:77.5
C:

AS A0035

ORIGINAL
0123510082
0123510107
0123510108
0124515064

HC PARTS
CA1481IR
12V 115A
A:35 B:70
C:56

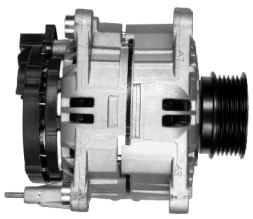

AS A0036

ORIGINAL
0124515013

HC PARTS
CA1445IR
12V 120A
A:39 B:14.5
C:61.5

A, B, C - page 5

Electric conections - page 4

ALTERNATORS
BOSCH

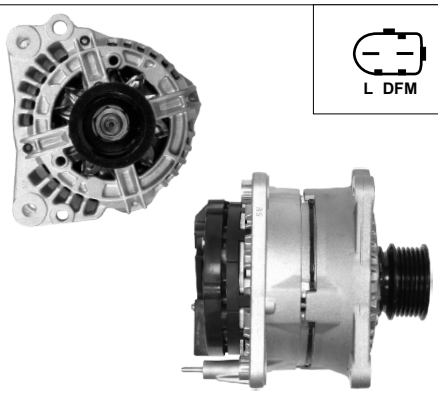

AS A0037

ORIGINAL
0124325003
0124325011
0124325032

HC PARTS
CA1512IR
12V 90A
A:40 B:14
C:61.5

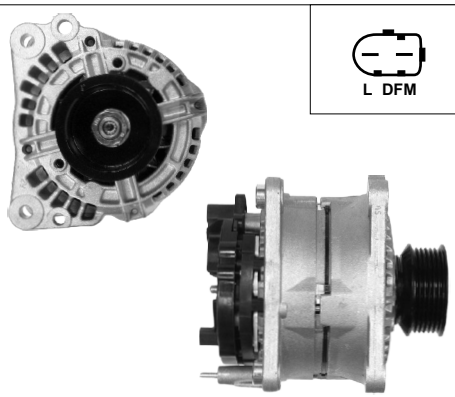

AS A0038

ORIGINAL
0124325022
0124325035

HC PARTS
CA1587IR
12V 90A
A:39 B:14
C:61

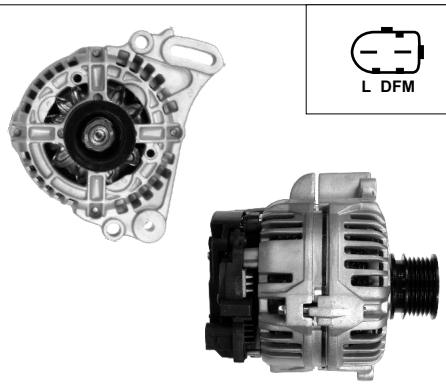

AS A0039

ORIGINAL
0124325106

HC PARTS
CA1815IR
12V 110A
A:39 B:14
C:61

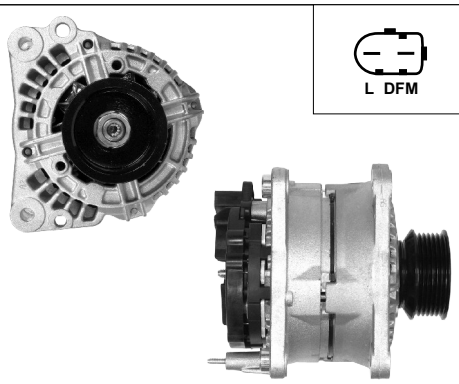

AS A0040

ORIGINAL
0124325004

HC PARTS
CA1402IR
12V 90A
A:39 B:14
C:61.5

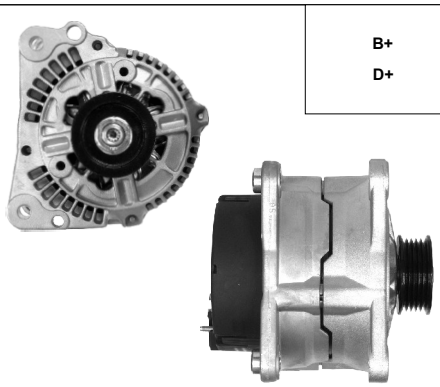

AS A0041

ORIGINAL
0123320025
A13VI137

HC PARTS
CA1486IR
12V 90A
A:30 B:14
C:61

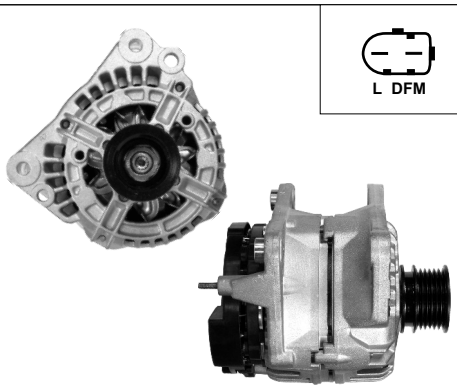

AS A0042

ORIGINAL
0124325013

HC PARTS
CA1542IR
12V 90A
A:39.5 B:14
C:61

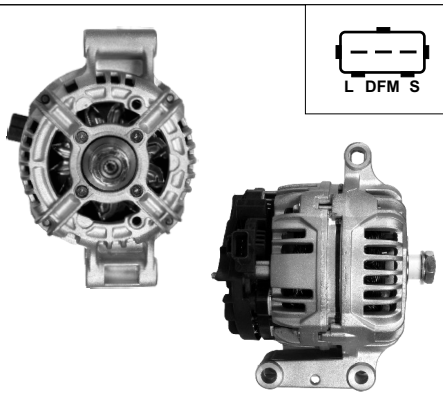

AS A0043

ORIGINAL
0124315019

HC PARTS
CA1639IR
12V 75A
A:41 B:55
C:86

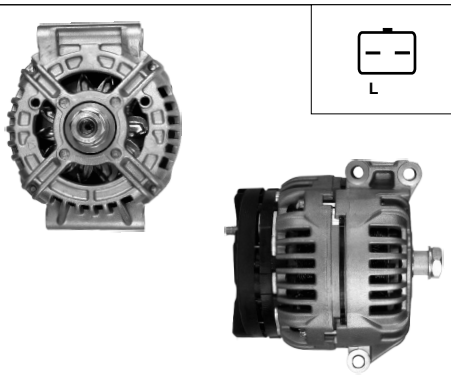

AS A0044

ORIGINAL
0124415007
0124415013

HC PARTS
CA1470IR, CA1628IR
12V 98A
A:20 B:80
C:41

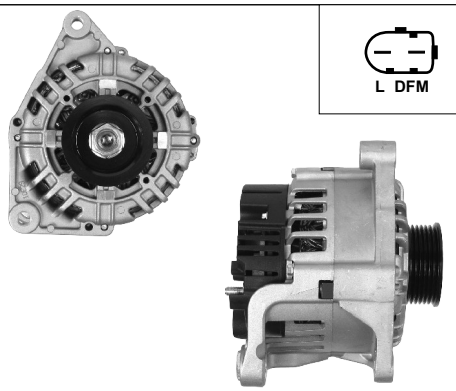

AS A0045

ORIGINAL
0124515028
0124515040

HC PARTS
CA1588IR
12V 120A
A:30.5 B:14
C:82.5

A, B, C - page 5

Electric conections - page 4

ALTERNATORS
BOSCH

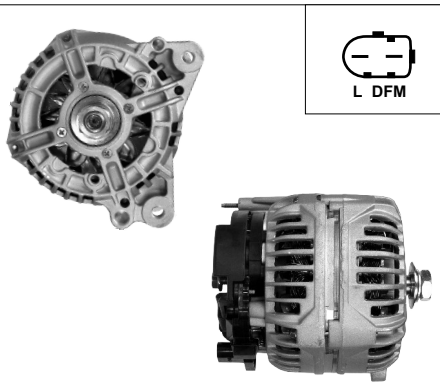

AS A0046

ORIGINAL
0124515026
0124515083

HC PARTS
CA1541IR
12V 120A
A:30 B:14.5
C:61.5

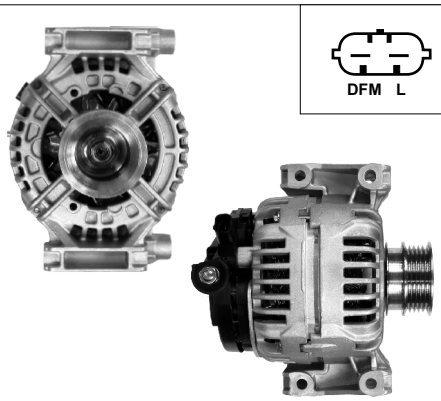

AS A0047

ORIGINAL
0124515033

HC PARTS
CA1740IR
12V 120A
A:33 B:79.5
C:57

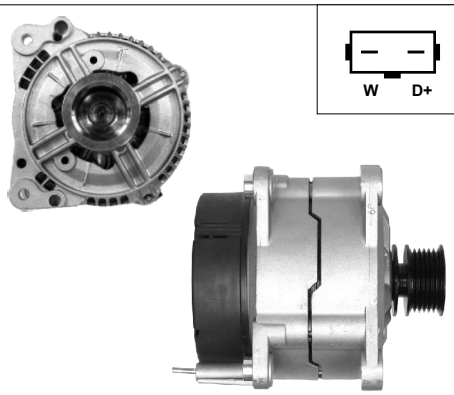

AS A0048

ORIGINAL
0120465020
0123505005

HC PARTS
CA828IR
12V 120A
A:39 B:14
C:61

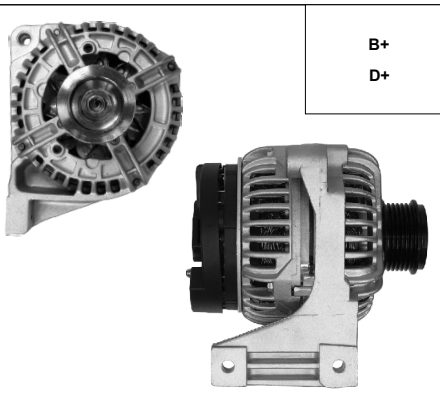

AS A0049

ORIGINAL
0124525001

HC PARTS
CA1673IR
12V 140A
A:44 B:20
C:83

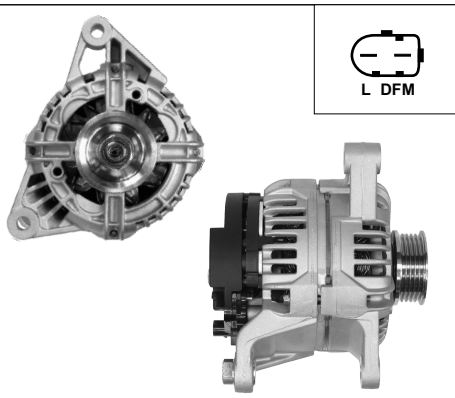

AS A0050

ORIGINAL
0124325017
0124325020
0124325036
0986044300

HC PARTS
CA1546IR
12V 90A
A:35 B:14.5
C:82.5

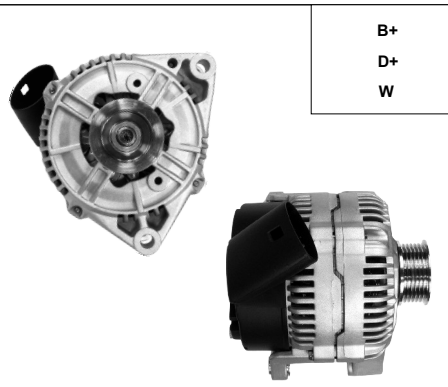

AS A0051

ORIGINAL
0123500007

HC PARTS
CA1507IR
12V 120A
A:51.5 B:33.5
C:53

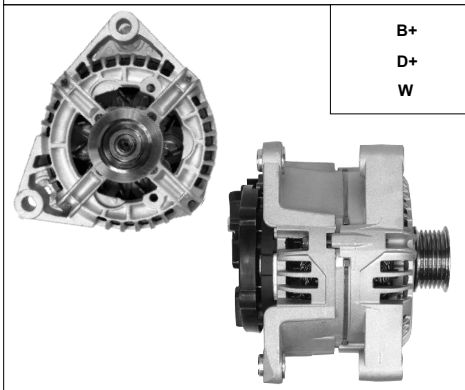

AS A0052

ORIGINAL
0124515005

HC PARTS
CA1577IR
12V 120A
A:51 B:33.5
C:54.5

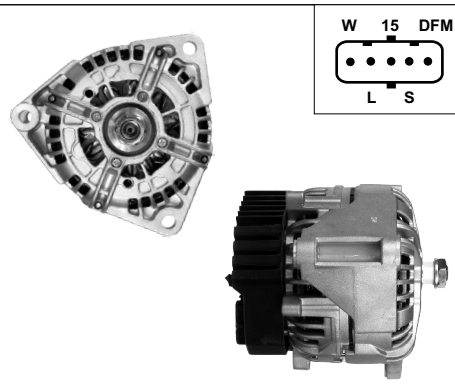

AS A0053

ORIGINAL
0111548702
0124655001

HC PARTS
CA1739IR
24V 100A
A: B:77.5
C:

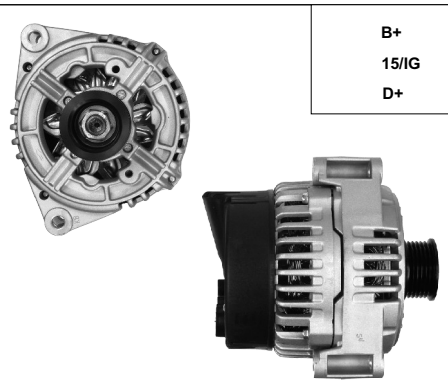

AS A0054

ORIGINAL
0123520017

HC PARTS
CA1491IR
12V 150A
A:83 B:56
C:

A, B, C - page 5

Electric conections - page 4

ALTERNATORS
BOSCH

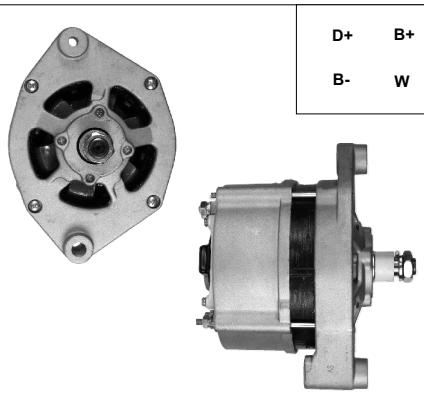

AS A0055

ORIGINAL
0120469507

HC PARTS
CA366IR
12V 90A
A: B:51
C:

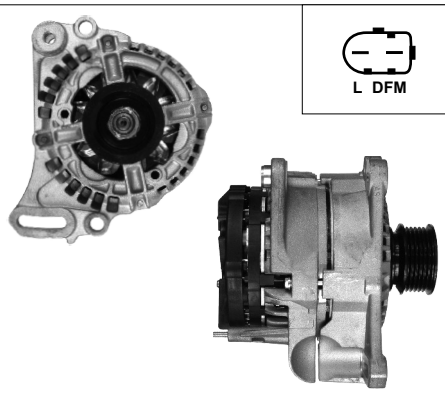

AS A0056

ORIGINAL
0124325016

HC PARTS
CA1567IR
12V 90A
A:39.5 B:14
C:61

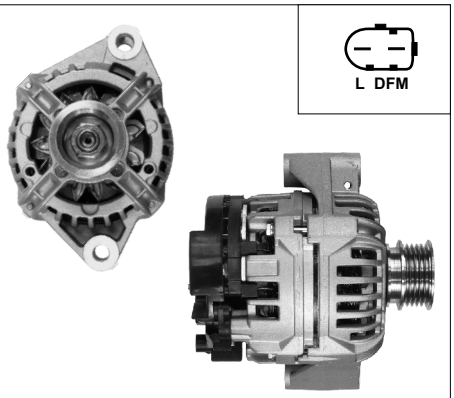

AS A0057

ORIGINAL
0124225011
0124225010

HC PARTS
CA1576IR
12V 85A
A:90.5 B:58
C:

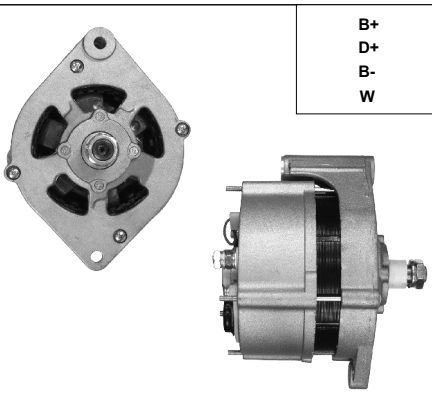

AS A0058

ORIGINAL
0120469569

HC PARTS
CA227IR
24V 55A
A: B:80
C:

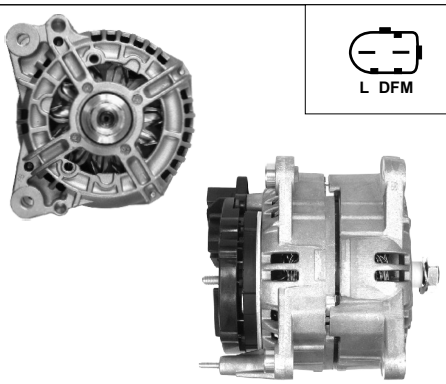

AS A0059

ORIGINAL
0124515010

HC PARTS
CA1394IR
12V 120A
A:39 B:14.5
C:61.5

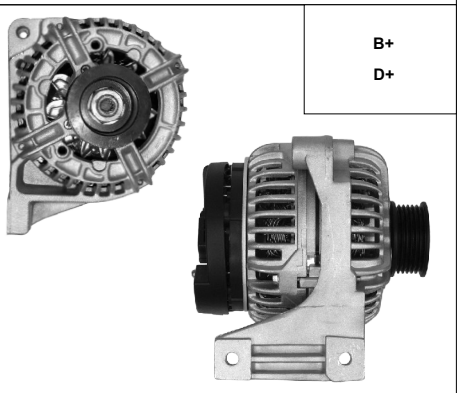

AS A0060

ORIGINAL
0124515017

HC PARTS
CA1443IR
12V 120A
A:46 B:108.5
C:81.5

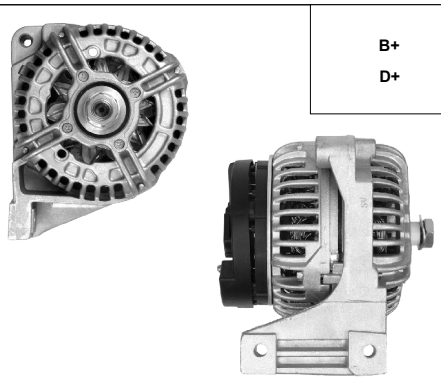

AS A0061

ORIGINAL
0124515019

HC PARTS
CA1439IR
12V 120A
A:46 B:
C:82

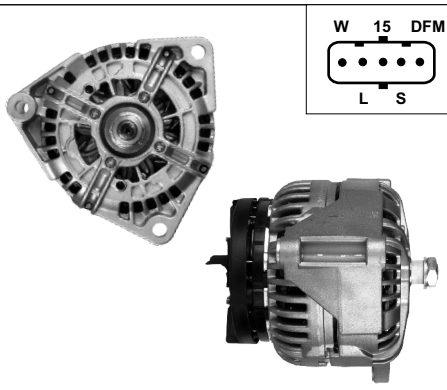

AS A0062

ORIGINAL
0124655009

HC PARTS
CA1871IR
24V 110A
A: B:77.5
C:

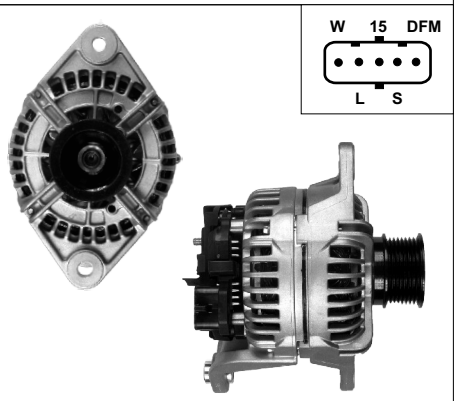

AS A0063

ORIGINAL
0124655008

HC PARTS
CA1883IR
24V 110A
A:57 B:13
C:106

A, B, C - page 5

Electric conections - page 4

ALTERNATORS
BOSCH

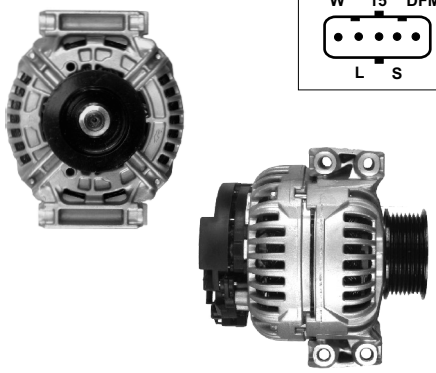

AS A0064

ORIGINAL
0124655007

HC PARTS
CA1880IIR
24V 100A
A:20 B:85
C:

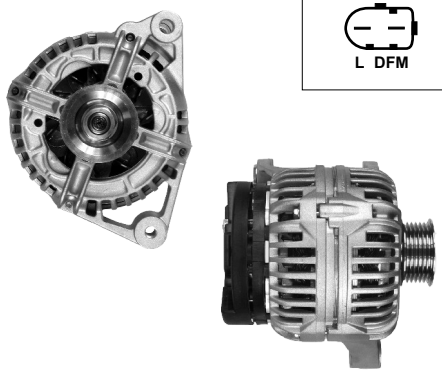

AS A0065

ORIGINAL
0124515042

LUCAS
LRA02141
12V 120A
A:41 B:14
C:80

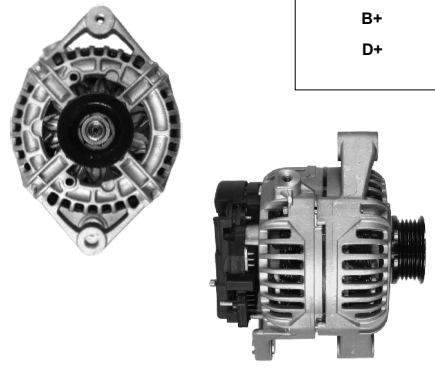

AS A0066

ORIGINAL
0124425009
0124515004

HC PARTS
CA1765IR
12V 120A
A:54.5 B:33.5
C:59

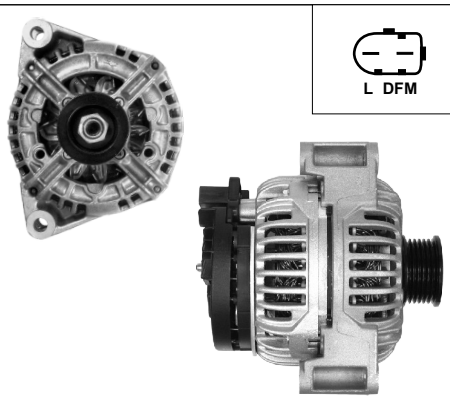

AS A0067

ORIGINAL
0124515056

HC PARTS
CA1872IR
12V 120A
A:82 B:56
C:

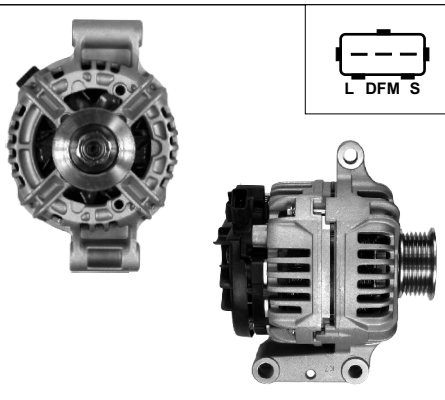

AS A0068

ORIGINAL
0124415016

HC PARTS
CA1636IR
12V 105A
A:41 B:56
C:75

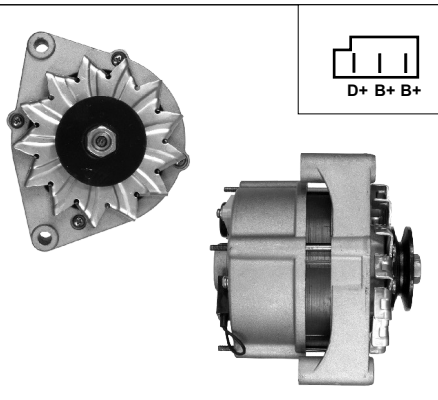

AS A0069

ORIGINAL
0120400858

HC PARTS
CA87IR
12V 55A
A:77 B:56
C:

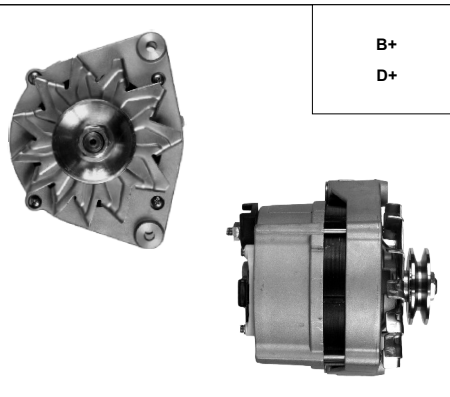

AS A0070

ORIGINAL
0120469777

HC PARTS
CA503IR
12V 90A
A:82 B:56
C:

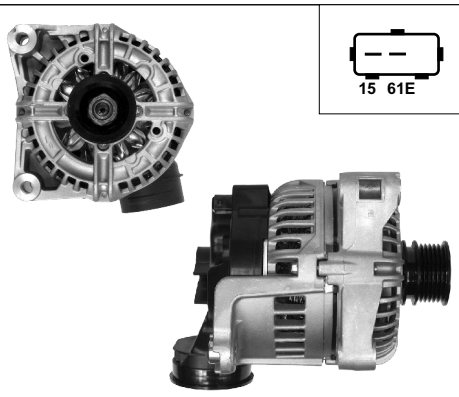

AS A0071

ORIGINAL
0124515050

HC PARTS
CA1591IR
12V 120A
A:69 B:28
C:77

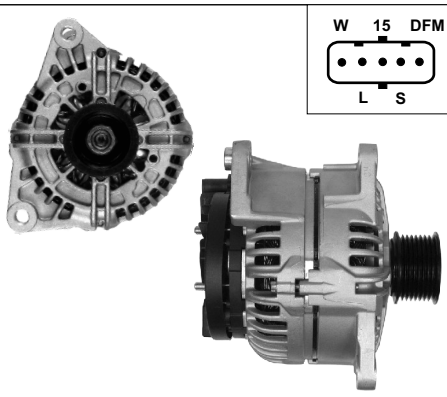

AS A0072

ORIGINAL
0124655005

HC PARTS
CA1812IR
24V 90A
A: B:14
C:82

A, B, C - page 5

Electric conections - page 4

ALTERNATORS
BOSCH

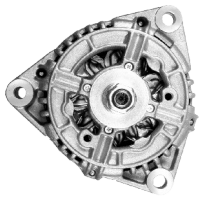
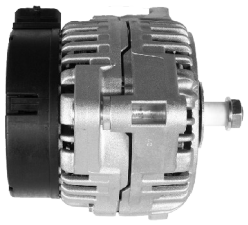
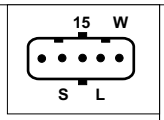

AS A0073

ORIGINAL
0123525501

HC PARTS
CA1663IR
24V 90A
A: B:80
C:

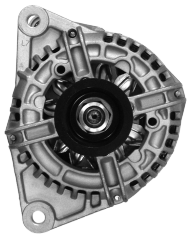
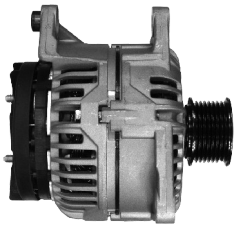
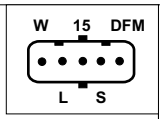

AS A0074

ORIGINAL
0124555005

HC PARTS
CA1699IR
24V 70A
A: B:14
C:81

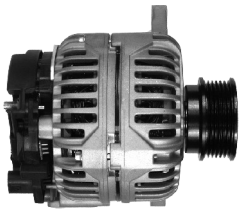
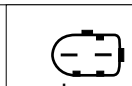

AS A0075

ORIGINAL
0124515044

HC PARTS
CA1679IR
12V 120A
A:47 B:14
C:81

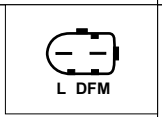

AS A0076

ORIGINAL
0124615009

HC PARTS
CA1769IR
12V 150A
A:28 B:70
C:56.5

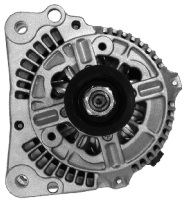
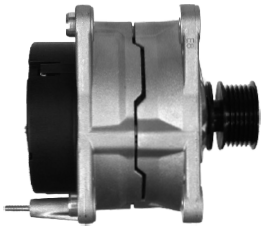
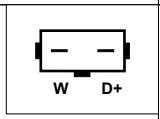

AS A0077

ORIGINAL
0123320001
0120485038

HC PARTS
CA736IR
12V 90A
A:40 B:14
C:61

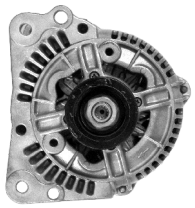
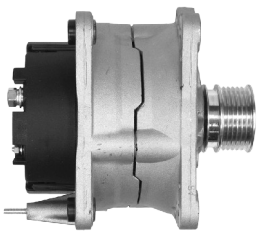
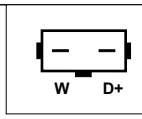

AS A0078

ORIGINAL
0120485020

HC PARTS
CA829IR
12V 90A
A:39 B:14
C:61

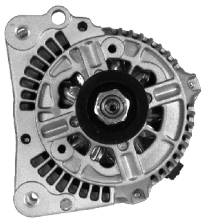
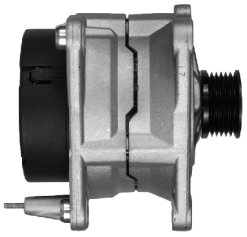
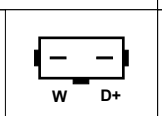

AS A0079

ORIGINAL
0123320019

HC PARTS
CA1265IR
12V 90A
A:29.5 B:14
C:61

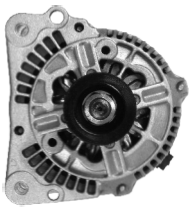
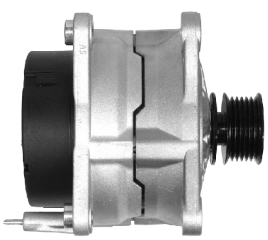
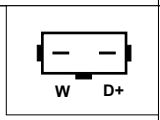

AS A0080

ORIGINAL
0123320034

HC PARTS
CA1240IR
12V 90A
A:40.5 B:14
C:60.5

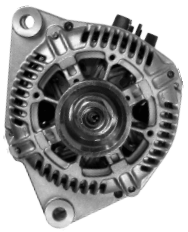
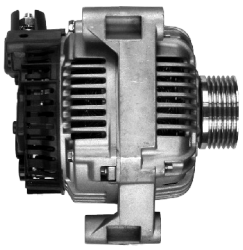
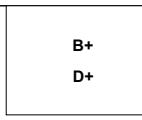

AS A0081

ORIGINAL
0123310011

HC PARTS
CA1152IR
12V 80A
A:92 B:56
C:

A, B, C - page 5

Electric conections - page 4

ALTERNATORS
BOSCH

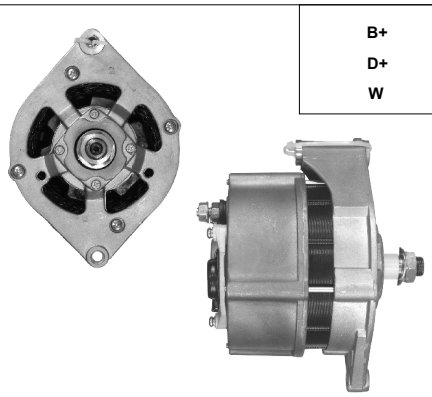

AS A0082

ORIGINAL
0120484011

HC PARTS
CA1198IR
12V 95A
A: B:50.5
C:

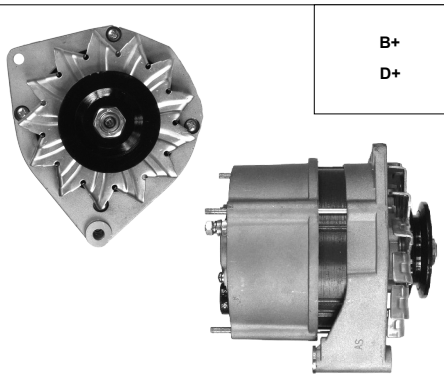

AS A0084

ORIGINAL
0120489756

HC PARTS
CA340IR
12V 65A
A:77 B:56
C:

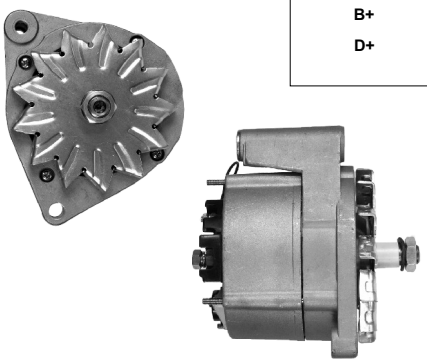

AS A0085

ORIGINAL
0120484024

HC PARTS
CA1736IR
12V 95A
A: B:80
C:

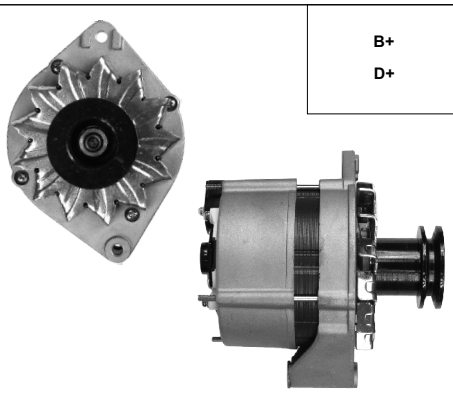

AS A0086

ORIGINAL
0120489432
0120489433

HC PARTS
CA619IR
12V 45A
A:109 B:56
C:

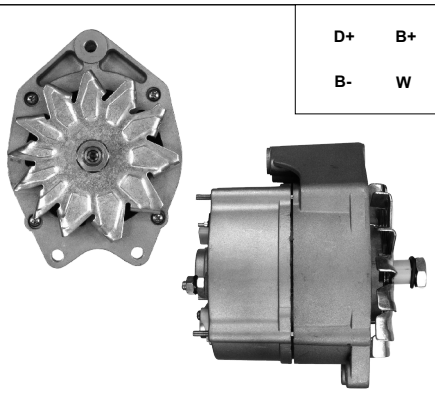

AS A0087

ORIGINAL
0120469527

HC PARTS
CA240IR
24V 55A
A: B:80
C:

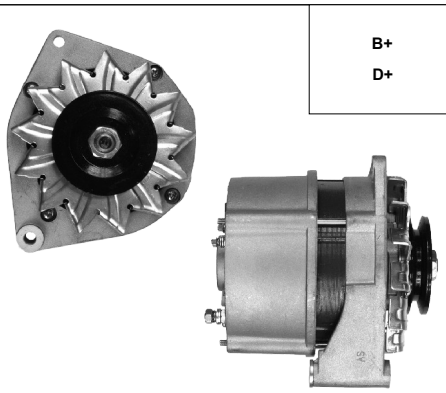

AS A0088

ORIGINAL
0120488153

HC PARTS
CA702IR
24V 35A
A: B:56
C:

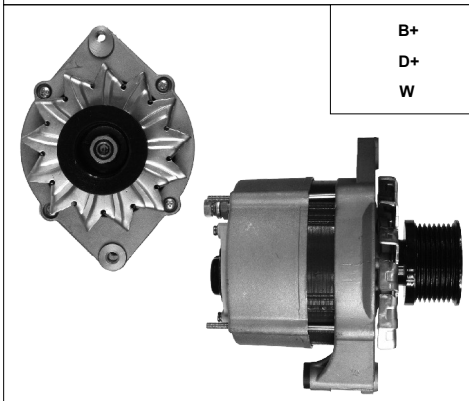

AS A0089

ORIGINAL
0120484017

HC PARTS
CA1068IR
12V 120A
A: B:56
C:

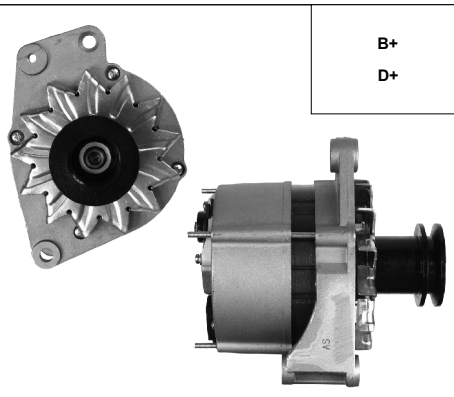

AS A0090

ORIGINAL
0120489364

HC PARTS
CA911IR
12V 65A
A:78 B:56
C:

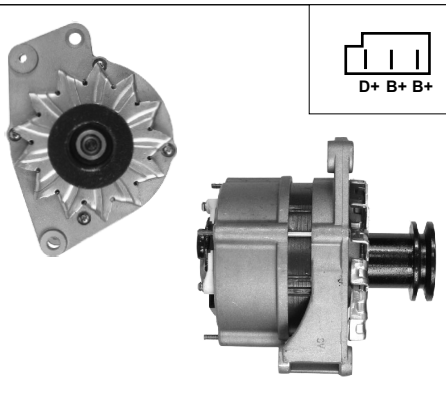

AS A0091

ORIGINAL
0120489197

HC PARTS
CA910IR
12V 65A
A:82 B:56
C:

A, B, C - page 5

Electric conections - page 4

ALTERNATORS
BOSCH

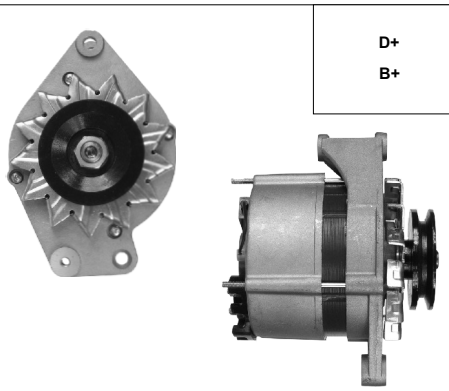

AS A0092

ORIGINAL
0120488241

HC PARTS
CA364IR
12V 55A
A: B:56
C:

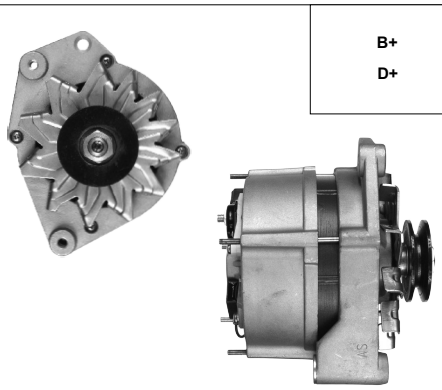

AS A0093

ORIGINAL
0120469601
0120469602
0120469603

HC PARTS
CA318IR
12V 90A
A:84 B:56
C:

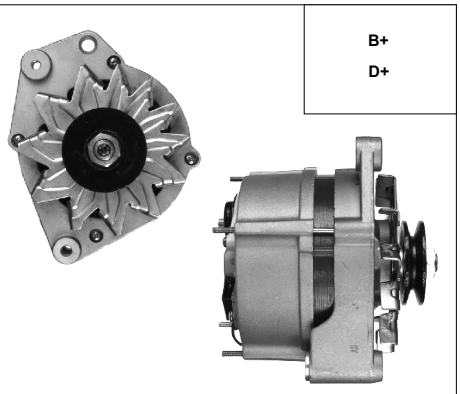

AS A0094

ORIGINAL
0120469581

HC PARTS
CA320IR
12V 90A
A:82 B:56
C:

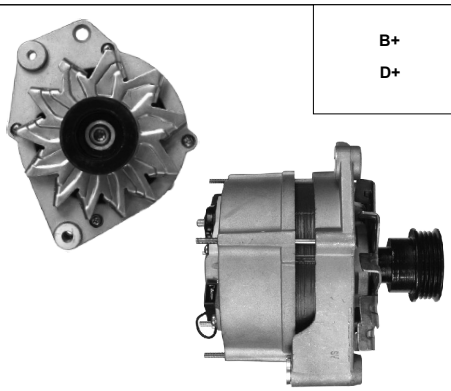

AS A0095

ORIGINAL
0120469011

HC PARTS
CA842IR
12V 90A
A:107 B:56
C:

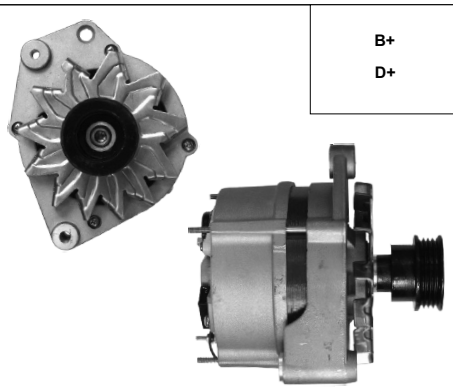

AS A0096

ORIGINAL
0120469002

HC PARTS
CA843IR
12V 90A
A:107 B:56
C:

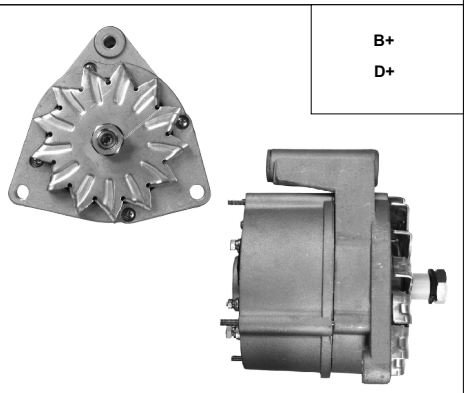

AS A0097

ORIGINAL
0120489316

HC PARTS
CA568IR
24V 30A
A: B:80
C:

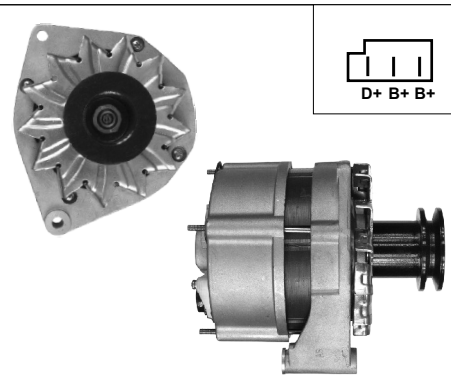

AS A0098

ORIGINAL
0120489966

HC PARTS
CA367IR
12V 45A
A:109 B:56
C:

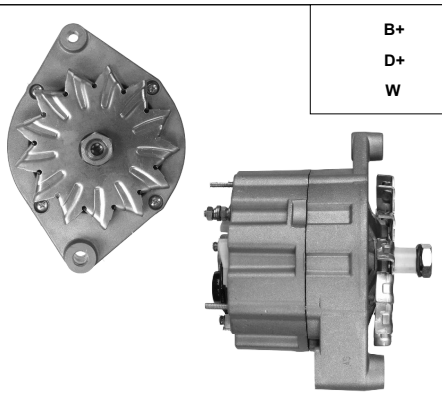

AS A0099

ORIGINAL
0120489060

HC PARTS
CA132IR
24V 45A
A: B:51
C:

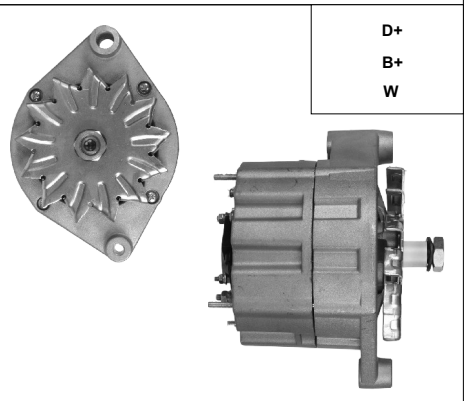

AS A0100

ORIGINAL
0120489303

HC PARTS
CA722IR
24V 45A
A: B:51
C:

ALTERNATORS
BOSCH

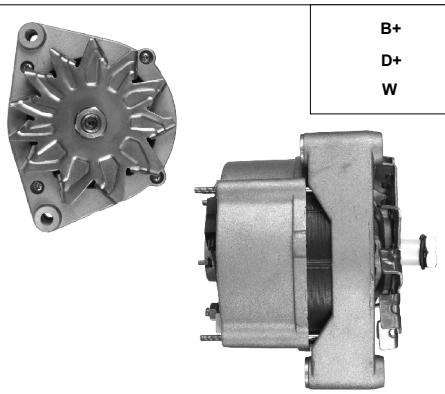

B+
D+
W

AS A0101

ORIGINAL
0120469579
0120469580

HC PARTS
CA595IR
24V 55A
A: B:56
C:

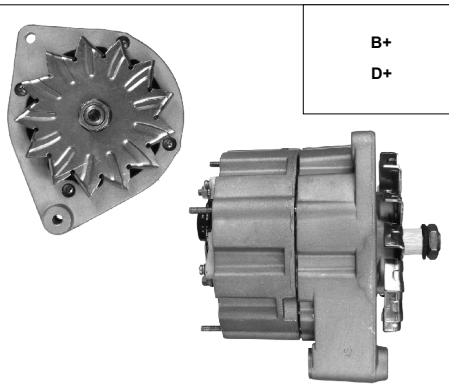

B+
D+

AS A0102

ORIGINAL
0120489731

HC PARTS
CA368IR
24V 35A
A: B:55
C:

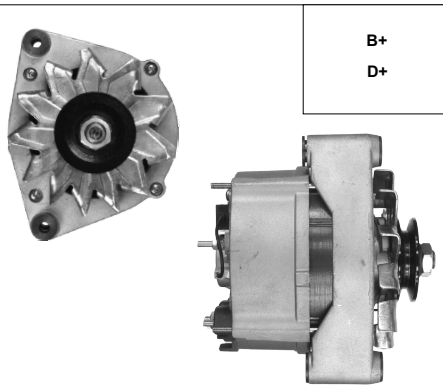

B+
D+

AS A0103

ORIGINAL
0120469514
0120469515

HC PARTS
CA328IR
12V 90A
A:83 B:56
C:

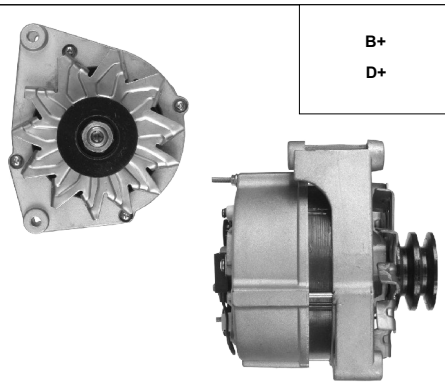

B+
D+

AS A0104

ORIGINAL
0120469784

HC PARTS
CA381IR
12V 80A
A:93 B:71
C:

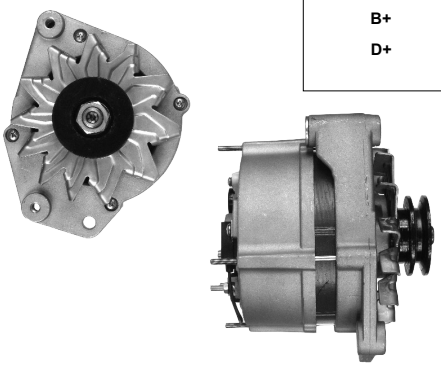

B+
D+

AS A0105

ORIGINAL
0120469931

HC PARTS
CA708IR
12V 90A
A:88 B:56
C:

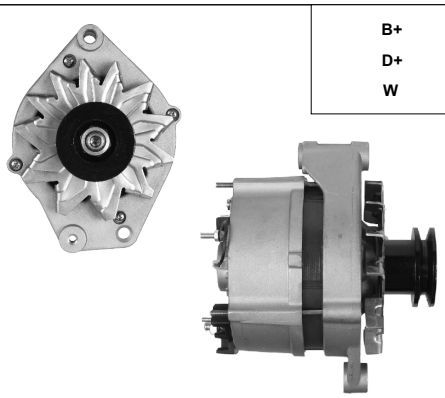

B+
D+
W

AS A0106

ORIGINAL
0120469021

HC PARTS
CA610IR
12V 90A
A:99 B:56
C:

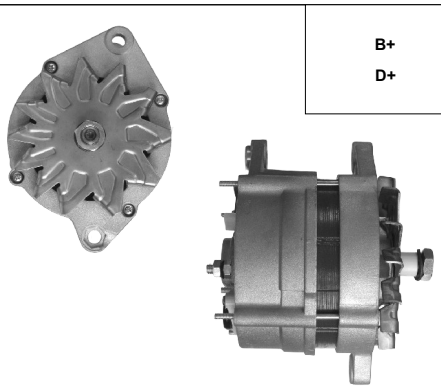

B+
D+

AS A0107

ORIGINAL
0120469641

HC PARTS
CA569IR
12V 85A
A: B:17
C:64

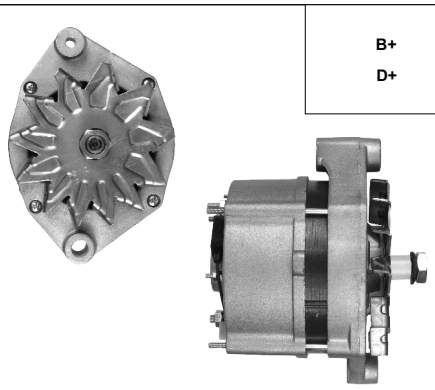

B+
D+

AS A0108

ORIGINAL
0120469014

HC PARTS
CA518IR
24V 55A
A: B:51
C:

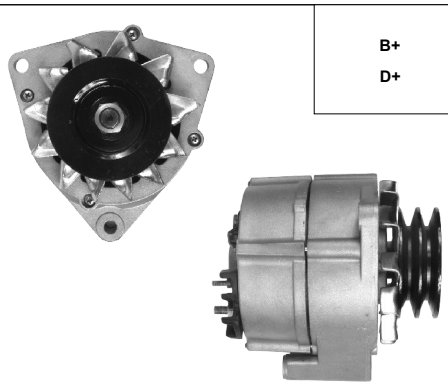

B+
D+

AS A0109

ORIGINAL
0120469526

HC PARTS
CA502IR
12V 90A
A: B:80
C:

ALTERNATORS
BOSCH

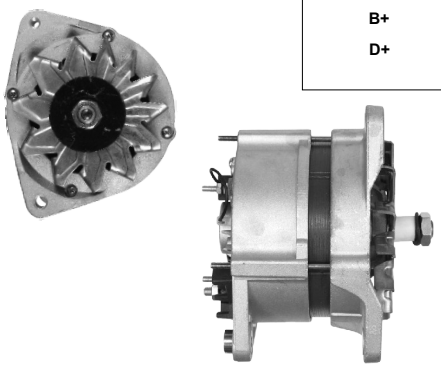

AS A0110

ORIGINAL
0120469009

HC PARTS
CA324IR
12V 90A
A: B:13.5
C:82

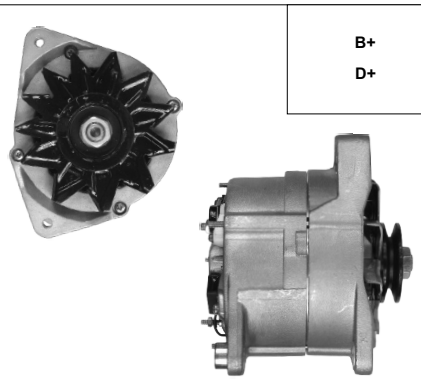

AS A0111

ORIGINAL
0120468020

HC PARTS
CA700IR
12V 115A
A:32 B:14.5
C:82

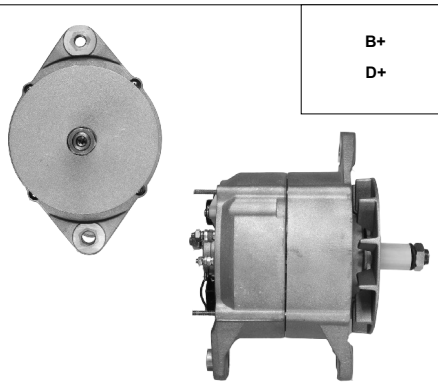

AS A0112

ORIGINAL
0120468028

HC PARTS
CA1381IR
12V 110A
A: B:14
C:101

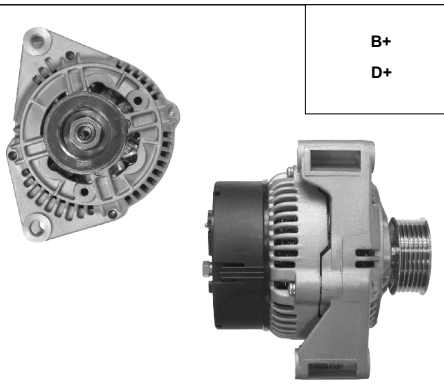

AS A0113

ORIGINAL
0123320011

HC PARTS
CA1246IR
12V 90A
A:84 B:56
C:

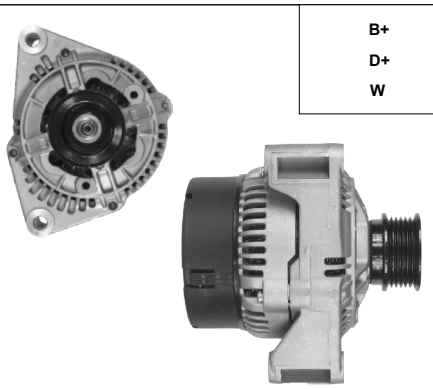

AS A0114

ORIGINAL
0123320010

HC PARTS
CA1062IR
12V 90A
A:91.5 B:56
C:

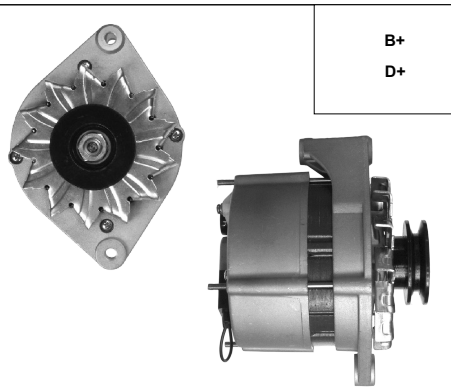

AS A0115

ORIGINAL
0120488168

HC PARTS
CA516IR
12V 70A
A:87 B:56
C:

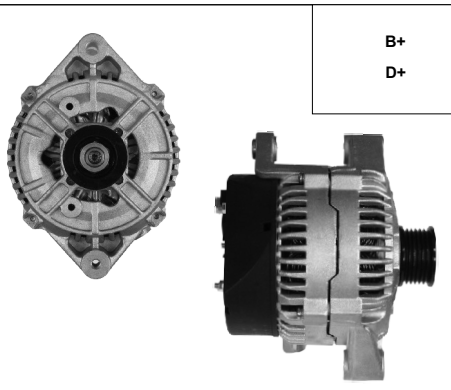

AS A0116

ORIGINAL
0123505001
0123510063

HC PARTS
CA1045IR
12V 120A
A:51 B:33.5
C:57.5

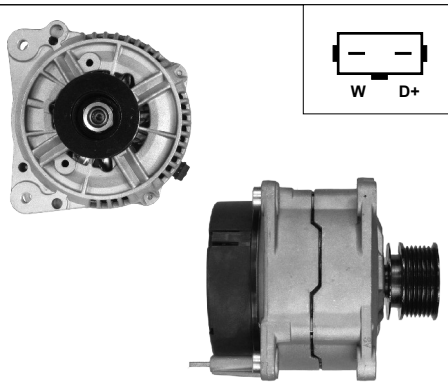

AS A0117

ORIGINAL
0123510007

HC PARTS
CA1142IR
12V 120A
A:43 B:14
C:61

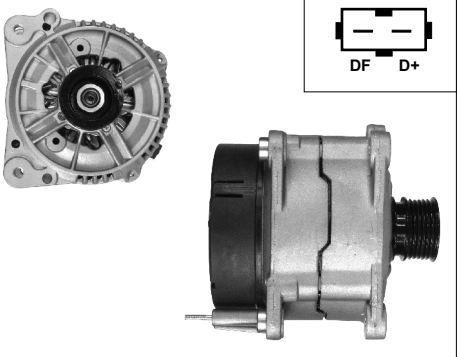

AS A0118

ORIGINAL
0123505011

HC PARTS
CA1089IR
12V 120A
A:39 B:14
C:61

A, B, C - page 5

Electric conections - page 4

ALTERNATORS
BOSCH

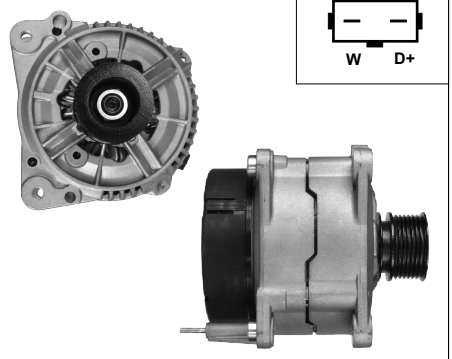

AS A0119

ORIGINAL
0120465021

HC PARTS
CA1399IR
12V 120A
A:43.5 B:14
C:61

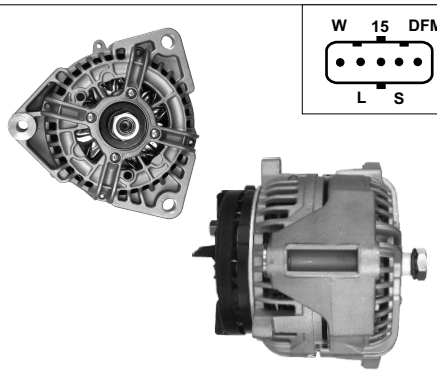

AS A0120

ORIGINAL
0124555003

HC PARTS
CA1694IR
24V 80A
A: B:80
C:

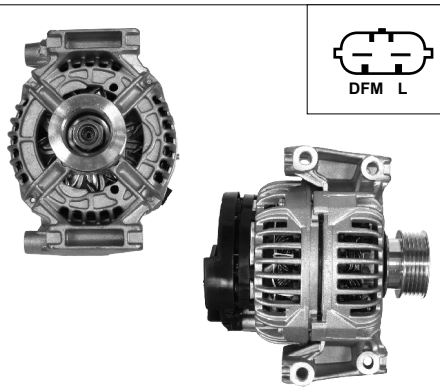

AS A0121

ORIGINAL
0124415009

HC PARTS
CA1592IR
12V 100A
A:32 B:79
C:65

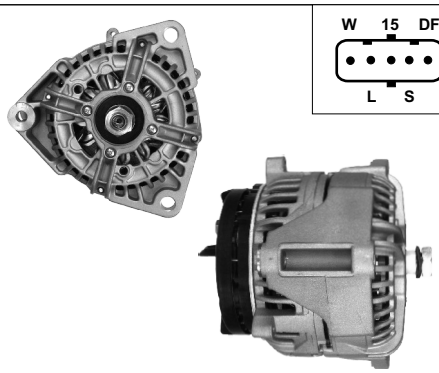

AS A0122

ORIGINAL
0124655003

HC PARTS
CA1693IR
24V 100A
A: B:80
C:

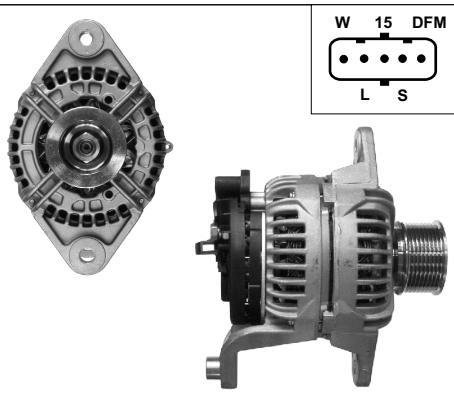

AS A0123

Replaced by A0138

HC PARTS
CA1853IR
24V 80A
A: B:14
C:105.5

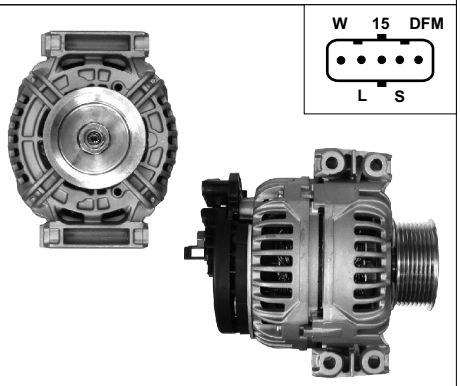

AS A0124

ORIGINAL
0124555008

HC PARTS
CA1851IR
24V 80A
A:22 B:85
C:

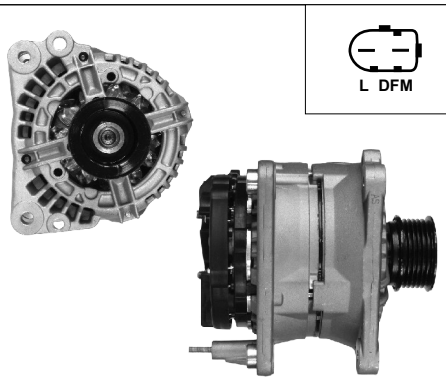

AS A0125

ORIGINAL
0124315004

HC PARTS
CA1511IR
12V 70A
A:40 B:14
C:61

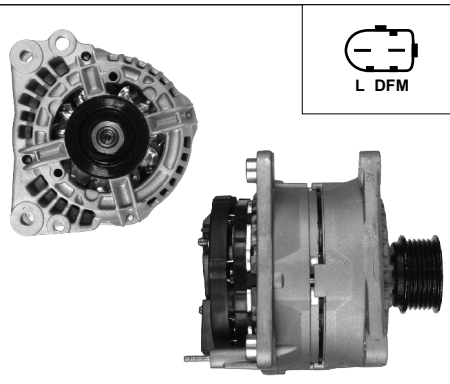

AS A0127

ORIGINAL
0124325001

HC PARTS
CA1446IR
12V 90A
A:40 B:14.3
C:61

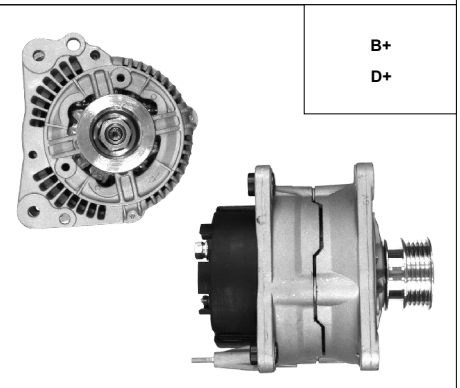

AS A0128

ORIGINAL
0123320033

HC PARTS
CA1226IR
12V 90A
A:42.5 B:14
C:61

A, B, C - page 5

Electric conections - page 4

ALTERNATORS
BOSCH

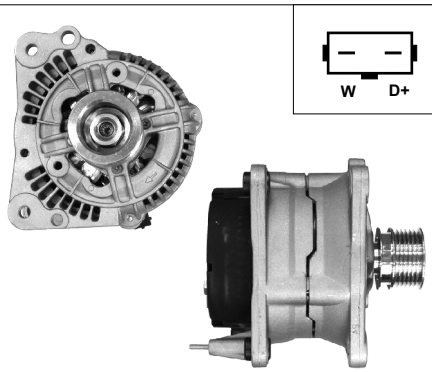

AS A0129

ORIGINAL
0123320008

HC PARTS
CA1269IR
12V 90A
A:43 B:14
C:61

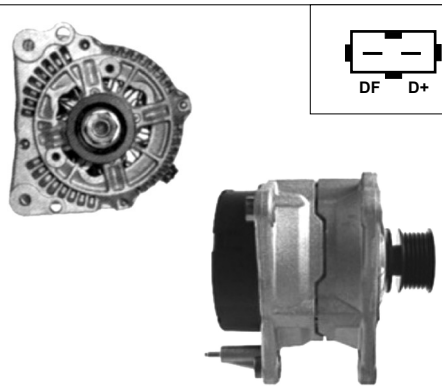

AS A0130

ORIGINAL
0123325005

HC PARTS
CA1262IR
12V 90A
A:40 B:14
C:61

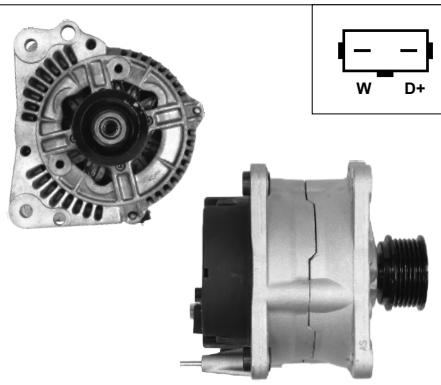

AS A0131

ORIGINAL
0120485043

HC PARTS
CA827IR
12V 70A
A:39 B: 14
C: 61.5

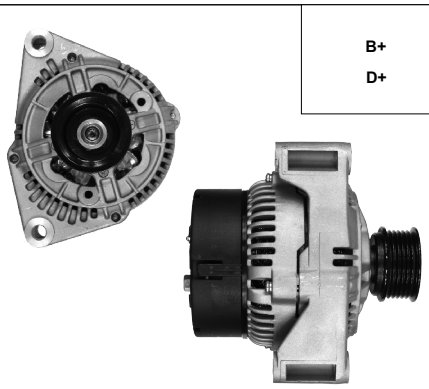

AS A0133

ORIGINAL
0123320046

HC PARTS
CA1395IR
12V 90A
A:92.5 B:56.1
C:

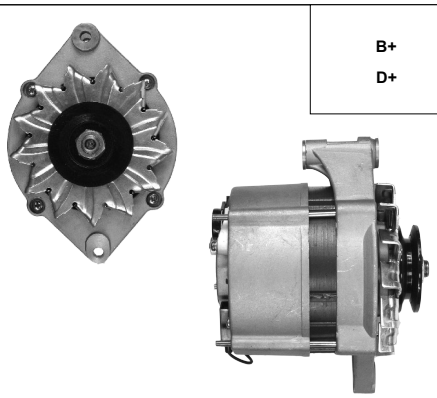

AS A0134

ORIGINAL
0120489339

HC PARTS
CA353IR
12V 65A
A:77 B:56
C:

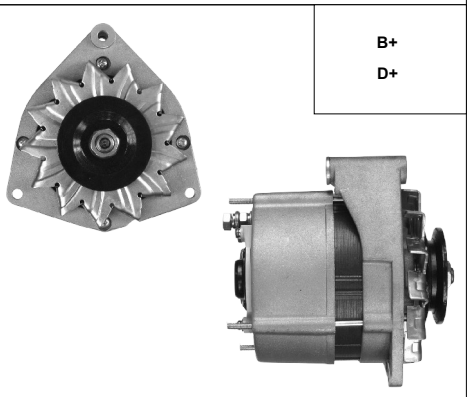

AS A0135

ORIGINAL
0120484021

HC PARTS
CA1335IR
12V 120A
A: B:56
C:

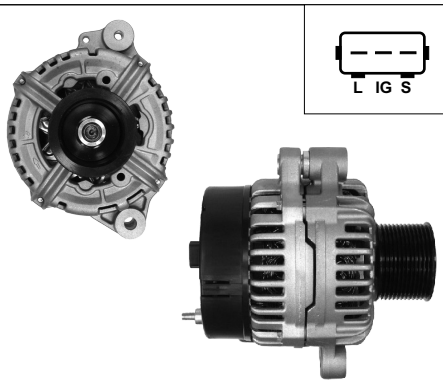

AS A0136

ORIGINAL
0123525502

HC PARTS
CA1633IR
24 V 90 A
A: B: 56.5
C:

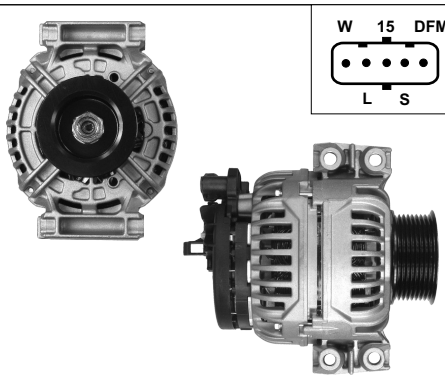

AS A0137

Replaced by A0124

HC PARTS
CA1851IR
24V 80A
A:22 B:85
C:

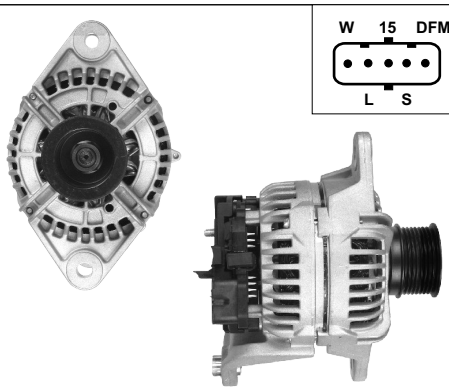

AS A0138

ORIGINAL
0124555009
0986046290

HC PARTS
CA1853IR
24V 80A
A: B:14
C:105.5

ALTERNATORS
BOSCH

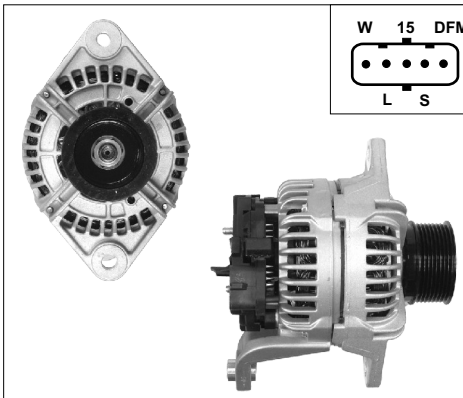

AS A0139

Replaced by A0063

HC PARTS
CA1883IR
24V 110A
A: B:14
C:105.5

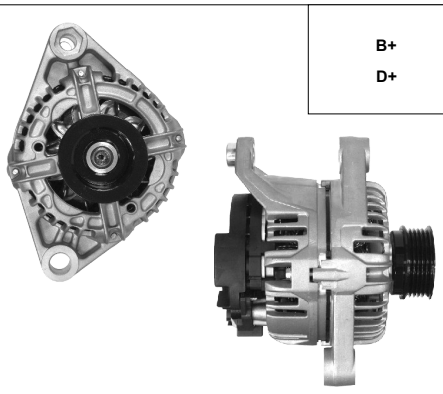

AS A0140

ORIGINAL
0124415011

HC PARTS
CA1471IR
12V 90A
A:58.5 B:25
C:70

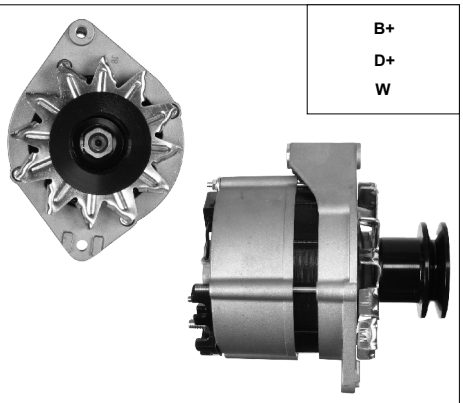

AS A0141

ORIGINAL
0120489434

HC PARTS
CA319IR
12V 65A
A:110 B:56
C:

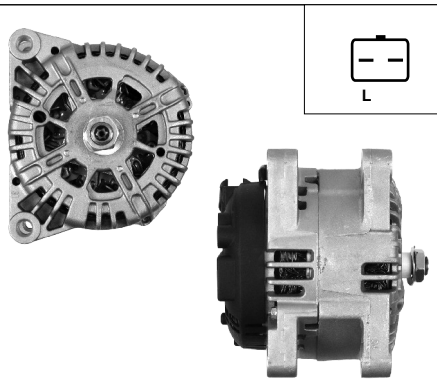

AS A0142

ORIGINAL
0124525035

HC PARTS
CA1761IR
12V 150A
A:42 B:21
C:45

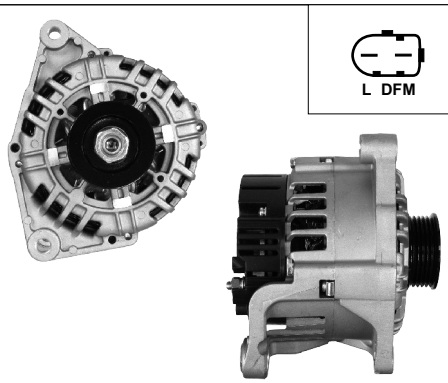

AS A0143

ORIGINAL
0124515025
0986044320
B120516094

HC PARTS
CA1759IR
12V 120A
A:34.5 B:14
C:82.5

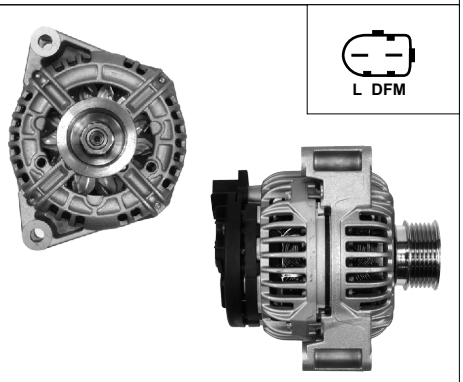

AS A0144

ORIGINAL
0124515046
0986042550

HC PARTS
CA1689IR
12V 120A
A:92 B:56
C:

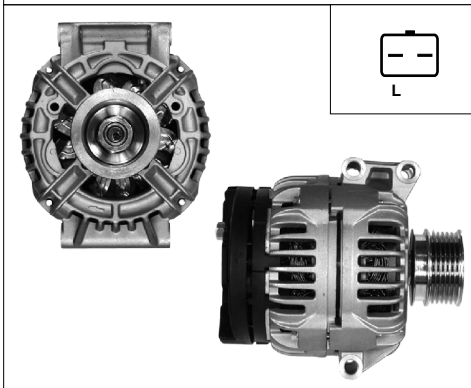

AS A0145

ORIGINAL
0124325024
0124325031
0986042720

HC PARTS
CA1544IR
12V 85 A
A:21 B:80
C:41

AS A0146

ORIGINAL
0124625001
0124625003
0986046310

HC PARTS
CA1861IR
12V 160A
A:45.5 B:20
C:83

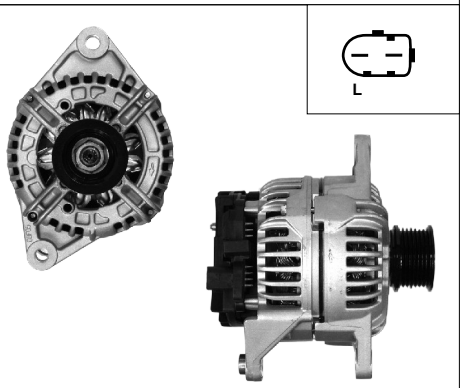

AS A0147

ORIGINAL
0124525020
0986046210

HC PARTS
CA1837IR
12V 140A
A:41 B:14
C:81.5

ALTERNATORS
BOSCH

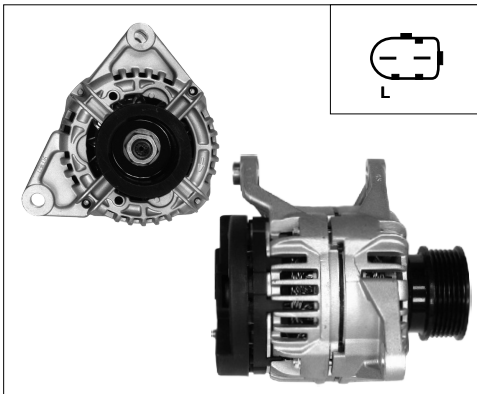

AS A0149

ORIGINAL	HC PARTS
0124320001	CA1557IR
	12V 90A
	A:47 B:14
	C:80.5

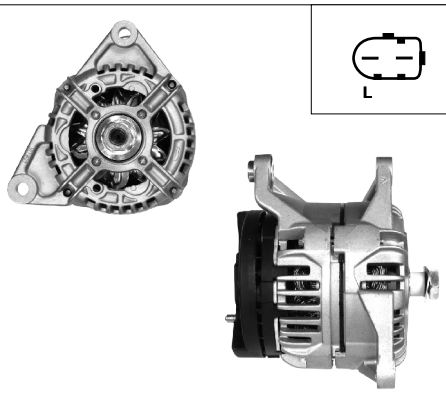

AS A0150

ORIGINAL	HC PARTS
0124325122	CA1915IR
	12V 110A
	A: B:14
	C:82

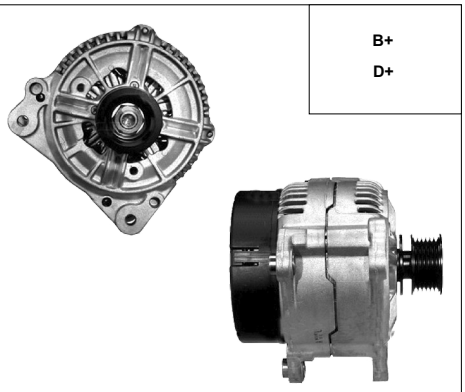

AS A0151

ORIGINAL	HC PARTS
0123510008	CA1147IR
	12V 120A
	A:40 B: 14
	C: 61

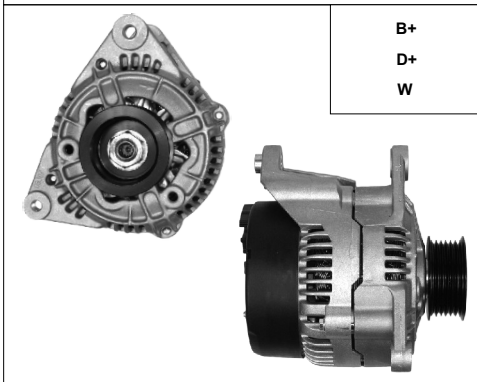

AS A0152

ORIGINAL	HC PARTS
0120485029	CA738IR
0123310014	12V 70A
0986036690	A:33 B:14.5
	C:81.5

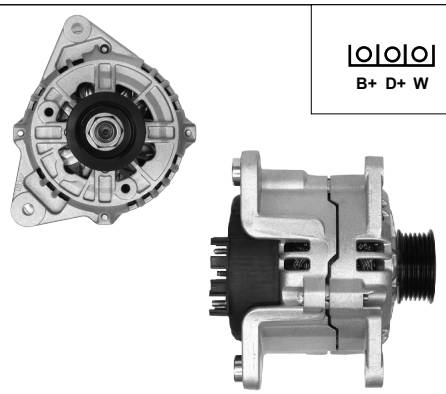

AS A0153

ORIGINAL	HC PARTS
0123310029	CA1037IR
0123310053	12V 70A
0986038990	A:32.5 B:14
	C:79

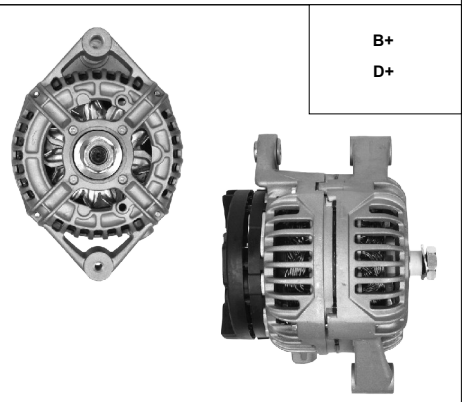

AS A0154

ORIGINAL	HC PARTS
0124425009	CA1821IR
0124515004	12V 120A
0124515031	A:54.5 B:33.5
0986042800	C:59

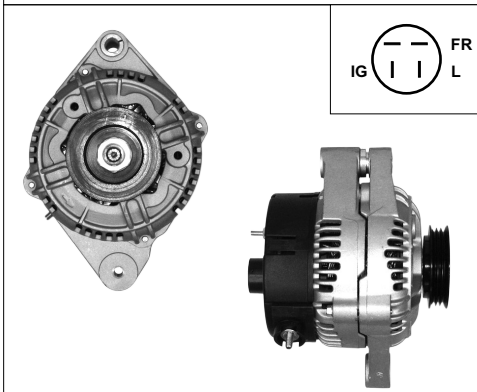

AS A0155

ORIGINAL	HC PARTS
0120485050	JA992IR
0986039670	12V 60 A
	A:90 B:58
	C:

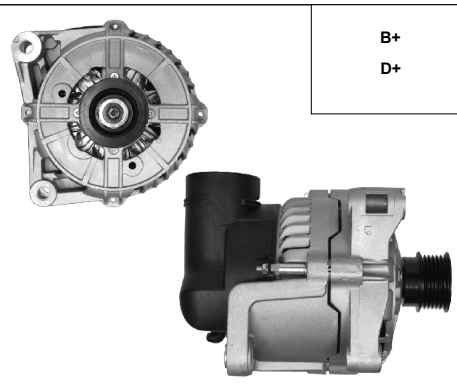

AS A0156

ORIGINAL	HC PARTS
0120465031	CA1092IR
0986039000	12V 140A
	A:69 B:28
	C:76

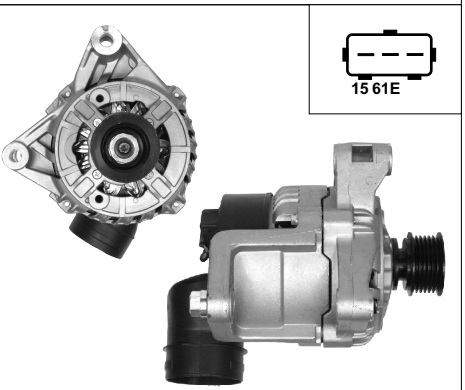

AS A0157

ORIGINAL	HC PARTS
0123315013	CA1256IR
0123325010	12V 90A
	A:68.5 B:28
	C:76

ALTERNATORS
BOSCH

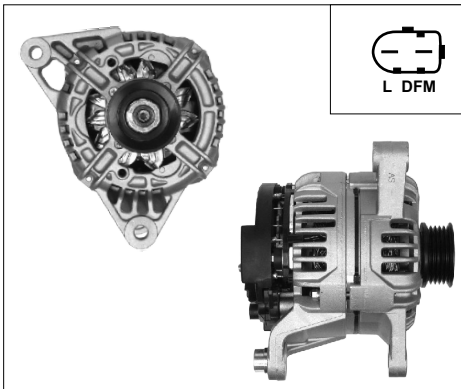

L DFM

AS A0158

ORIGINAL
0123315014
0986042640

HC PARTS
CA1586IR
12V 70A
A:34.5 B:14
C:82

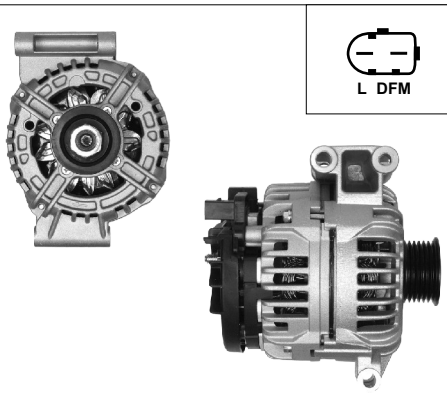

L DFM

AS A0159

ORIGINAL
0124325108

HC PARTS
CA1867IR
12V 100A
A:21 B:81.5
C:44

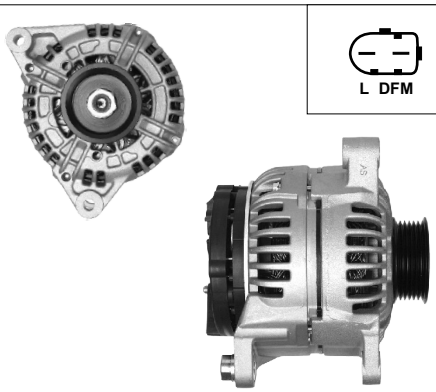

L DFM

AS A0160

ORIGINAL
0124615007

HC PARTS
CA1813IR
12V 150A
A:30 B: 14
C: 82

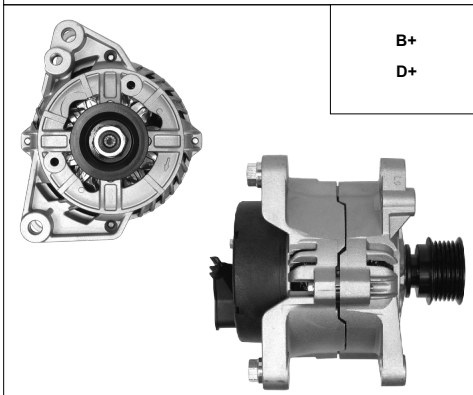

B+
D+

AS A0161

ORIGINAL
0123320012
0986040380
9123320012

HC PARTS
CA1261IR
12V 90A
A:47 B:20
C:73

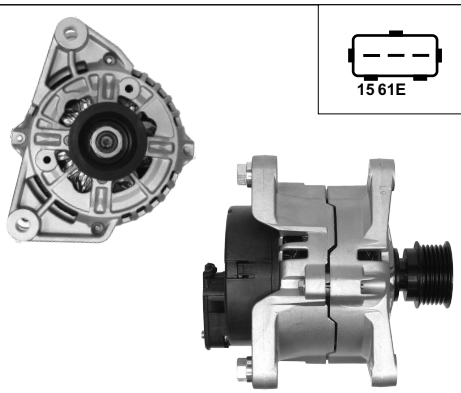

15 61E

AS A0162

ORIGINAL
0123325011
0123325015
0986041190

HC PARTS
CA1569IR
12V 90A
A:47 B:20
C:73.5

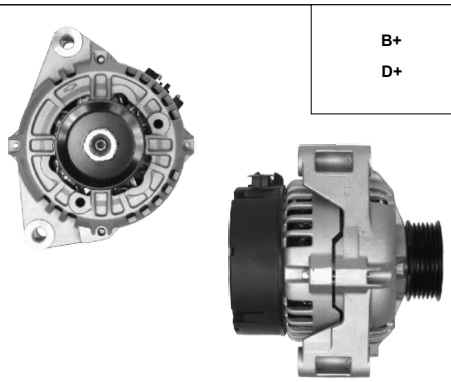

B+
D+

AS A0163

ORIGINAL
0123310010
0986039300

HC PARTS
CA1043IR
12V 80A
A:91.5 B:56
C:

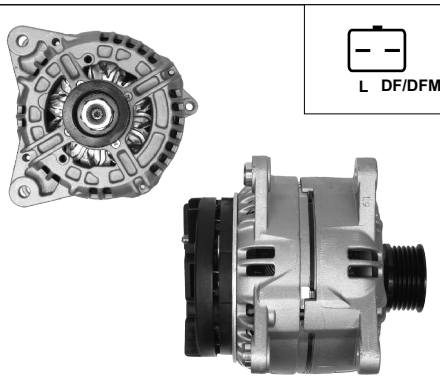

L DF/DFM

AS A0164

ORIGINAL
0124525043
0124525049
0986046250

HC PARTS
CA1824IR
12V 150A
A:32.5 B:14.5
C:61

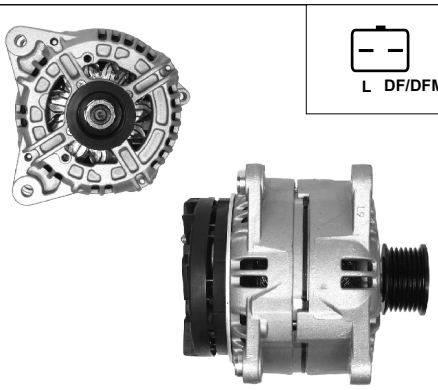

L DF/DFM

AS A0165

ORIGINAL
0124525044
0986046260

HC PARTS
CA1827IR
12V 150A
A:32.5 B:14
C:61

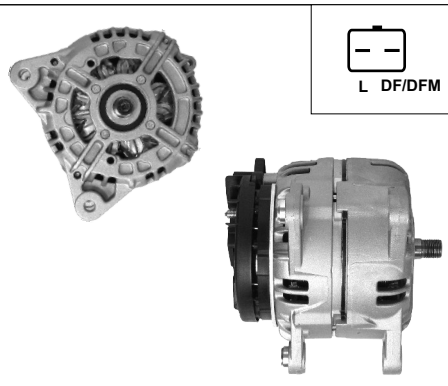

L DF/DFM

AS A0166

ORIGINAL
0124525028

HC PARTS
CA1823IR
12V 150A
A:42.5 B:14.5
C:61.5

A, B, C - page 5

Electric conections - page 4

ALTERNATORS
BOSCH

AS A0167

ORIGINAL
0124525047
0986046280

HC PARTS
CA1863IR
12V 150A
A:32.5 B:14
C:61

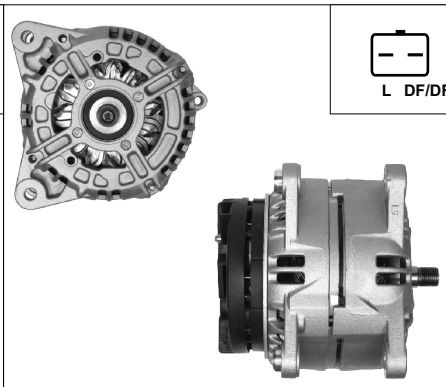

AS A0168

ORIGINAL
0124525082

HC PARTS
CA1876IR
12V 150A
A:38 B:14.5
C:60.5

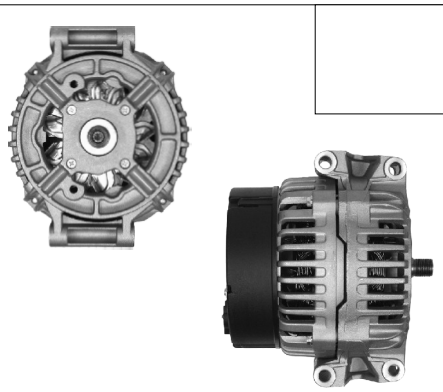

AS A0169

ORIGINAL
0123520023
0124615015
0124615019

HC PARTS
CA1630IR
12V 150A
A:32 B:70
C:

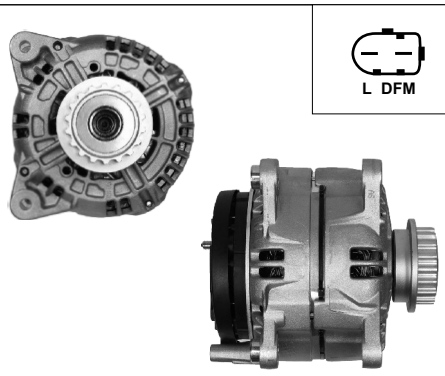

AS A0170

ORIGINAL
0124615031
070903024A

HC PARTS
CA1819IR
12V 150A
A:40 B:14.5
C:61

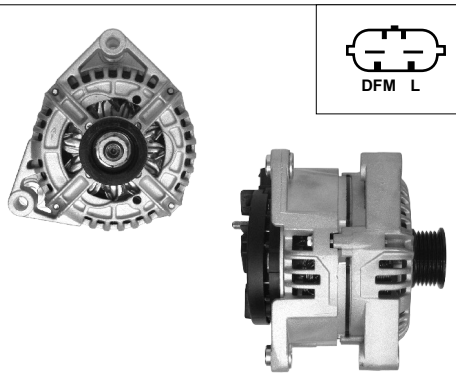

AS A0171

ORIGINAL
0124515032

HC PARTS
CA1582IR
12V 120A
A:50.5 B:33.5
C:57

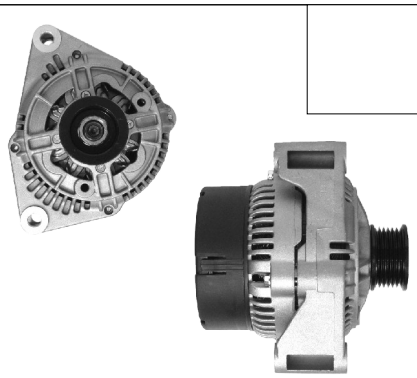

AS A0172

ORIGINAL
0123320060
0123335008
0986039350

HC PARTS
CA1301IR
12V 90A
A:82.5 B:56
C:

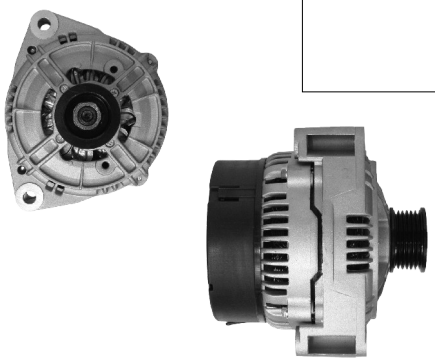

AS A0173

ORIGINAL
0123510022
0123510050
0123510068
0986039370

HC PARTS
CA1300IR
12V 115A
A:82.5 B:56
C:

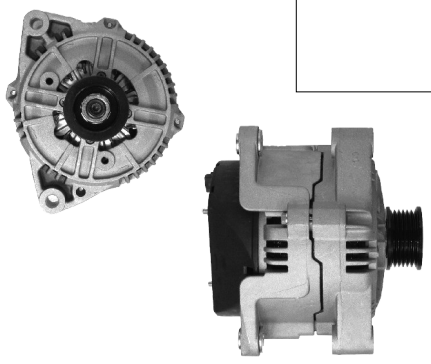

AS A0174

ORIGINAL
0123510043
0986044000

HC PARTS
CA1328IR
12V 120A
A:50.5 B:33
C:57

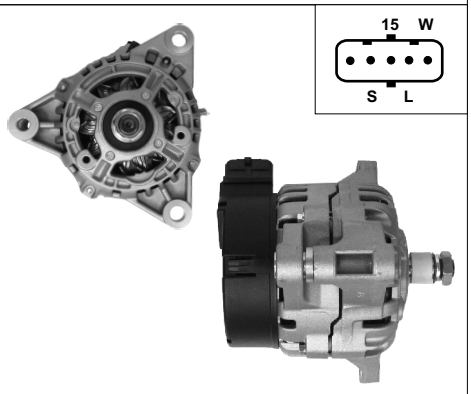

AS A0175

ORIGINAL
0123325500
0986042580

HC PARTS
CA1695IR
24V 55A
A: B:78.5
C:

A, B, C - page 5

Electric conections - page 4

ALTERNATORS
BOSCH

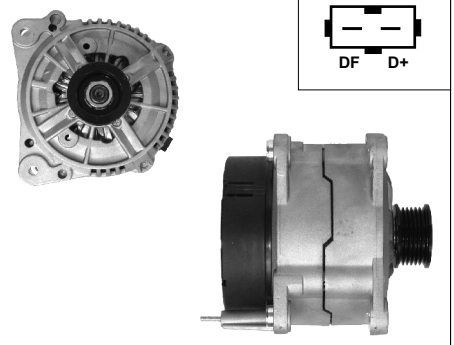

AS A0176

ORIGINAL	HC PARTS
0123510027	CA1341IR
	12V 120A
	A:30 B:14
	C:61

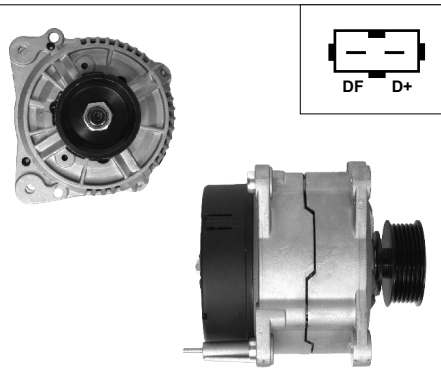

AS A0177

ORIGINAL	HC PARTS
0123515028	CA1204IR
0986040270	12V 115A
	A:40 B:14
	C:61

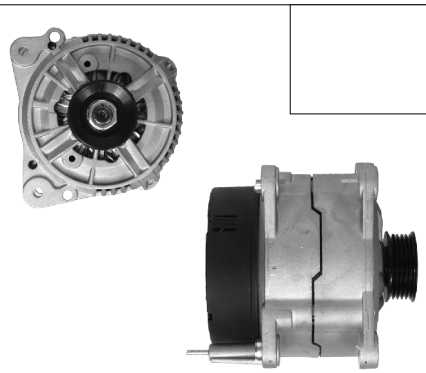

AS A0178

ORIGINAL	HC PARTS
0123515008	CA1403IR
0986040600	12V 120A
	A:30 B:14.5
	C:61

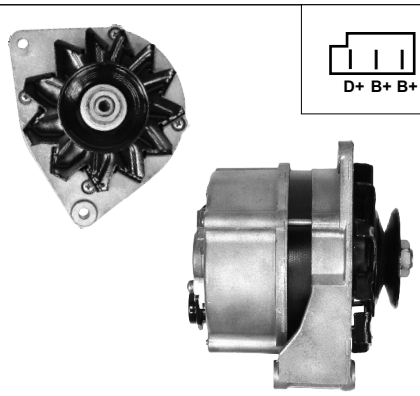

AS A0179

ORIGINAL	HC PARTS
0120488118	CA593IR
0120488119	12V 90A
0986036520	A:47 B:20
	C:73

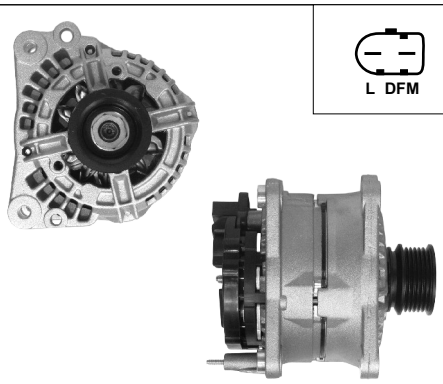

AS A0180

ORIGINAL	HC PARTS
0124325096	CA1818IR
0124325129	12V 110A
0986045330	A:38 B:14.5
	C:60.5

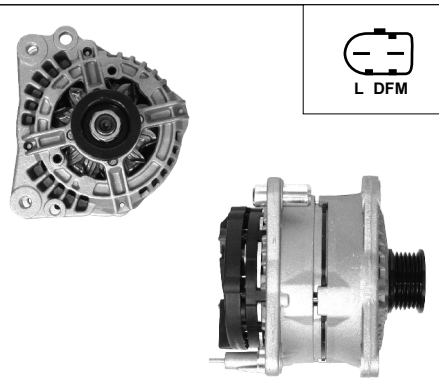

AS A0181

ORIGINAL	HC PARTS
0124325044	CA1817IR
0124325095	12V 110A
0124325128	A:30 B:14
0986045320	C:61.5

AS A0182

ORIGINAL	
0124525002	
6004ML0000	12V 132A
6004ML0001	A:27 B:12
	C:68

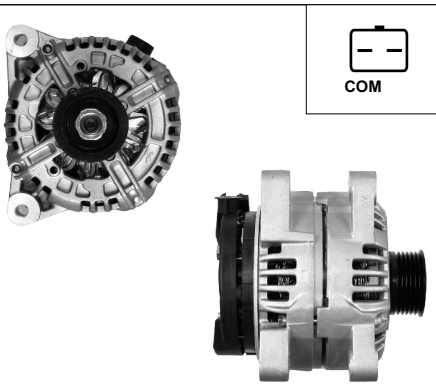

AS A0183

ORIGINAL	HC PARTS
0124525063	CA1914IR
	12V 150A
	A:42.5 B:21
	C:45.5

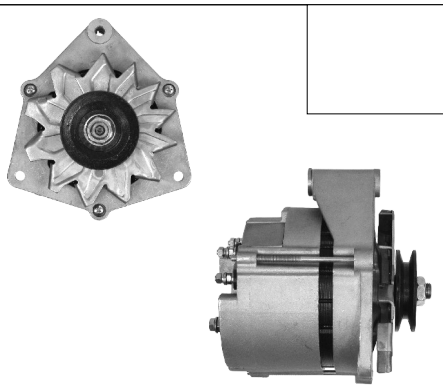

AS A0184

ORIGINAL	HC PARTS
0120400640	CA180
0120400694	24V 27A
0120400791	A:79 B:56
0986030290	C:

A, B, C - page 5

Electric conections - page 4

ALTERNATORS
BOSCH

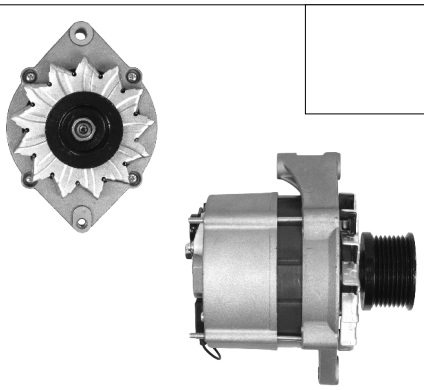

AS A0185

ORIGINAL	CARGO
0120488206	112170
0120488294	24V 50A
0120489481	A:78.5 B:51
	C:

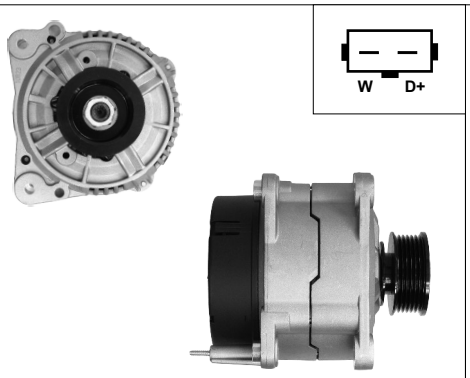

AS A0186

ORIGINAL	HC PARTS
0123510026	CA1229IR
0123515016	12V 120A
0986040360	A:39 B:14
	C:61

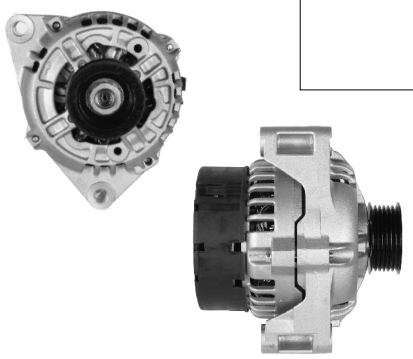

AS A0187

ORIGINAL	HC PARTS
0123320035	CA1500IR
0123320058	12V 90A
0986039860	A:92 B:56
0986044370	C:

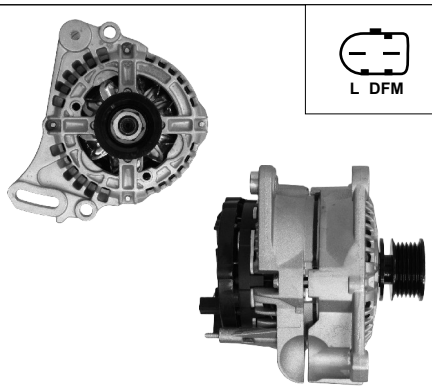

AS A0188

ORIGINAL	HC PARTS
0124325015	CA1560IR
0124325033	12V 90A
0986041310	A:39 B:14
	C:61

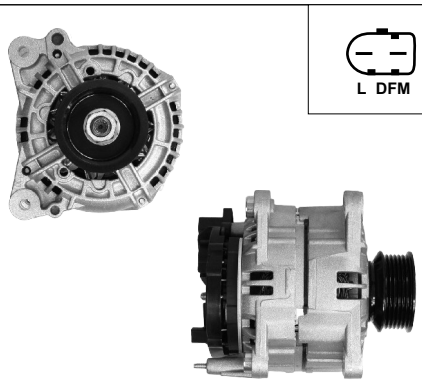

AS A0189

ORIGINAL	HC PARTS
0124515035	CA1549IR
0124515057	12V 120A
0986041900	A:39 B:14
	C:61

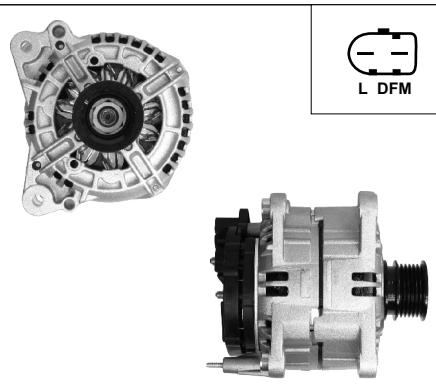

AS A0190

ORIGINAL	HC PARTS
0124525039	CA1782IR
0124525050	12V 140A
	A:39 B:14
	C:61.5

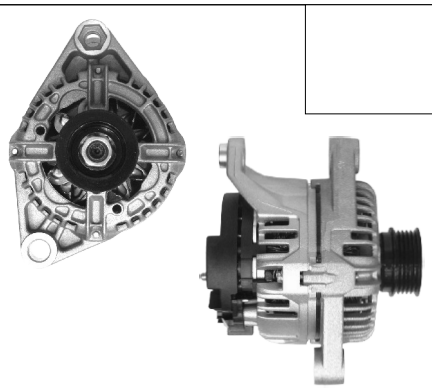

AS A0191

ORIGINAL	HC PARTS
0124325059	CA1648IR
0124415012	12V 105A
0986042760	A:58.5 B:25
	C:70.5

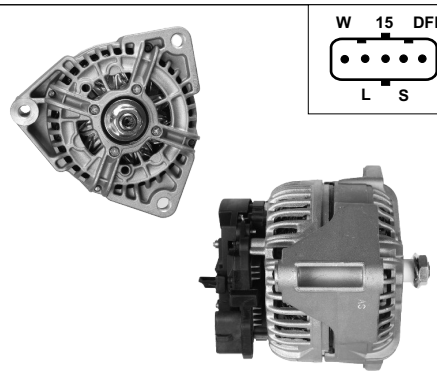

AS A0192

ORIGINAL	HC PARTS
0124555014	CA1847IR
0986047430	24V 80A
	A: B:80
	C:

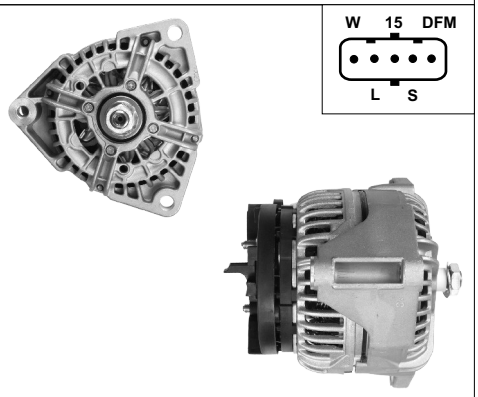

AS A0193

ORIGINAL	HC PARTS
0124555013	CA1870IR
0986047420	24V 55A
	A: B:78.5
	C:

A, B, C - page 5

Electric conections - page 4

ALTERNATORS
BOSCH

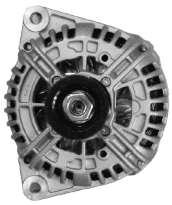

L DFM

AS A0194

ORIGINAL	HC PARTS
0124615012	CA1776IR
0124615044	12V 150A
0986043670	A:82 B:56.5
0986047550	C:

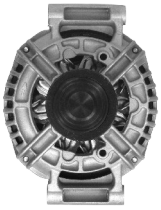

L DFM

AS A0195

ORIGINAL	HC PARTS
0124515059	CA1754IR
0986046160	12V 120A
	A:27.5 B:70
	C:57

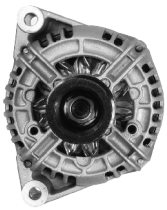
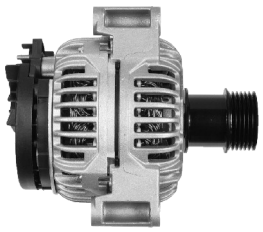

AS A0196

ORIGINAL	HC PARTS
0124525016	CA1683IR
0986046190	12V 140A
	A:118 B:56
	C:

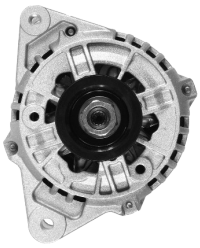
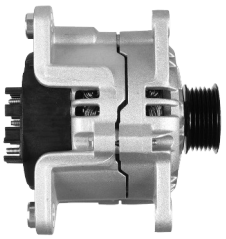
B+ D+ DF

AS A0197

ORIGINAL	HC PARTS
0123310023	CA1087IR
0123310050	12V 70A
0123310054	A:33 B:14.5
0986039510	C:78.5

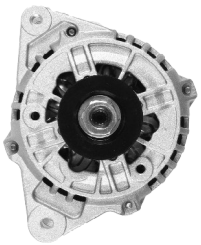
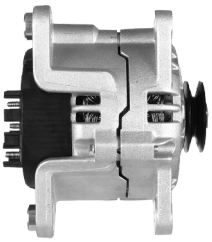
B+ D+ DF

AS A0198

ORIGINAL	HC PARTS
0123310048	CA1552IR
0123310055	12V 70A
0986044880	A:35 B:14
	C:78

L DFM

AS A0199

ORIGINAL	HC PARTS
0124625006	CA1846IR
0986046320	12V 200A
	A:31 B:70.5
	C:57

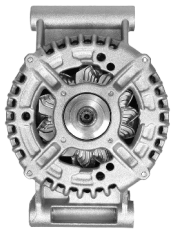
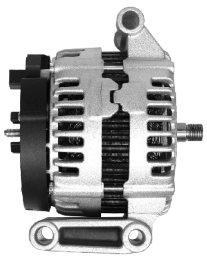
L DFM

AS A0200

ORIGINAL	HC PARTS
0121615002	CA1928IR
0986047910	12V 150A
	A:42 B:93
	C:74.5

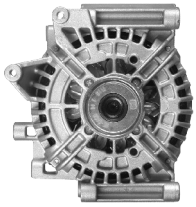

L DFM

AS A0201

ORIGINAL	HC PARTS
0124625019	CA1764IR
0986046340	12V 200A
	A:34 B:93.5
	C:35.5

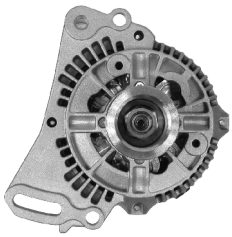

W D+

AS A0202

ORIGINAL	HC PARTS
0120485034	CA733IR
0986038070	12V 70A
	A:39.5 B:14
	C:61

ALTERNATORS
BOSCH

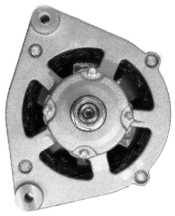
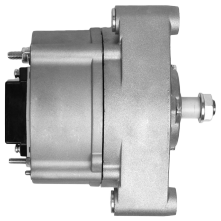

AS A0203

ORIGINAL	HC PARTS
0120469008	CA501IR
0120469030	24V 55A
0120469102	A: B:56
0120469519	C:

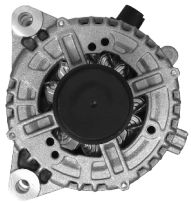
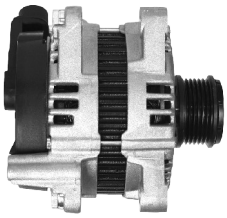

L DF/DFM

AS A0204

ORIGINAL	HC PARTS
0121715001	CA1888IR
	12V 180A
	A:41.5 B:21
	C:46

L DFM

AS A0205R

ORIGINAL	HC PARTS
01220AA0B0	CA1634IR
0986041760	12V 150A
	A: B:
R - rebuild	C:

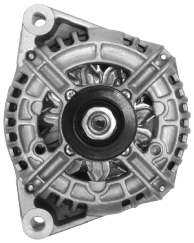
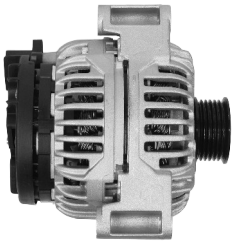

L

AS A0206

ORIGINAL	HC PARTS
0111542702	CA1656IR
0111546202	12V 120A
0124515055	A:82 B:56
0098642560	C:

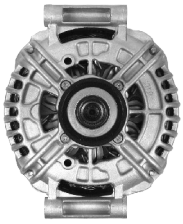

COM DFM

AS A0207

ORIGINAL	HC PARTS
0124625022	CA1840IR
0986047490	12V 200A
	A:32 B:69.5
	C:57.5

COM DFM

AS A0208

ORIGINAL	HC PARTS
0124615028	CA1775IR
0986046300	12V 150A
	A:32 B:70.0
	C:56.5

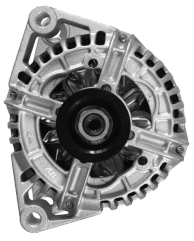
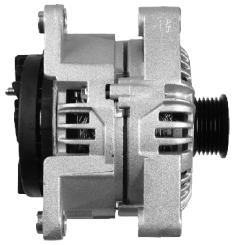

AS A0209

ORIGINAL	HC PARTS
0124525030	CA1828IR
0124525040	12V 140A
0986046230	A:51 B:33.5
	C:57.5

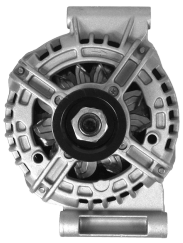
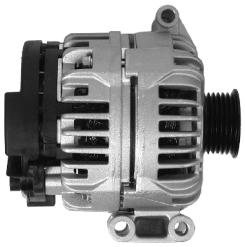

L DFM

AS A0210

ORIGINAL	HC PARTS
0124325158	CA1868IR
	12V 110A
	A:21 B:81.5
	C:44.5

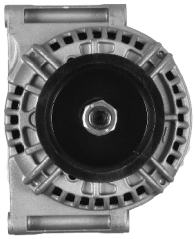

W 15 DFM
L S

AS A0211

ORIGINAL	HC PARTS
0124555018	CA1917IR
0986049320	24V 80A
	A: B:97
	C:39

A, B, C - page 5

Electric conections - page 4

ALTERNATORS
BOSCH

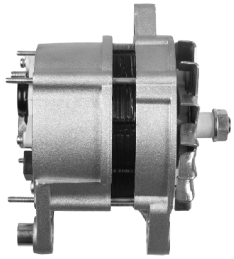

AS A0212

ORIGINAL
0120484009

CARGO
113187
12V 85A
A:42 B:17
C:70

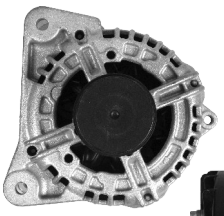

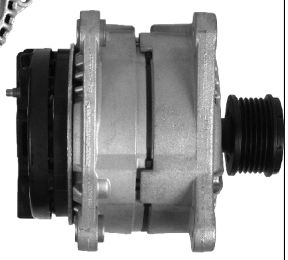

AS A0213

ORIGINAL
0124425013
0124425029
0124425037
0124425071

HC PARTS
CA1860IR
12V 120A
A:38 B:14
C:61

AS A0214R

ORIGINAL
0121813006
0131545502

12V 220A
A: B:
C:

R - rebuild

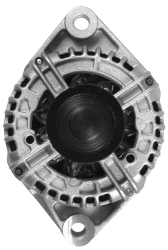
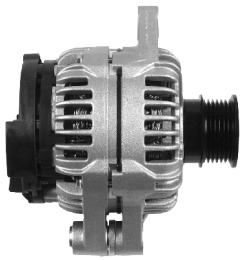

AS A0215

ORIGINAL
0124425058
0124425059

HC PARTS
CA1994IR
12V 140A
A:112.5 B:61
C:

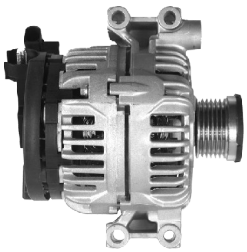

AS A0216

ORIGINAL
0124325062
0124325072

HC PARTS
CA1654IR
12V 90A
A:29 B:62.5
C:41.5

AS A0217

ORIGINAL
0124515098

HC PARTS
CA1660IR
12V 120A
A:30 B:63.0
C:42

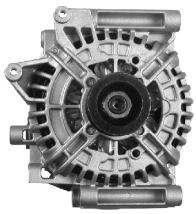
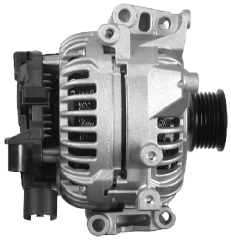

AS A0218

ORIGINAL
0124625002
0986045420

HC PARTS
CA1701IR
12V 200A
A:31 B:93.5
C:56

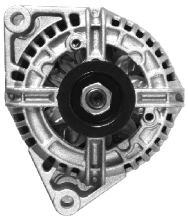
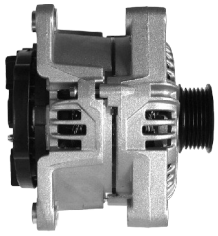

AS A0219

ORIGINAL
0124515049

HC PARTS
CA1731IR
12V 120A
A:50.5 B:33.5
C:55

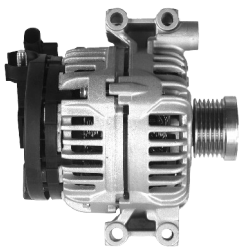

AS A0220

ORIGINAL
0124325087
0124325116
0986046130

HC PARTS
CA1773IR
12V 110A
A:30 B:63
C:41

A, B, C - page 5

Electric conections - page 4

ALTERNATORS
BOSCH

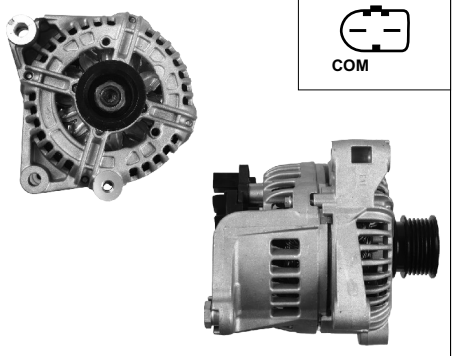

AS A0221

ORIGINAL	HC PARTS
0124525026	CA1825IR
0124525080	12V 150A
0986046220	A:68.5 B:28
0986047400	C:77.5

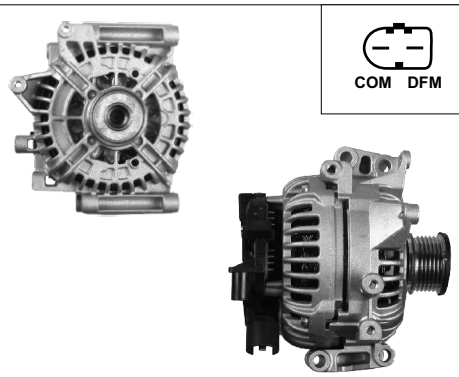

AS A0222

ORIGINAL	HC PARTS
0124625014	CA1859IR
0124625045	12V 200A
0986046330	A:30.5 B:93
0986048550	C:55.5

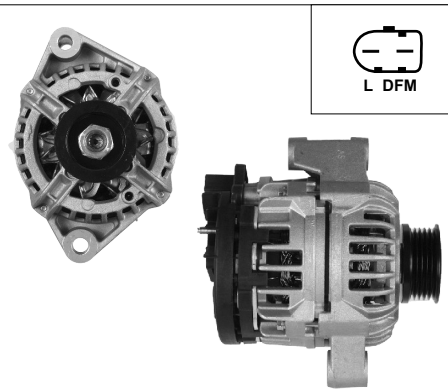

AS A0223

ORIGINAL	HC PARTS
0124225020	CA2024IR
0124225037	12V 85A
0986044490	A:90 B:58
	C:

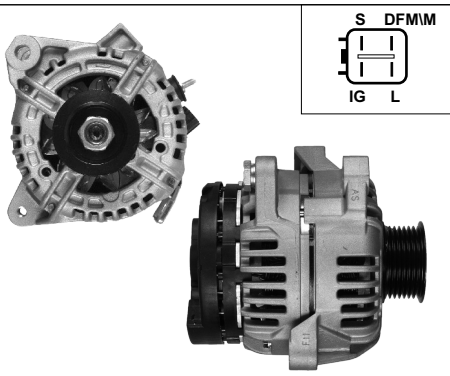

AS A0224

ORIGINAL	HC PARTS
0124325085	CA1907IR
0986046120	12V 100A
	A:35 B:18
	C:45

AS A0225

ORIGINAL	HC PARTS
0124225018	CA1747IR
0124225041	12V 70A
0124225049	A:53.5 B:33.5
0986044210	C:57

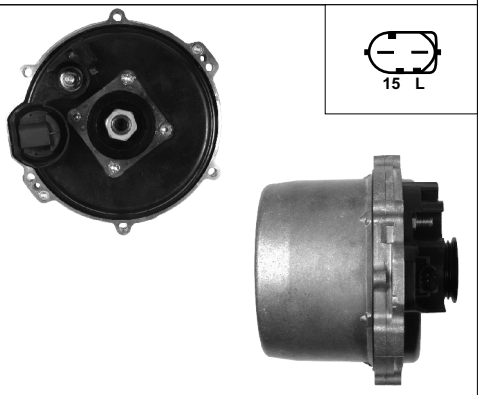

AS A0226

ORIGINAL	HC PARTS
0122468015	CA1632IR
01220AA1J0	12V 150A

Water-cooled BMW

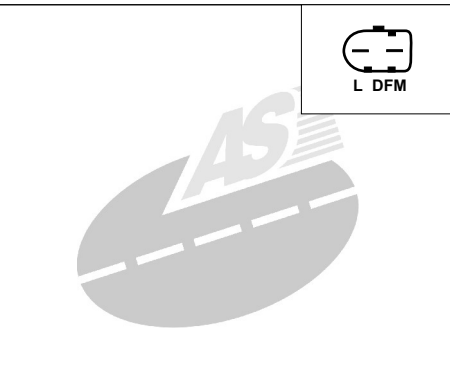

AS A0227

ORIGINAL	
0124525056	
0124525057	12V 150A
	A: B:
	C:

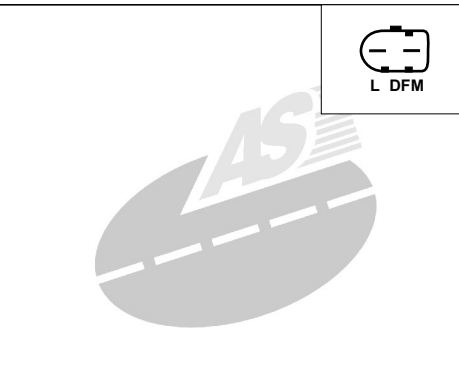

AS A0228

ORIGINAL	HC PARTS
0124510001	CA1854IR
0124515120	12V 120A
0124515113	A:47 B:14
	C:80

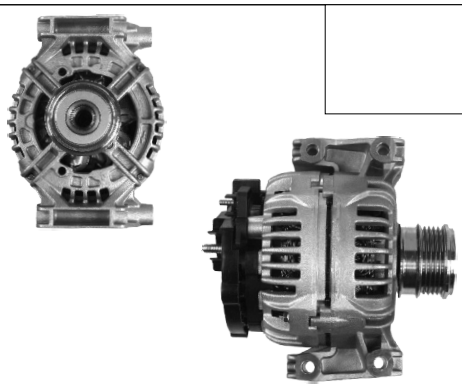

AS A0229

ORIGINAL	
0124425041	
	12V 120A
	A:34 B:89
	C:56

A, B, C - page 5

Electric conections - page 4

ALTERNATORS
DELCO

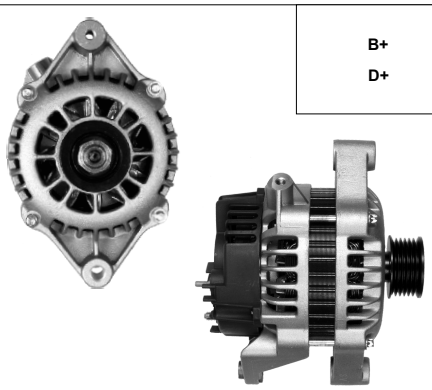

AS A1001

ORIGINAL	HC PARTS
0123505002	CA1053IR, CA1045IR
10479923	12V 100A
	A:51 B:33.5
	C:58

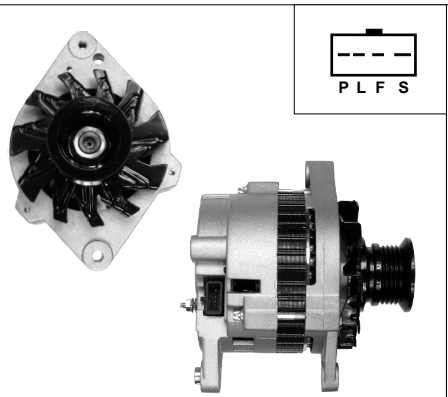

AS A1002

ORIGINAL	HC PARTS
10480000	CA1396IR
10480073	12V 75A
	A:46 B:12.5
	C:80.5

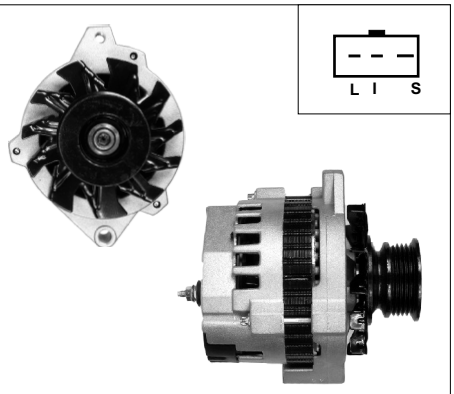

AS A1003

ORIGINAL	HC PARTS
219091	CA1386IR
96224432	12V 80A
	A:87 B:51
	C:

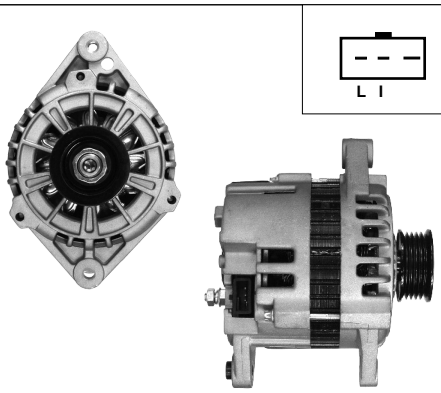

AS A1004

ORIGINAL	HC PARTS
219139	CA1671IR
96303556	12V 85A
	A:34.5 B:13
	C:80

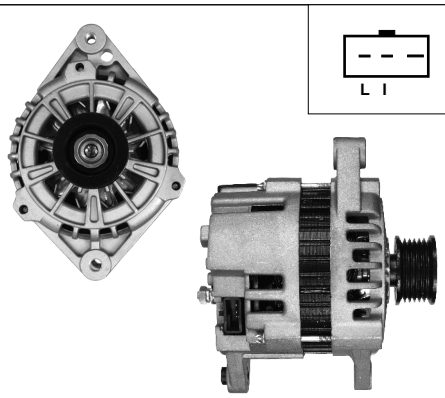

AS A1005

ORIGINAL	HC PARTS
219202	CA1672IR
219138	12V 85A
96258990	A:37 B:13
	C:81

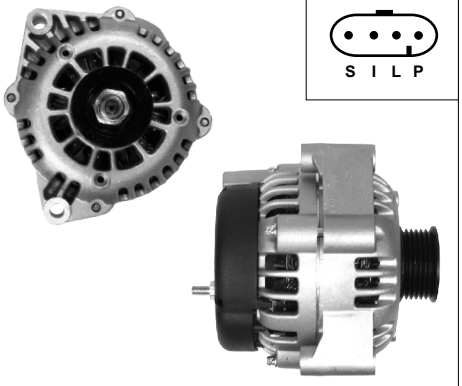

AS A1006

ORIGINAL	HC PARTS
10480167	UA1538IR
10480168	12V 105A
10480198	A:72 B:51
10480251	C:

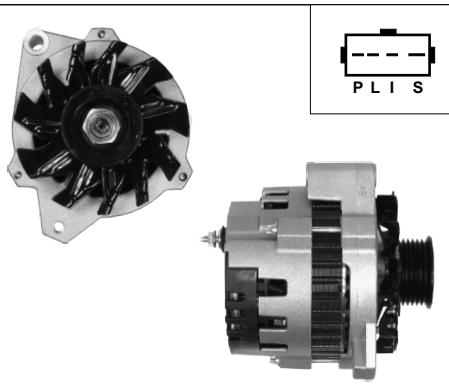

AS A1007

ORIGINAL	HC PARTS
10463013	UA938IR
10463014	12V 100A
10463016	A:74 B:51
10479817	C:

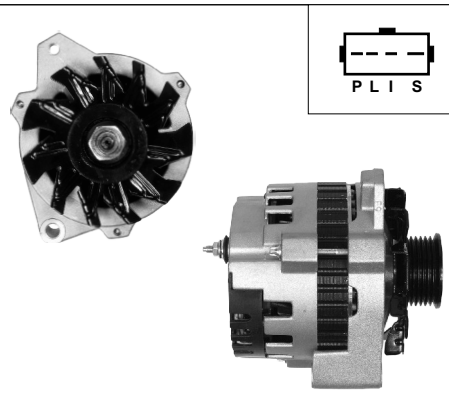

AS A1008

ORIGINAL	HC PARTS
10479906	UA939IR
10479912	12V 100A
10480028	A: B:51
10480082	C:

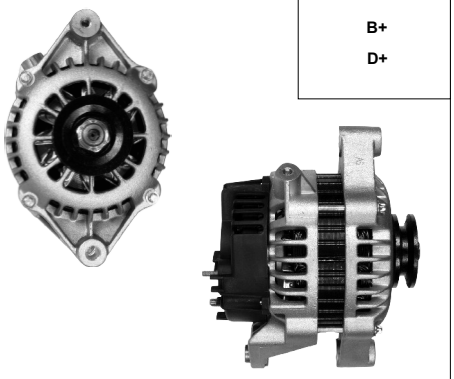

AS A1009

ORIGINAL	HC PARTS
3493273	CA1473IR
	12V 100A
	A:52.5 B:34
	C:58.5

A, B, C - page 5

Electric conections - page 4

ALTERNATORS
DELCO

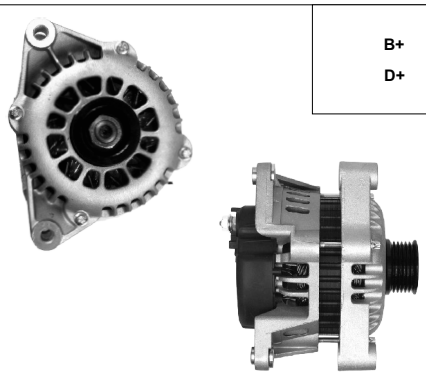

AS A1010

ORIGINAL	HC PARTS
10479914	CA1103IR
	12V 100A
	A:51 B:33.5
	C:59

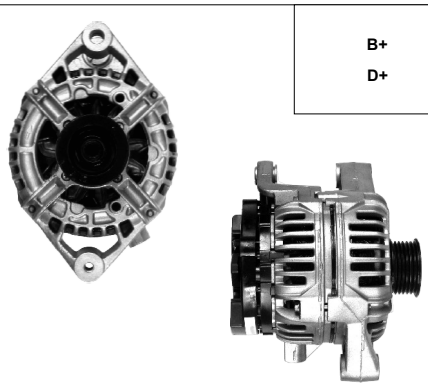

AS A1011

ORIGINAL	HC PARTS
10479225	CA1581IR
10480225	12V 100A
	A:54.5 B:33.5
	C:59

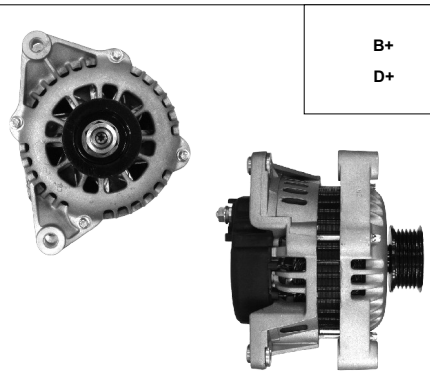

AS A1012

ORIGINAL	HC PARTS
DRA9250	CA1070IR
0123505003	12V 120A
	A:51 B:33.5
	C:59

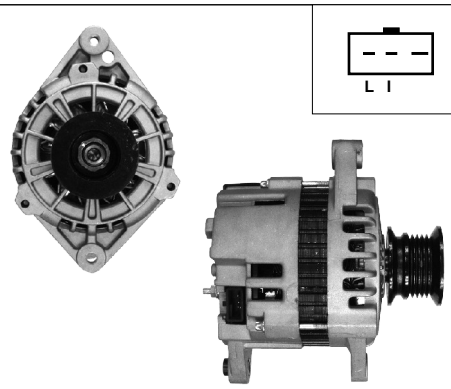

AS A1013

ORIGINAL	HC PARTS
96224431	CA1385IR
96252551	12V 80A
219187	A:46 B:12.5
	C:81

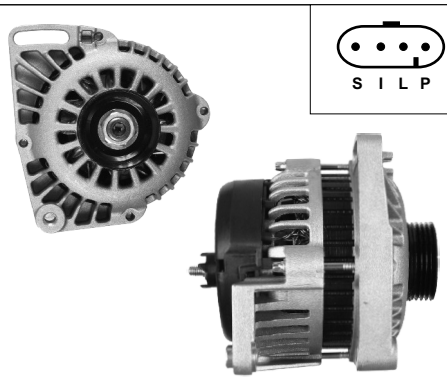

AS A1014

ORIGINAL	HC PARTS
10480462	CA1253IR
10461431	12V 75A
10480214	A:46 B:27
DRA3736	C:68

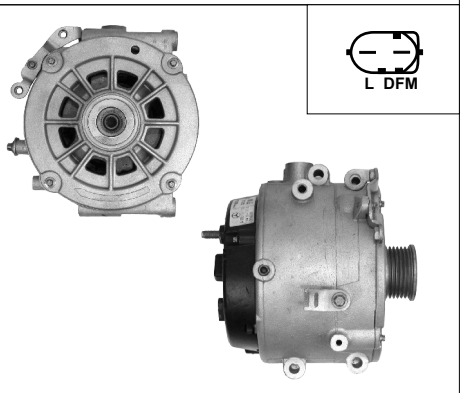

AS A1015R

ORIGINAL	HC PARTS
DRA4035	CA1838IR
10480404	12V 190A
	A:30 B:
R - rebuild	C:57

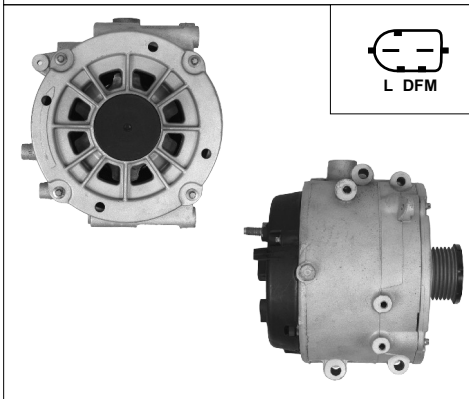

AS A1016R

ORIGINAL	HC PARTS
10480403	CA1677IR
10480407	12V 190A
	A:33 B:94
R - rebuild	C:

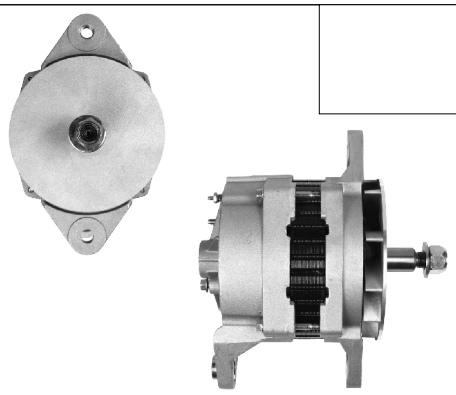

AS A1017

ORIGINAL	CARGO
19020309	113155
10459216	12V 130A
10459360	A: B:13
19020356	C:101.5

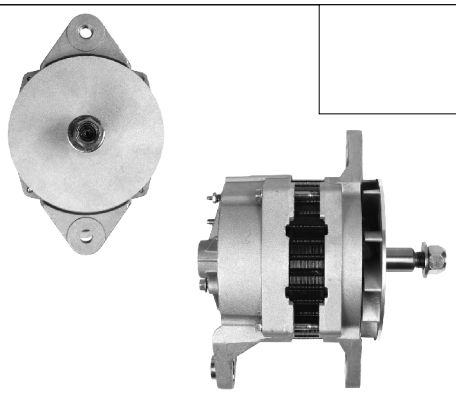

AS A1018

ORIGINAL	HC PARTS
1117900	UA1620IR
19010111	24V 70A
19010182	A: B:14.5
19010185	C:101.5

A, B, C - page 5

Electric conections - page 4

ALTERNATORS
HITACHI

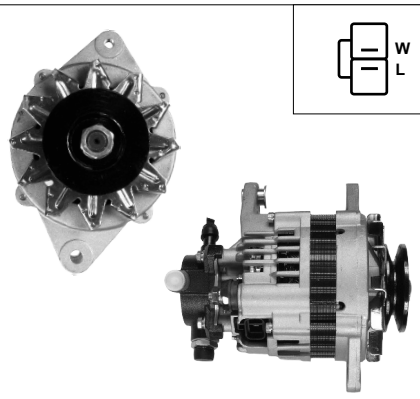

AS A2001

ORIGINAL	HC PARTS
LR170-505	JA1172IR
LR170-505B	12V 70A
LR170-511	A:42 B:13
	C:81

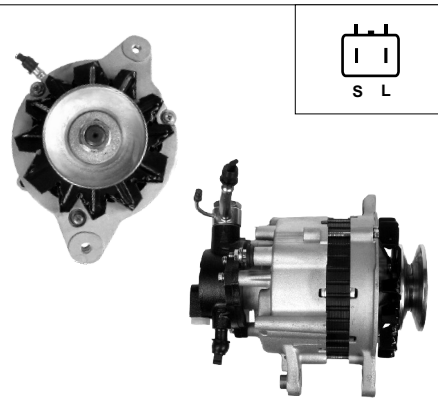

AS A2002

ORIGINAL	HC PARTS
AD165206	JA1366IR
AD165320	12V 65A
AD165321	A:45 B:13
	C:54

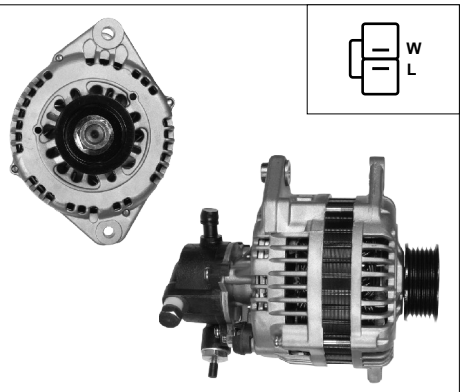

AS A2003

ORIGINAL	HC PARTS
LR1100-502	JA1521IR
LR1100-502E	12V 100A
LR1100-502F	A:36 B:13
LR1100-504C	C:67

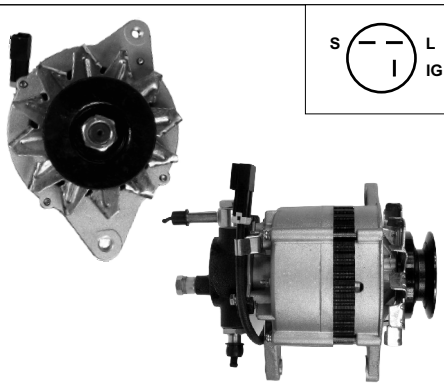

AS A2004

ORIGINAL	HC PARTS
LR150-441	JA761IR
LR150-441C	12V 50A
	A:48 B:13
	C:80

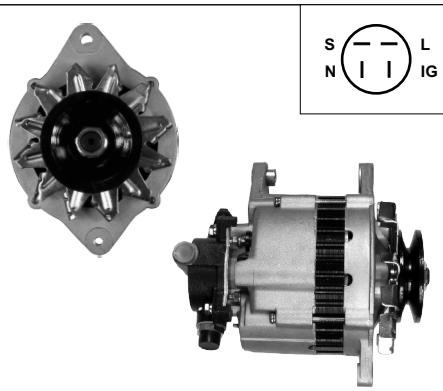

AS A2005

ORIGINAL	HC PARTS
LR170-420	JA863IR
LR170-427	12V 70A
	A:43 B:13
	C:80

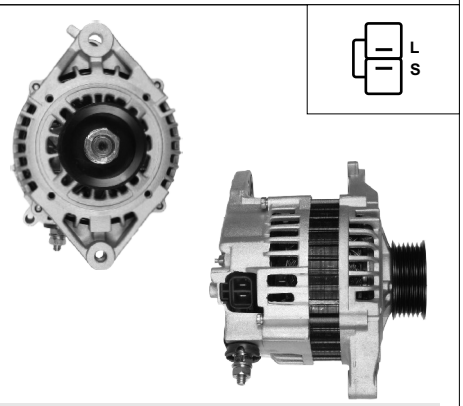

AS A2006

ORIGINAL	HC PARTS
LR180-762	JA1607IR
LR180-768	12V 80A
	A:38 B:13
	C:81

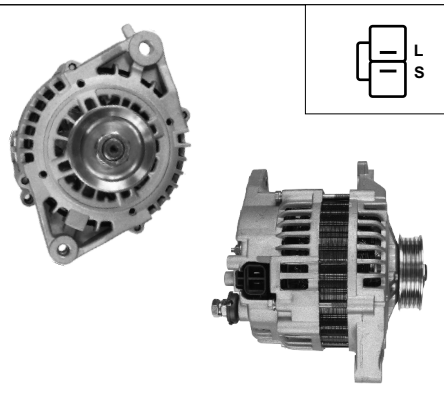

AS A2007

ORIGINAL	HC PARTS
LR170-746	JA1182IR
LR170-750	12V 70A
	A:38.5 B:13
	C:81.5

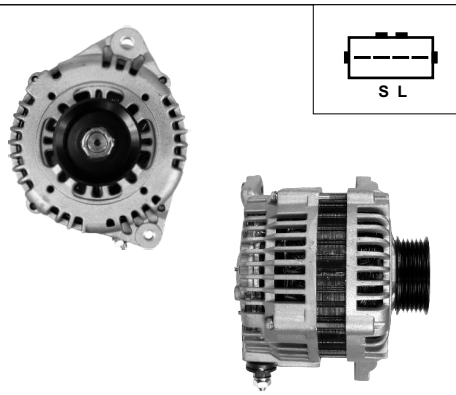

AS A2008

ORIGINAL	HC PARTS
LR1110-705	JA990IR
LR1110-709	12V 110A
	A:39 B:13
	C:80.7

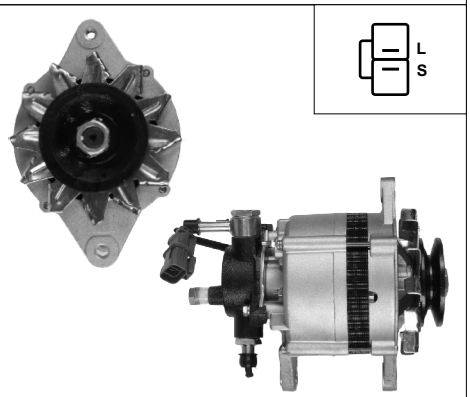

AS A2009

ORIGINAL	HC PARTS
LR170-717	JA769IR
LR170-502	12V 70A
	A:42 B:13
	C:80

A, B, C - page 5

Electric conections - page 4

ALTERNATORS
HITACHI

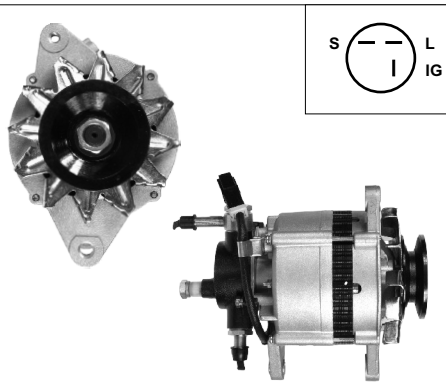

AS A2010

ORIGINAL	HC PARTS
LR225-408	JA1171IR
LR225-409E	24V 25A
	A:45.5 B:13
	C:80

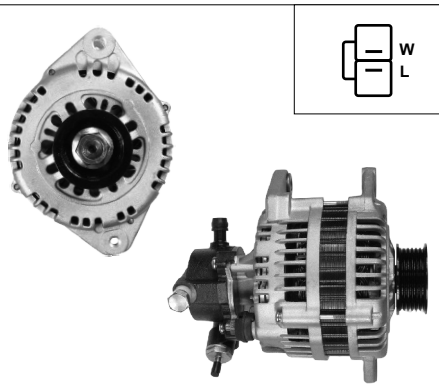

AS A2011

ORIGINAL	HC PARTS
LR170-509	JA1526IR
	12V 70A
	A:36 B:13
	C:69

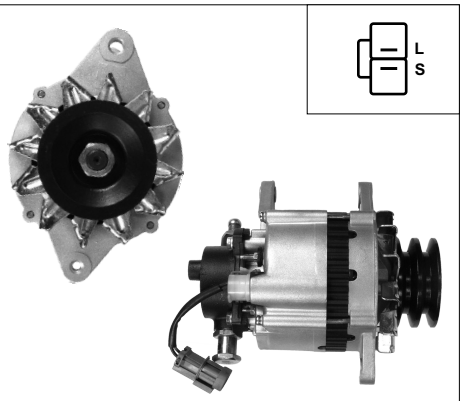

AS A2012

ORIGINAL	HC PARTS
LR150-428	JA660IR
LR150-443	12V 50A
	A:43 B:13
	C:80

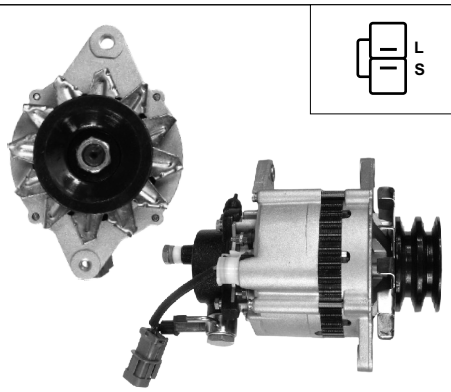

AS A2013

ORIGINAL	HC PARTS
LR235-402	JA672IR
LR23F-404	24V 35A
	A:43 B:13
	C:80

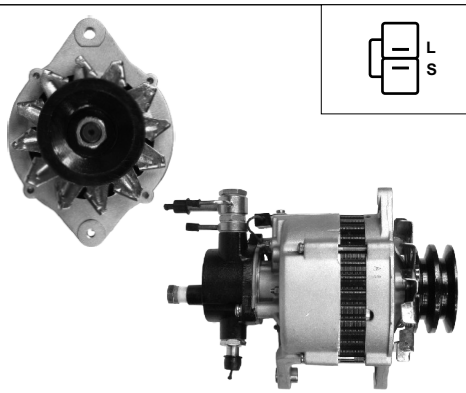

AS A2014

ORIGINAL	HC PARTS
LR170-407	JA678IR
LR170-408	12V 70A
	A:43 B:13
	C:78

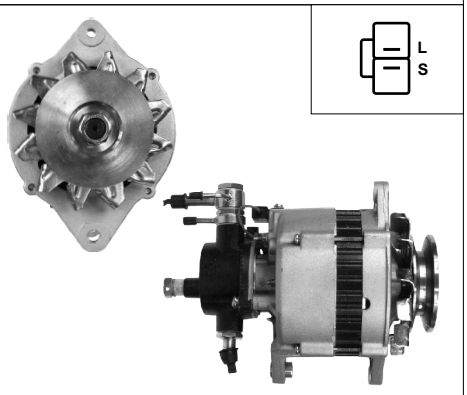

AS A2015

ORIGINAL	HC PARTS
LR170-406	JA773IR
LR170-414	12V 70A
23100-G5701	A:44 B:13
	C:80

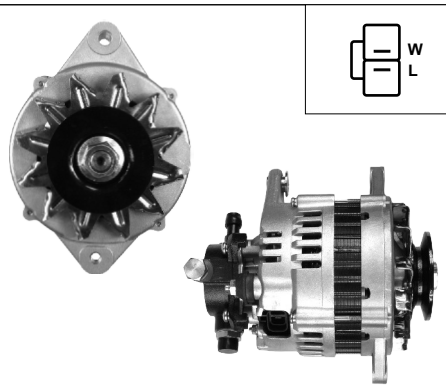

AS A2016

ORIGINAL	HC PARTS
LR1100-501	JA1370IR
LR1100-501B	12V 100A
	A:41.5 B:13
	C:74.8

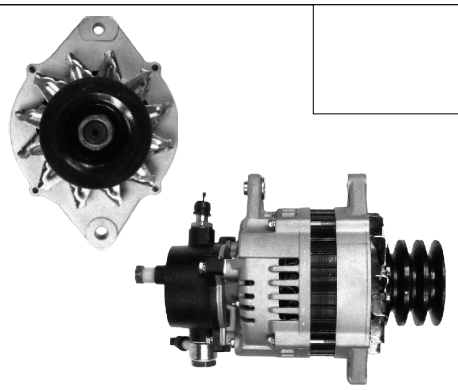

AS A2017

ORIGINAL	ISUZU
LR250-503	8-97116088-0
	24V 50A

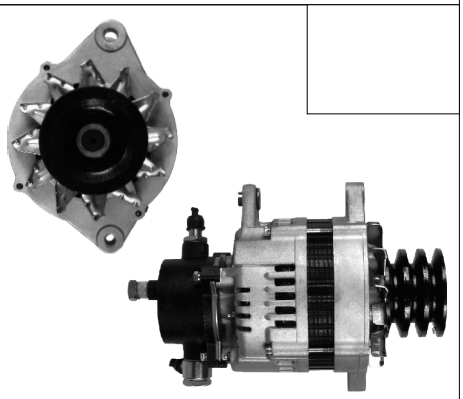

AS A2018

ORIGINAL	ISUZU
LR260-502	8-97143011-0
	24V 60A

ALTERNATORS
HITACHI

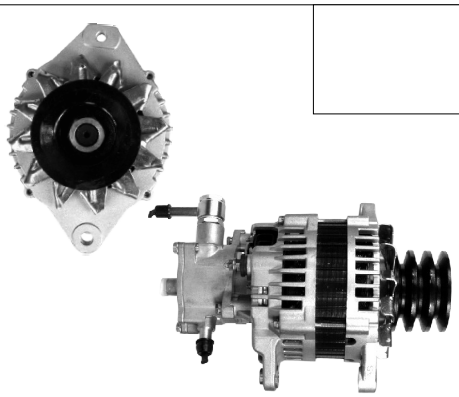

AS A2019

ORIGINAL
LR260-512

24V **75A**

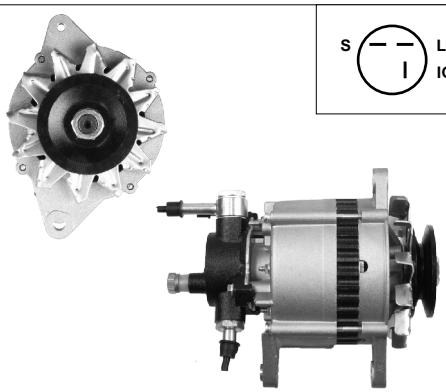

AS A2020

ORIGINAL
LR170-411

HC PARTS
JA673IR
12V **70A**
A:42 **B:13**
C:80

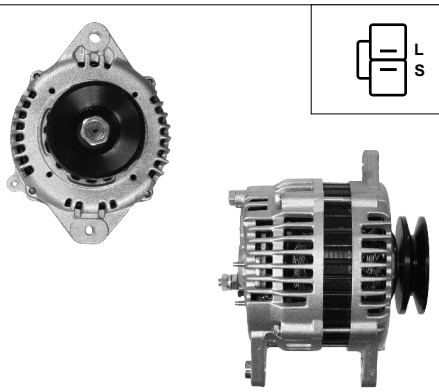

AS A2021

ORIGINAL
LR190-734E

HC PARTS
JA1528IR
12V **90A**
A:42 **B:13**
C:81

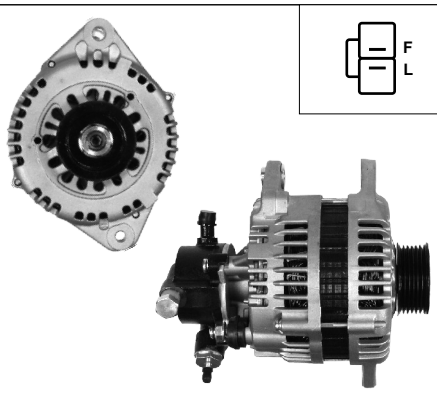

AS A2022

ORIGINAL
LR1100-508

HC PARTS
JA1899IR
12V **100A**
A:35.5 **B:13**
C:67

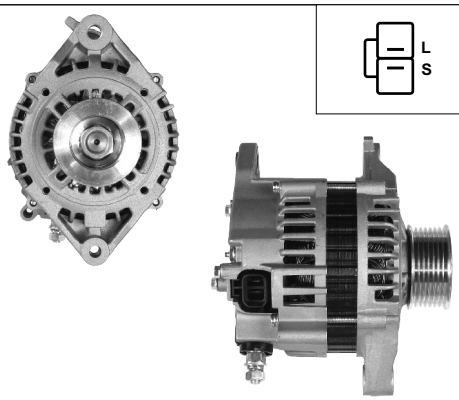

AS A2023

ORIGINAL
LR190-752

HC PARTS
JA1602IR
12V **90A**
A:37.5 **B:13**
C:80

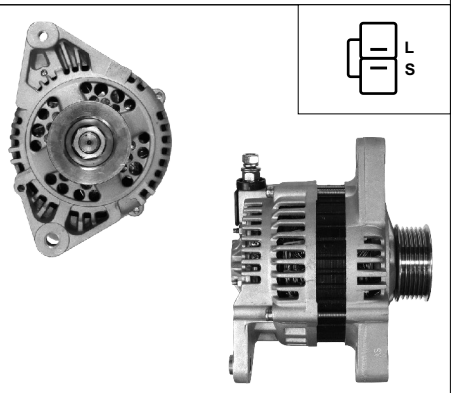

AS A2024

ORIGINAL
LR180-725

HC PARTS
JA762IR
12V **80A**
A:38 **B:25**
C:82

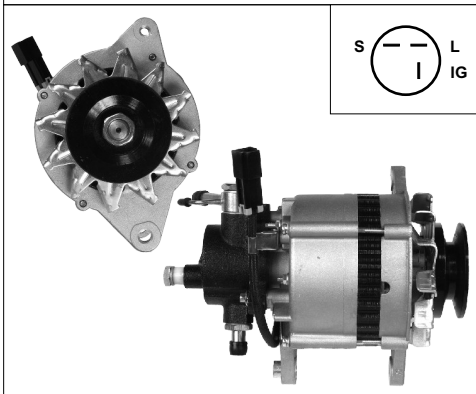

AS A2025

ORIGINAL
LR160-446

HC PARTS
JA873IR
12V **60A**
A:49 **B:13**
C:85

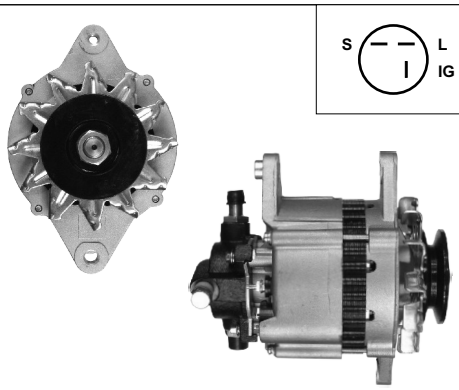

AS A2026

ORIGINAL
LR170-415

HC PARTS
JA874IR
12V **70A**
A:42 **B:13**
C:80

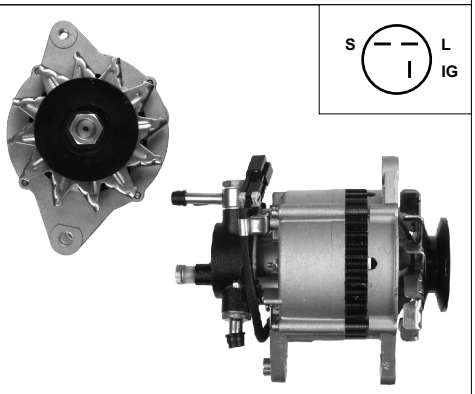

AS A2027

ORIGINAL
LR150-431
LR150-432

HC PARTS
JA680IR
12V **50A**
A:42 **B:13**
C:75

A, B, C - page 5

Electric conections - page 4

ALTERNATORS
HITACHI

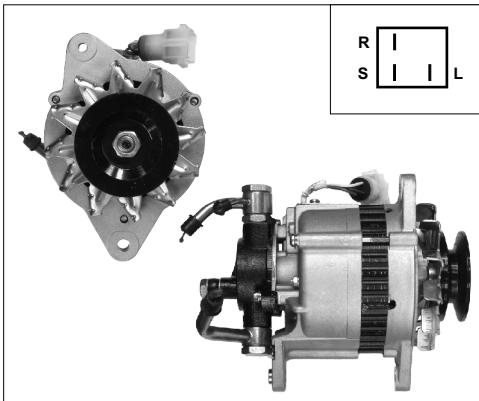

AS A2028

ORIGINAL	HC PARTS
LR150-136B	JA661IR
	12V 50A
	A:50 B:13
	C:99

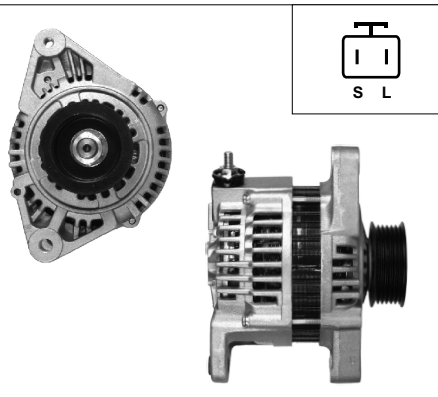

AS A2029

ORIGINAL	HC PARTS
LR190-747	JA1606IR
	12V 90A
	A:38.5 B:25
	C:80.5

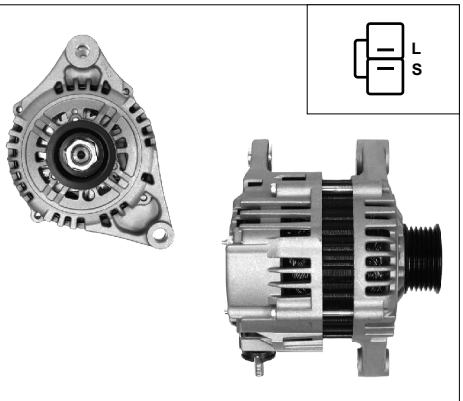

AS A2030

ORIGINAL	HC PARTS
LR165-714	JA1790IR
	12V 65A
	A:38 B:25
	C:66.5

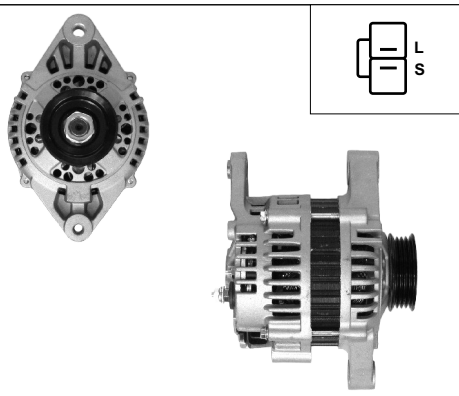

AS A2031

ORIGINAL	HC PARTS
LR165-708	JA974IR
	12V 65A
	A:38 B:25
	C:82

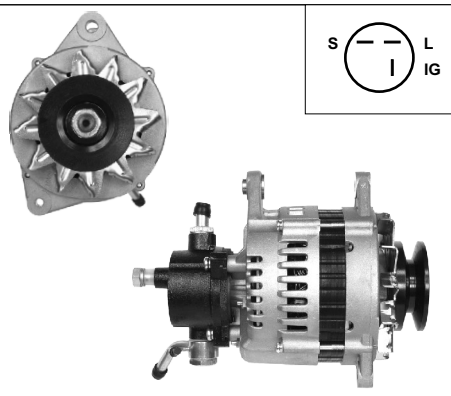

AS A2032

ORIGINAL	HC PARTS
LR180-501	JA1290IR
LR180-504	12V 80A
	A:49 B:13
	C:85

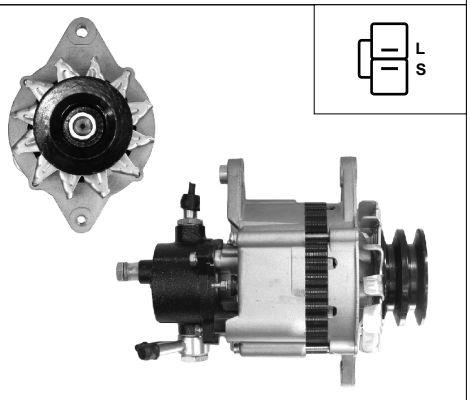

AS A2033

ORIGINAL	HC PARTS
LR160-426	JA780IR
LR160-427	12V 60A
	A:42.5 B:13
	C:78.5

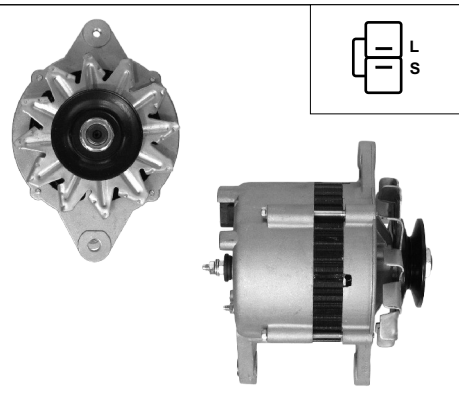

AS A2034

ORIGINAL	HC PARTS
LR160-140	JA754IR
LR160-151	12V 60A
LR160-154	A:42 B:13
LR160-168	C:80.5

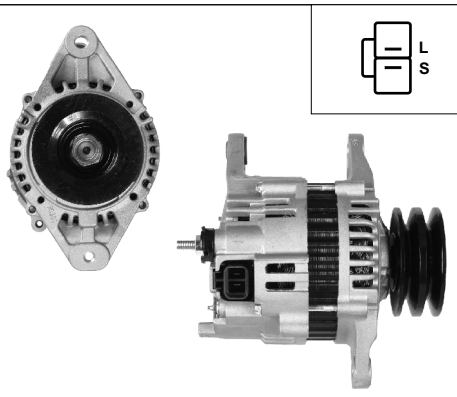

AS A2035

ORIGINAL	HC PARTS
LR160-728	JA1516IR
LR160-728C	12V 60A
LR160-728E	A:42 B:13
	C:79

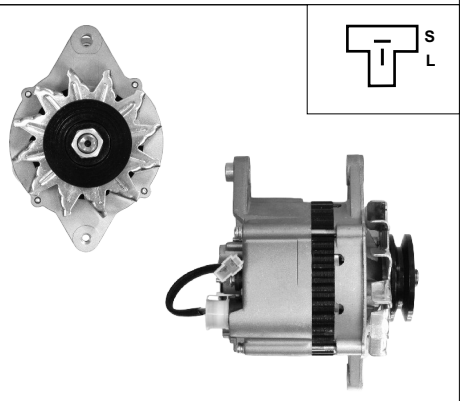

AS A2036

ORIGINAL	HC PARTS
LR150-101	JA104IR
LR150-125	12V 50A
LR150-31	A:42 B:13
LR150-35	C:80.5

ALTERNATORS
HITACHI

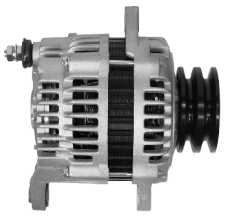

L
S

AS A2037

ORIGINAL	CARGO
LR190-750	113698
LR190-750B	12V 90A
	A:45 B:13
	C:80.5

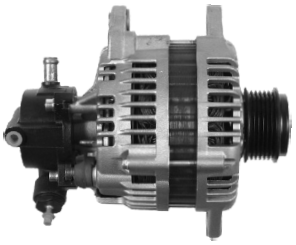

W
L

AS A2038R

ORIGINAL	HC PARTS
LR1100-503	JA1901IR
LR1100-503B	12V 100A
	A:35 B:13
R - rebuild	C:65.5

A, B, C - page 5

Electric conections - page 4

ALTERNATORS
VALEO

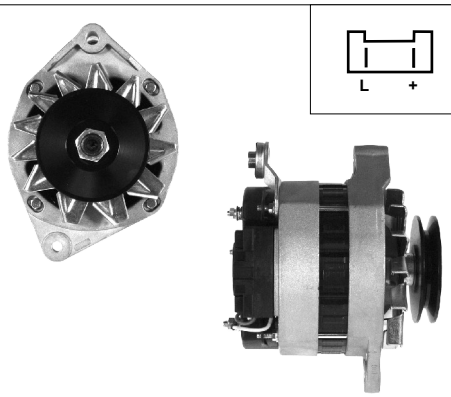

AS A3001

ORIGINAL	HC PARTS
A14N144	CA314IR
A14N163	12V 75A
A14N4	A:58 B:27
	C:66

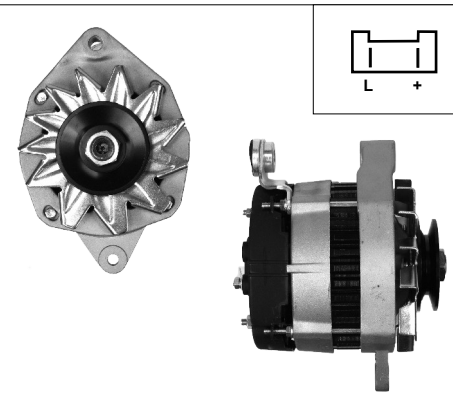

AS A3002

ORIGINAL	HC PARTS
A13N171	CA526IR
A14N62	12V 70A
	A:50 B:27
	C:66

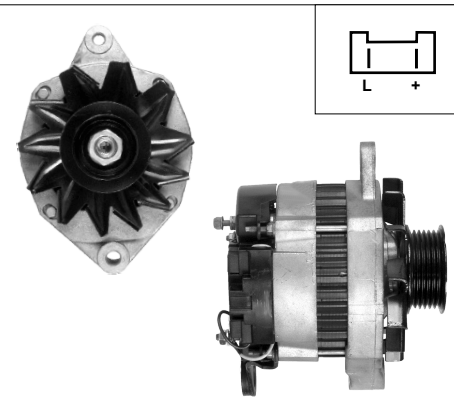

AS A3003

ORIGINAL	HC PARTS
A11VI77	CA602IR
A13N163	12V 70A
A13N164	A:47 B:27
	C:66

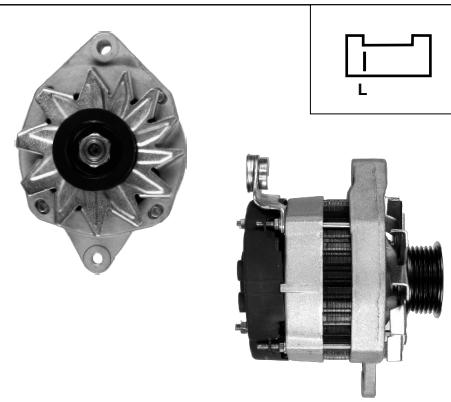

AS A3004

ORIGINAL	HC PARTS
0120489490	CA574IR
A13N178	12V 70A
A13N232	A:46.5 B:27
A13N241	C:70

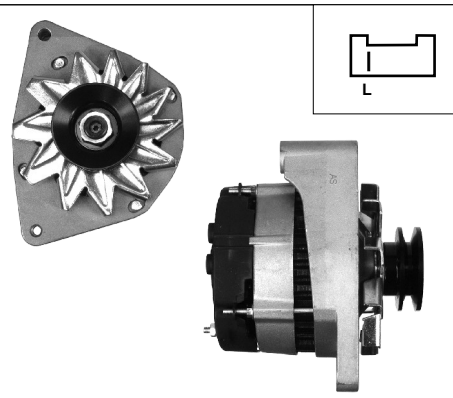

AS A3005

ORIGINAL	HC PARTS
A13N130	CA533IR
A13N176	12V 70A
A13N216	A:95 B:56
	C:

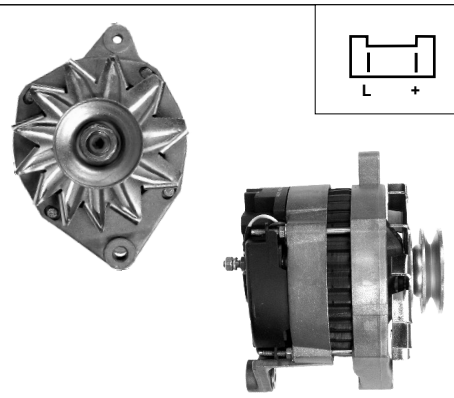

AS A3006

ORIGINAL	HC PARTS
A13N157	CA549IR
A13N203	12V 60A
	A:56 B:27
	C:67

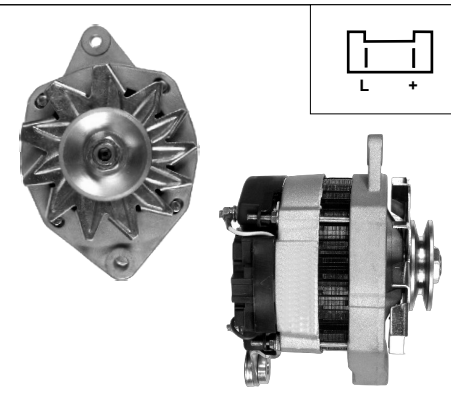

AS A3007

ORIGINAL	HC PARTS
A13N81	CA378IR
A13N88	12V 60A
	A:49 B:27
	C:66

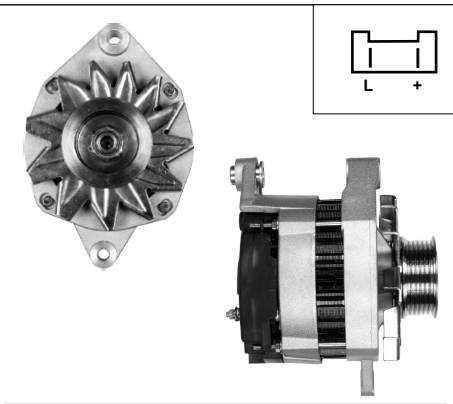

AS A3008

ORIGINAL	HC PARTS
A13N206	CA635IR
A13N209	12V 60A
	A:47 B:27
	C:72

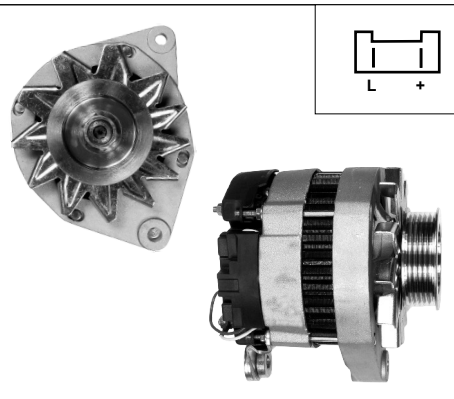

AS A3009

ORIGINAL	HC PARTS
A13N137	CA557IR
A13N160	12V 50A
A13N210	A:47 B:27
A13N27	C:68

A, B, C - page 5

Electric conections - page 4

ALTERNATORS
VALEO

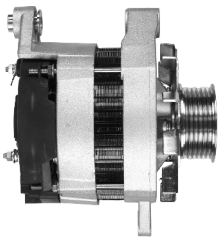

AS A3010

ORIGINAL	HC PARTS
2541460	CA849IR
A13N235	12V 70A
	A:47 B:27
	C:72

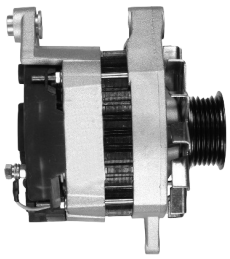

AS A3011

ORIGINAL	HC PARTS
2541524	CA605IR
A13N161	12V 70A
A13N199	A:46.5 B:27
A13N230	C:72

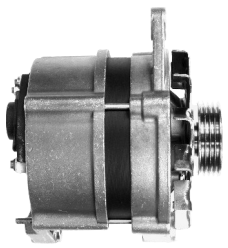
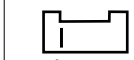

AS A3012

ORIGINAL	HC PARTS
A13N151	CA380IR
A13N177	12V 70A
A13N183	A:47 B:27
A13N220	C:73

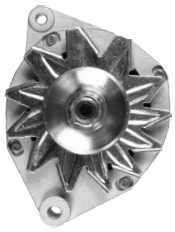
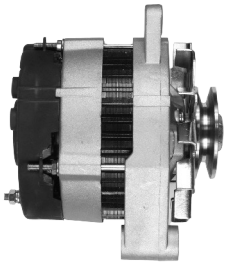

AS A3013

ORIGINAL	HC PARTS
0120489193	CA291IR
0120489194	12V 50A
A13N38	A:60 B:40
	C:

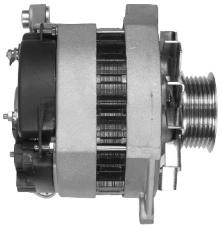
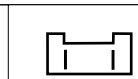

AS A3014

ORIGINAL	HC PARTS
A14N132	CA838IR
A14N164	12V 90A
	A:46 B:27
	C:67.5

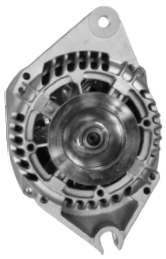
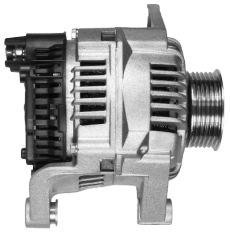
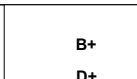

AS A3015

ORIGINAL	HC PARTS
0120335012	CA637IR
A11VI25	12V 70A
A11VI40	A:43 B:27
A11VI51	C:66

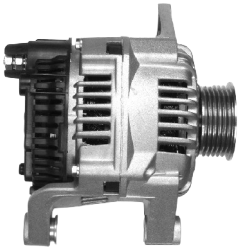

AS A3016

ORIGINAL	HC PARTS
A11VI32	CA820IR
A11VI57	12V 70A
	A:42 B:27
	C:66

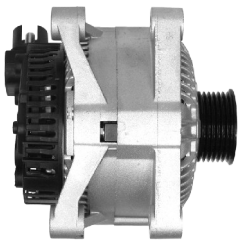
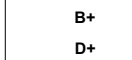

AS A3017

ORIGINAL	HC PARTS
A13VI203	CA1496IR
	12V 80A
	A:43 B:22
	C:46

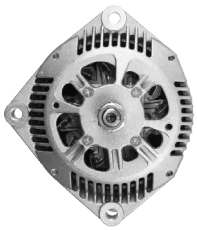
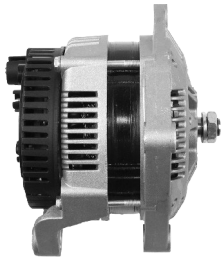
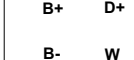

AS A3018

ORIGINAL	HC PARTS
A14VI19	CA1310IR
A14VI20	24V 90A
2541916	A: B:23.3
	C:68.2

A, B, C - page 5

Electric conections - page 4

ALTERNATORS
VALEO

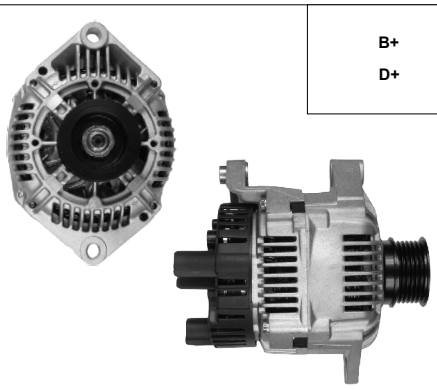

AS A3019

ORIGINAL
A13VI72

HC PARTS
CA1039IR
12V 80A
A:52.5 B:27
C:69

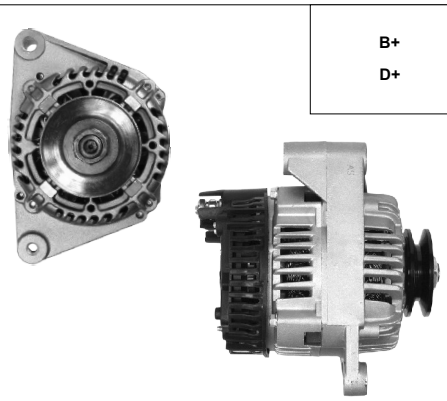

AS A3020

ORIGINAL
2541298

HC PARTS
CA618IR
12V 70A
A:95 B:56
C:

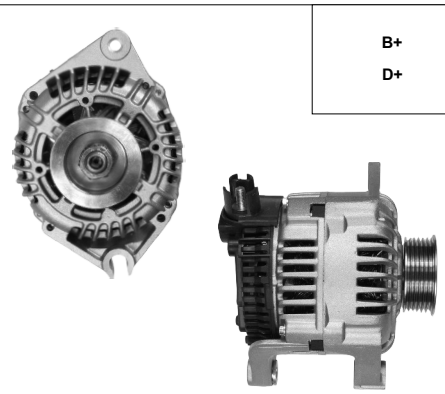

AS A3021

ORIGINAL
2541360

HC PARTS
CA639IR
12V 80A
A:43 B:27
C:66.5

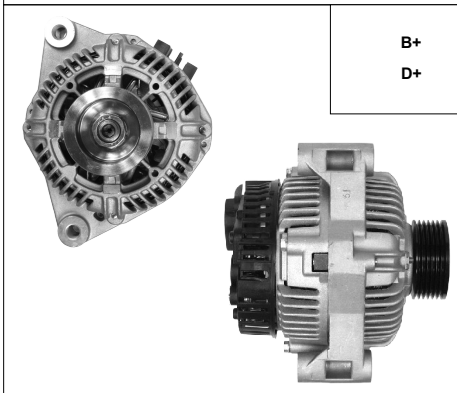

AS A3022

ORIGINAL
2541758

HC PARTS
CA1065IR
12V 95A
A:92 B:56
C:

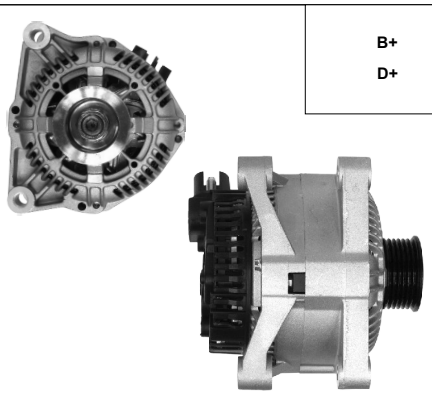

AS A3023

ORIGINAL
2541971

HC PARTS
CA1564IR
12V 90A
A:42 B:22
C:46

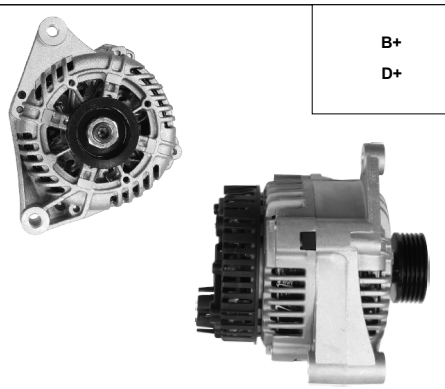

AS A3024

ORIGINAL
2541862

HC PARTS
CA1243IR
12V 90A
A:74.5 B:56
C:

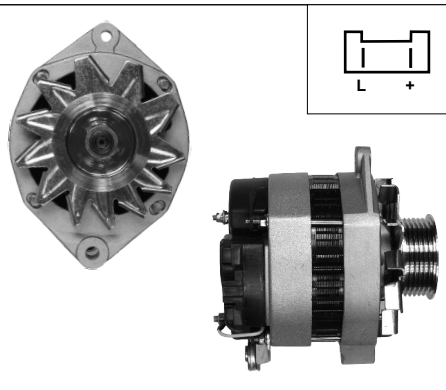

AS A3025

ORIGINAL
A14N102
436594
NA315

HC PARTS
CA831IR
12V 90A
A:47 B:27
C:69

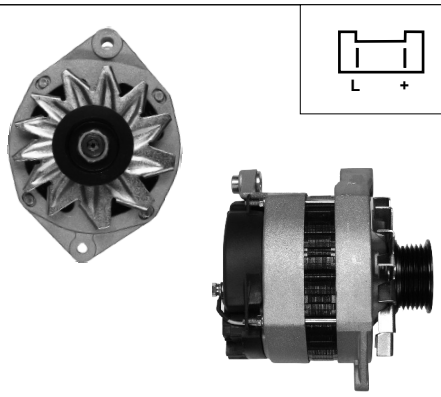

AS A3026

ORIGINAL
A14N142
A14N171

HC PARTS
CA634IR
12V 90A
A:47 B:27
C:67.5

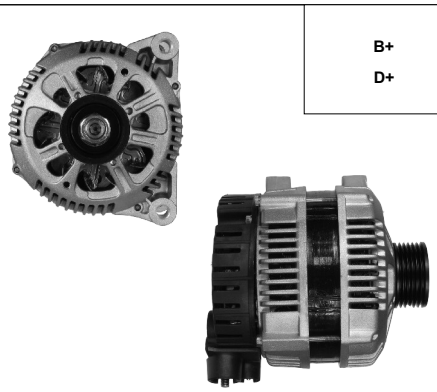

AS A3027

ORIGINAL
2542228

HC PARTS
CA1509IR
12V 150A
A:43 B:22
C:46

ALTERNATORS
VALEO

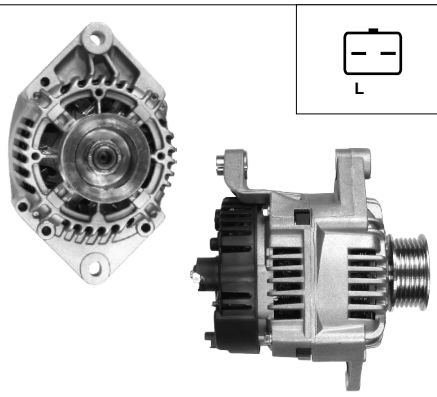

AS A3028

ORIGINAL
2541953
A11VI88
TG85017

HC PARTS
CA1304IR
12V 75A
A:46.5 B:27
C:67

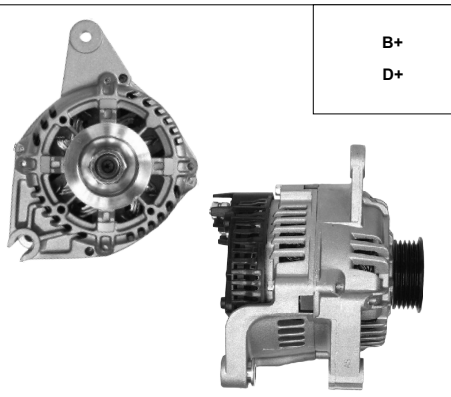

AS A3029

ORIGINAL
2541725

HC PARTS
CA1038IR
12V 70A
A:53 B:27
C:56

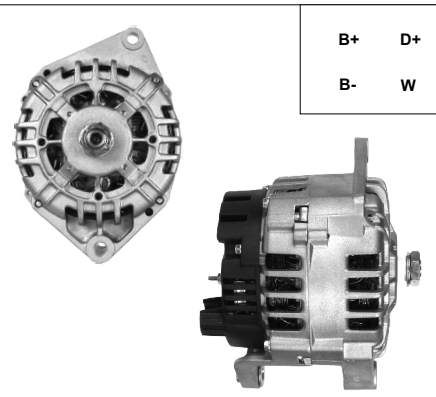

AS A3030

ORIGINAL
2542310

HC PARTS
CA1574IR
24V 80A
A: B:27
C:68.5

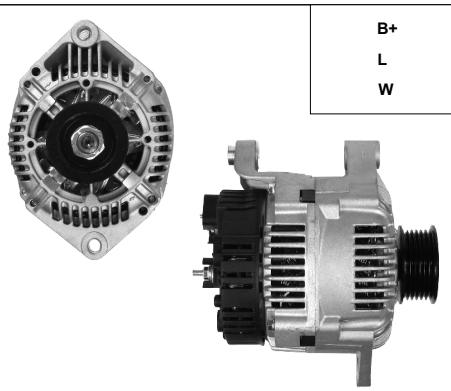

AS A3031

ORIGINAL
2541641

HC PARTS
CA1080IR
12V 80A
A:47 B:27
C:69

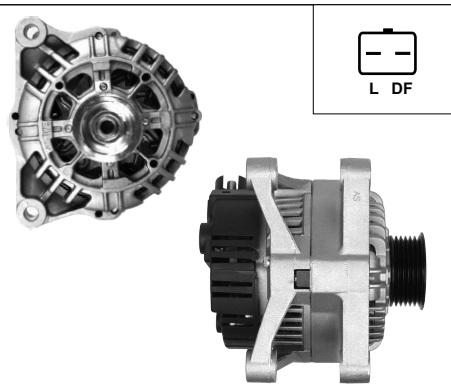

AS A3032

ORIGINAL
A11VI99

HC PARTS
CA1498IR
12V 70A
A:42.5 B:22
C:45.5

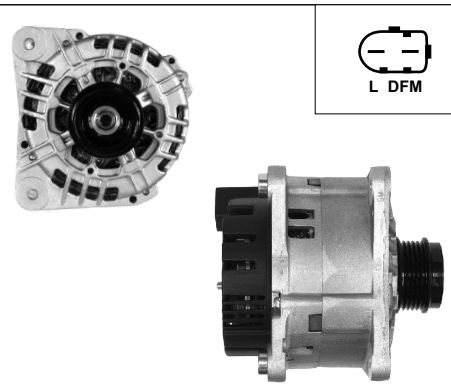

AS A3033

ORIGINAL
2542496

HC PARTS
CA1678IR
12V 140A
A:29 B:14
C:61

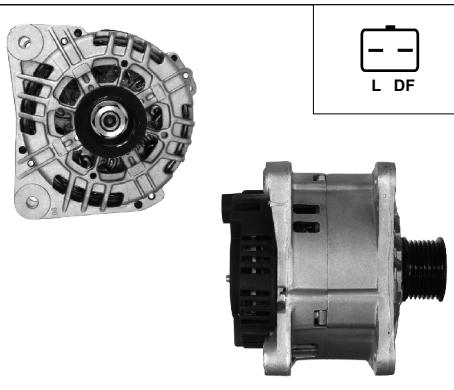

AS A3034

ORIGINAL
437437

HC PARTS
CA1814IR
12V 125A
A:33 B:14
C:61

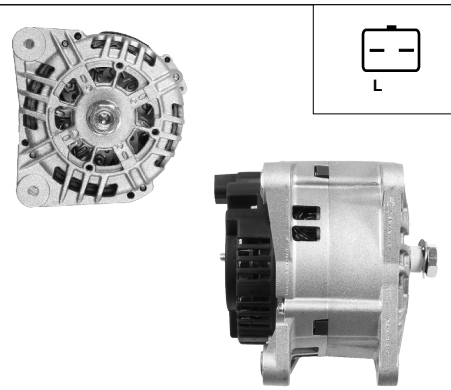

AS A3035

ORIGINAL
SG12B050

HC PARTS
CA1645IR
12V 125A
A:36 B:14
C:61

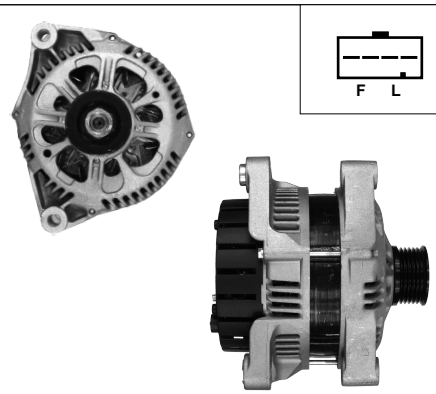

AS A3036

ORIGINAL
A14VI23

HC PARTS
CA1495IR
12V 150A
A:51.5 B:30
C:57.5

ALTERNATORS
VALEO

L

AS A3037

ORIGINAL
SG12B017

HC PARTS
CA1627IR
12V 125A
A:32.5 B:14
C:61

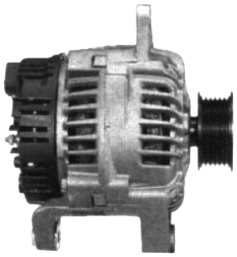

B+
D+

AS A3038

ORIGINAL
2541344

HC PARTS
CA817IR
12V 120A
A:50 B:27
C:67

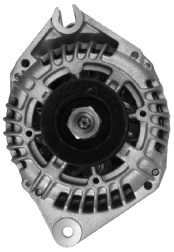
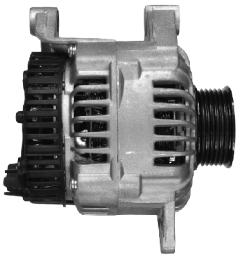

B+
D+

AS A3039

ORIGINAL
2541475
2511741
A13VI51
A13VI88

HC PARTS
CA730IR
12V 80A
A:43 B:27.3
C:67

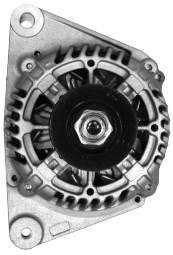
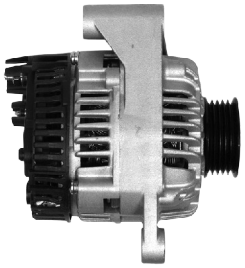

B+
D+

AS A3040

ORIGINAL
2541720

HC PARTS
CA1095IR
12V 70A
A:88.5 B:56
C:

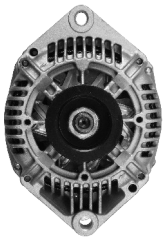

B+
D+

AS A3041

ORIGINAL
2541679

HC PARTS
CA1157IR
12V 110A
A:53 B:27.2
C:68

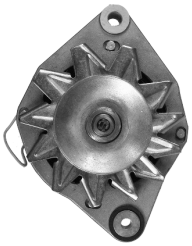
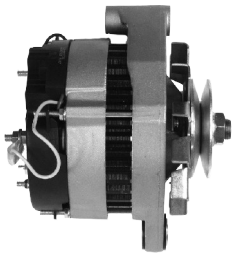

B+
D+

AS A3042

ORIGINAL
2518039

HC PARTS
CA1192IR
12V 50A
A:73.5 B:50.5
C:

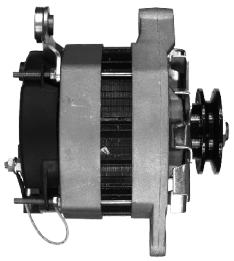

L +

AS A3043

ORIGINAL
2541226

HC PARTS
CA830IR
12V 90A
A:70 B:27
C:68

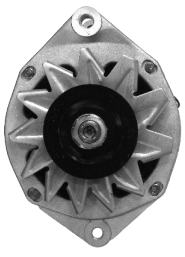

L +

AS A3044

ORIGINAL
2105447
A13VI13
A14N140
A14N75

HC PARTS
CA535IR
12V 105A
A:49 B:26
C:66

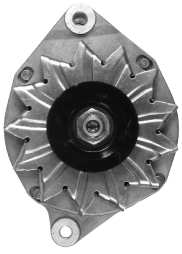
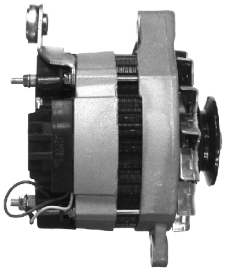

L +

AS A3045

ORIGINAL
A13N13
A13R221
A13R222

HC PARTS
CA165IR
12V 50A
A:48 B:27
C:65

ALTERNATORS
VALEO

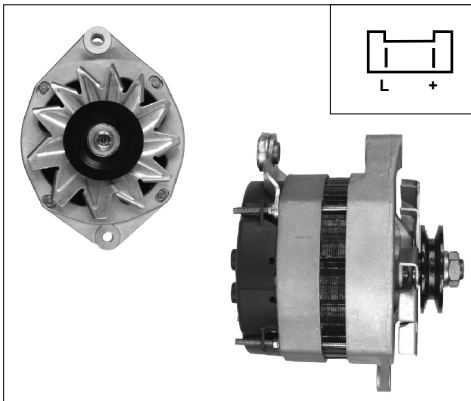

AS A3046

ORIGINAL
A14N22
A14N13

HC PARTS
CA229IR
12V 70A
A:49 B:27
C:66

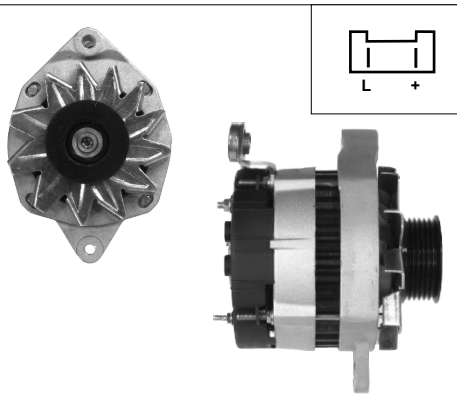

AS A3047

ORIGINAL
A13N126

HC PARTS
CA301IR
12V 50A
A:47 B:27
C:68

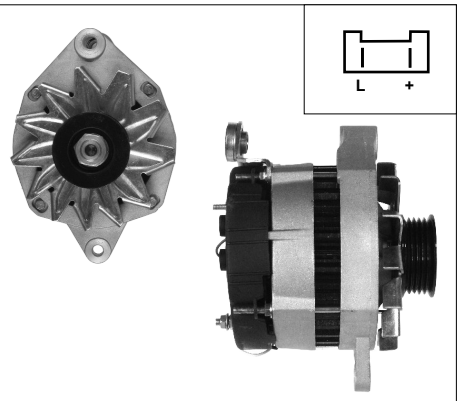

AS A3048

ORIGINAL
A13N120

HC PARTS
CA372IR
12V 60A
A:47 B:27
C:68

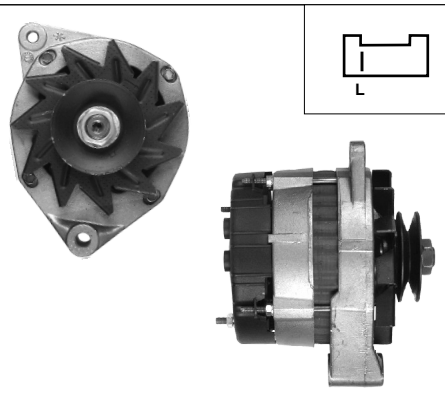

AS A3049

ORIGINAL
A13N109

HC PARTS
CA370IR
12V 50A
A:56 B:27
C:69.5

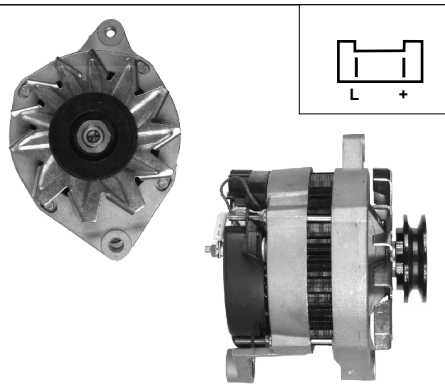

AS A3050

ORIGINAL
A13N158

HC PARTS
CA649IR
12V 70A
A:57 B:27
C:72

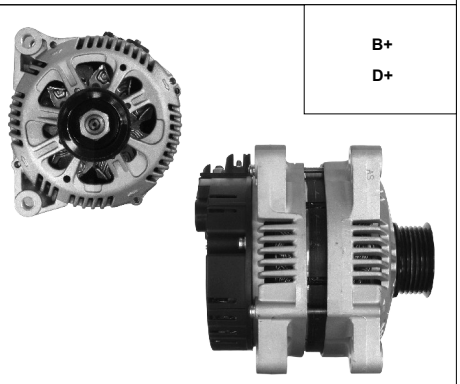

AS A3051

ORIGINAL
2541251

HC PARTS
CA1553IR
12V 150A
A:42.5 B:22
C:45.5

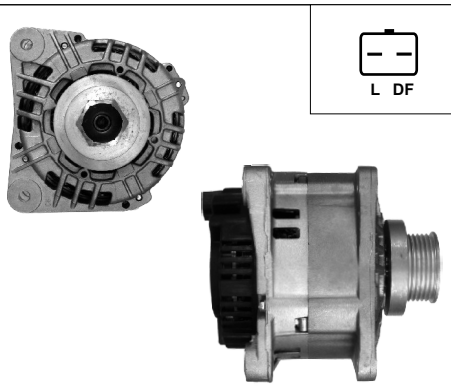

AS A3052

ORIGINAL
2542664

HC PARTS
CA1762IR
12V 110A
A:41.5 B:14.5
C:60

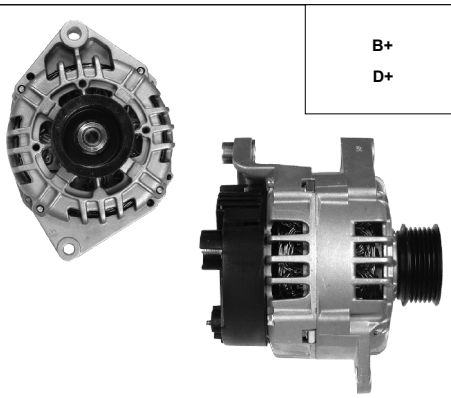

AS A3053

ORIGINAL
2542441A

HC PARTS
CA1643IR
12V 120A
A:52 B:27
C:67.5

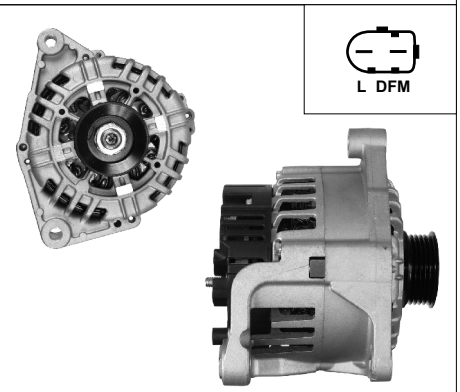

AS A3054

ORIGINAL
2542295
437176
SG12B018

HC PARTS
CA1664IR
12V 120A
A:43 B:
C:82

ALTERNATORS
VALEO

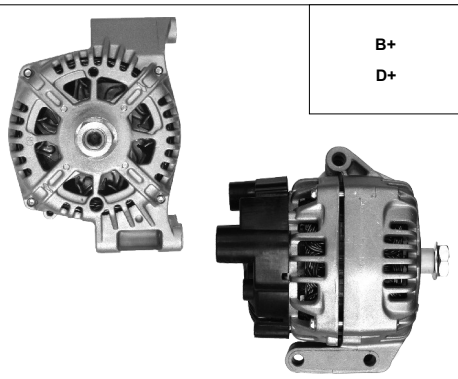

AS A3055

ORIGINAL	HC PARTS
2542670	CA1862IR
	12V 90A
	A:42 B:64
	C:56

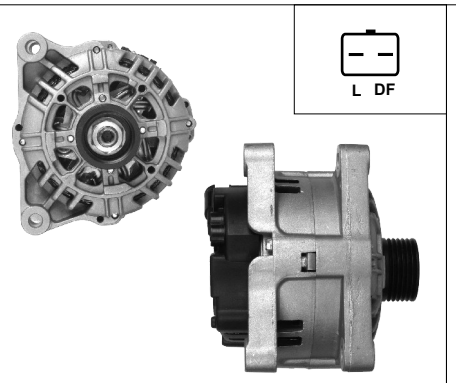

AS A3056

ORIGINAL	HC PARTS
2542491	CA1681IR
	12V 90A
	A:42 B:22
	C:45.5

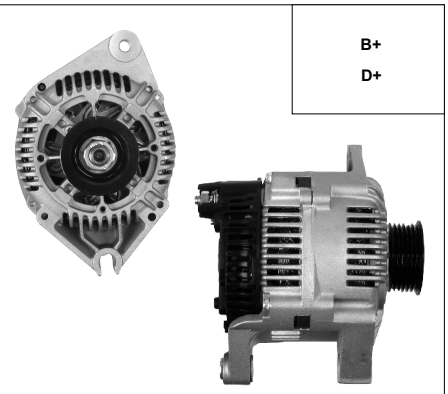

AS A3057

ORIGINAL	HC PARTS
A13VI71	CA825IR
	12V 95A
	A:43 B:27
	C:68

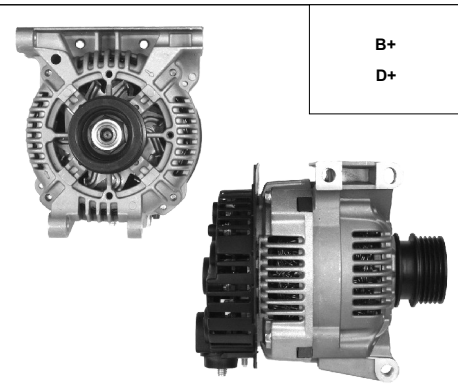

AS A3058

ORIGINAL	HC PARTS
2542291	CA1342IR
2542291A	12V 90A
436732	A:30 B:
A13VI178	C:

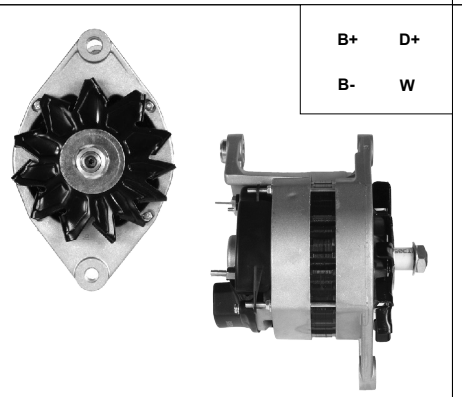

AS A3059

ORIGINAL	HC PARTS
2541624	CA1049IR
2542514	24V 55A
436393	A: B:14.5
	C:99

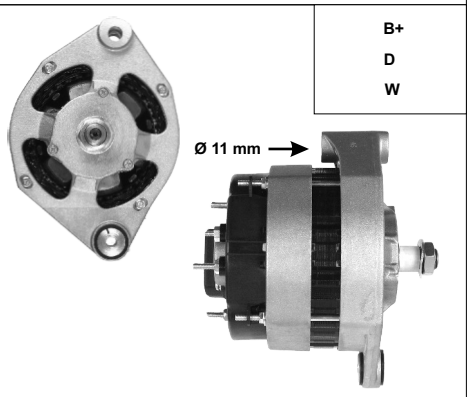

AS A3060

ORIGINAL	HC PARTS
2181991	CA857IR
	24V 55A
	A: B:50.5
	C:

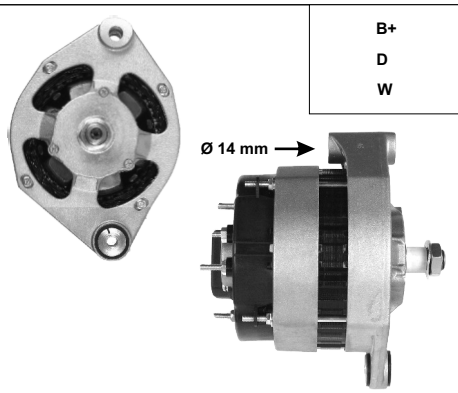

AS A3061

ORIGINAL	HC PARTS
2522104	CA858IR
	24V 55A
	A: B:50.5
	C:

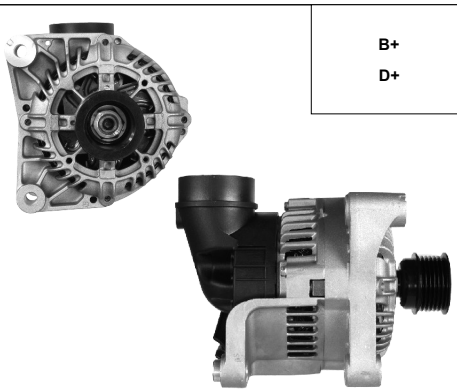

AS A3062

ORIGINAL	HC PARTS
2541494	CA1064IR
436385	12V 80A
A13VI54	A:69 B:28
VA281	C:76

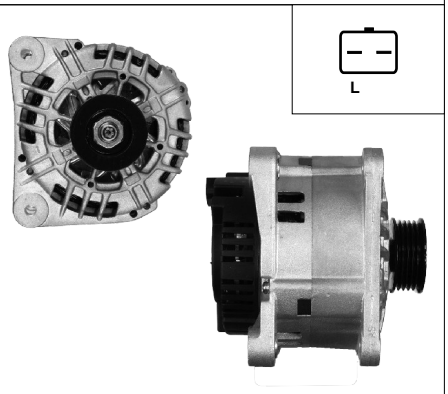

AS A3063

ORIGINAL	HC PARTS
2542573	CA1662IR
437361	12V 125A
SG12B055	A:32 B:14
8253975	C:61

A, B, C - page 5

Electric conections - page 4

ALTERNATORS
VALEO

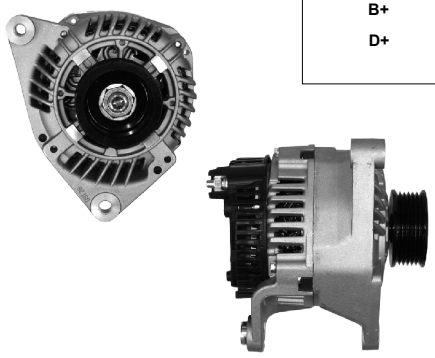

B+
D+

AS A3064

ORIGINAL	HC PARTS
A13VI 155	CA837IR
A13VI 24	12V 70A
	A:31 B:14
	C:82

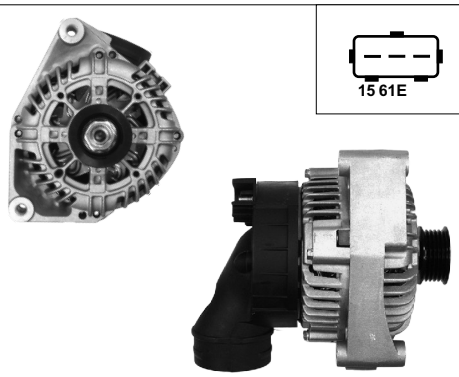

15 61E

AS A3065

ORIGINAL	HC PARTS
A13VI 130	CA1400IR
	12V 95A
	A:78 B:56
	C:

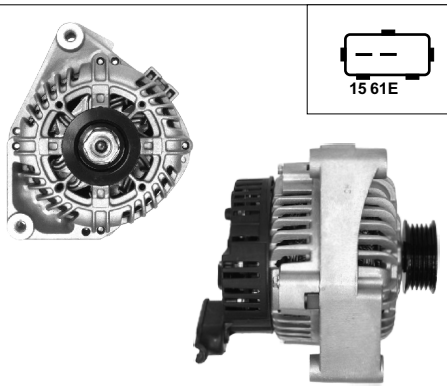

15 61E

AS A3066

ORIGINAL	HC PARTS
A13VI 97	CA1247IR
	12V 95A
	A:77.5 B:56
	C:

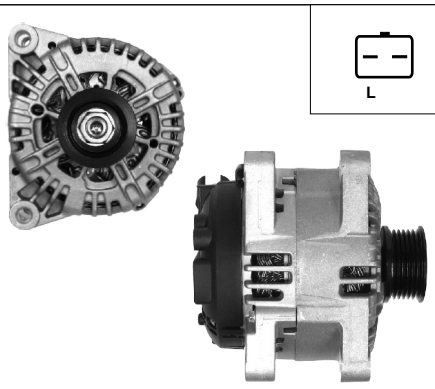

L

AS A3067

ORIGINAL	HC PARTS
2542705	CA1850IR
2542839	12V 150A
437457	A:42 B:21
SG15S031	C:45

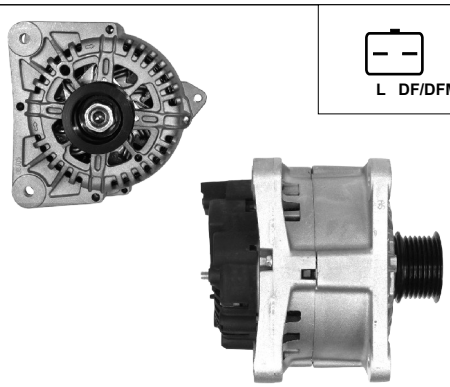

L DF/DFM

AS A3068

ORIGINAL	HC PARTS
2542663	CA1768IR
2542818	12V 150A
2543342	A:33 B:14
	C:61

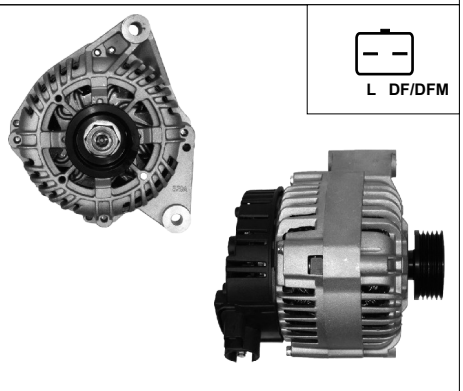

L DF/DFM

AS A3069

ORIGINAL	HC PARTS
2542400	CA1642IR
437186	12V 97A
437343	A:75 B:56
A13VI 246	C:

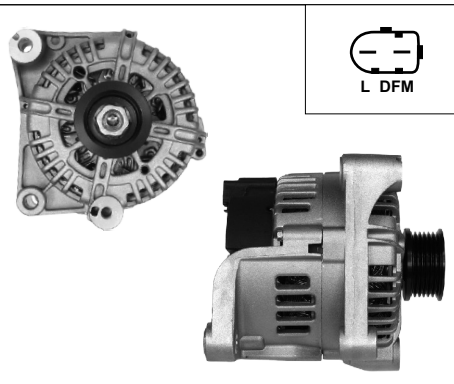

L DFM

AS A3070

ORIGINAL	HC PARTS
2542672	CA1757IR
2542852	24V 55A
437452	A: B:50.5
	C:

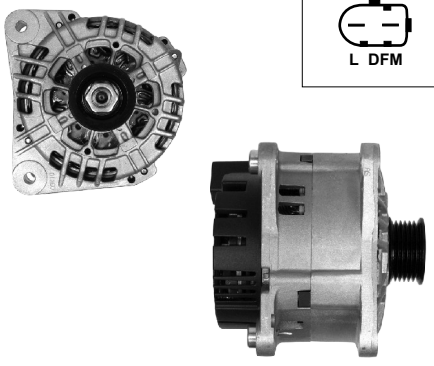

L DFM

AS A3071

ORIGINAL	HC PARTS
2542461	CA1836IR
437339	12V 80A
SG12B042	A:69 B:28
	C:76

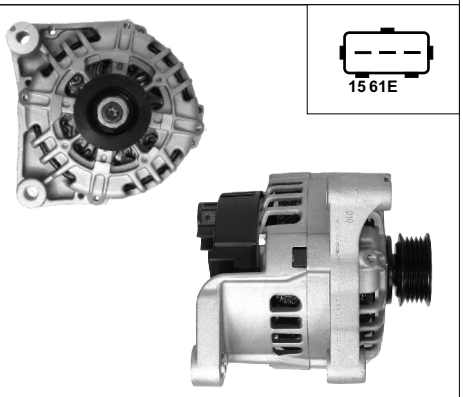

15 61E

AS A3072

ORIGINAL	HC PARTS
2542251	CA1559IR
2542432	12V 120A
2542797	A:60.5 B:28
437116	C:75.5

ALTERNATORS
VALEO

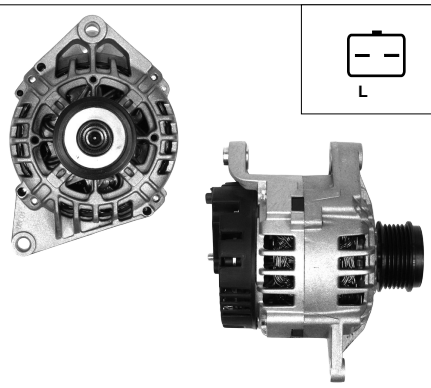

L

AS A3073

ORIGINAL	HC PARTS
A13VI 289	CA1572IR
SG10B019	12V 120A
	A:46 B:26.5
	C:68.5

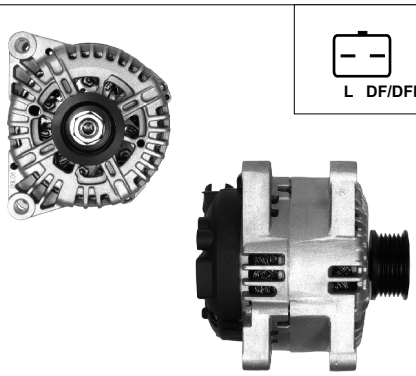

L DF/DFM

AS A3074

ORIGINAL	HC PARTS
A14VI 40	CA1674IR
TG15C022	12V 150A
TG15C054	A:42.5 B:21
439503	C:45

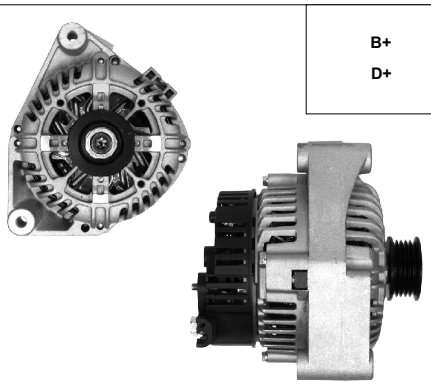

B+
D+

AS A3075

ORIGINAL	HC PARTS
2541321	CA845IR
436380	12V 95A
A13VI 18	A:77.5 B:56
NA457	C:

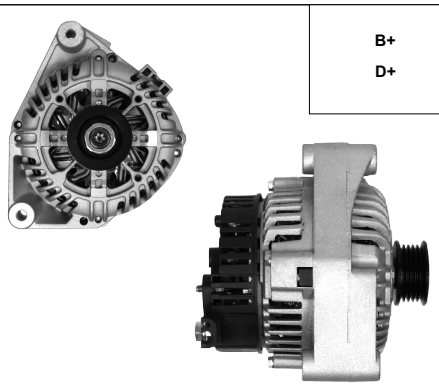

B+
D+

AS A3076

ORIGINAL	HC PARTS
2541694	CA1150IR
436619	12V 105A
A13VI 76	A:77 B:57
NA536	C:

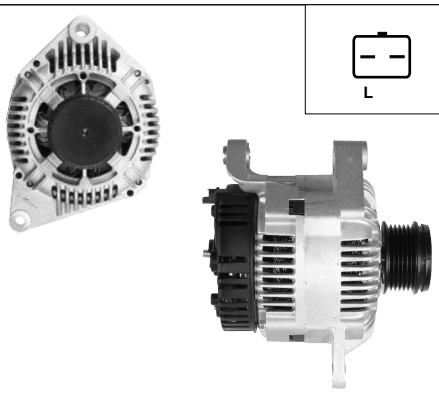

L

AS A3077

ORIGINAL	HC PARTS
2542495	CA1653IR
437347	12V 80A
A13VI 285	A:46 B:27
	C:67

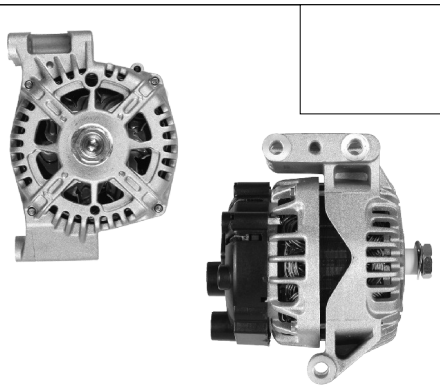

AS A3078

ORIGINAL	HC PARTS
2542841	CA1855IR
2542850	12V 75A
437473	A:43 B:64
TG8S012	C:55

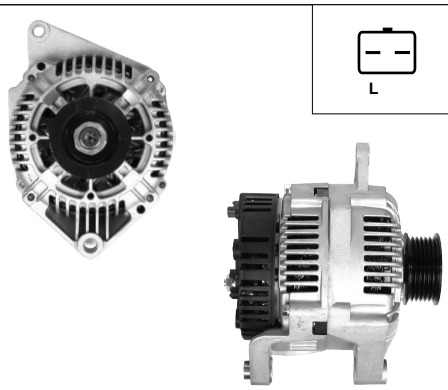

L

AS A3079

ORIGINAL	HC PARTS
2541954	CA1444IR
436748	12V 110A
A13VI195	A:47 B:27
NA551	C:66.5

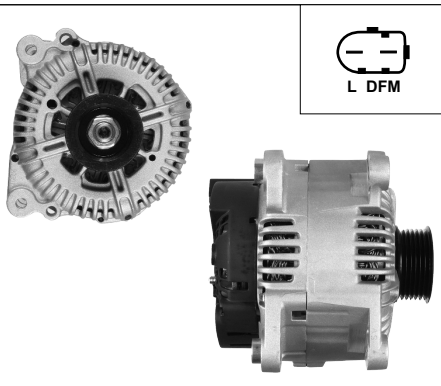

L DFM

AS A3080

ORIGINAL	HC PARTS
2542891	CA1911IR
2543264	12V 150A
437554	A:30 B:14
TG15C048	C:61

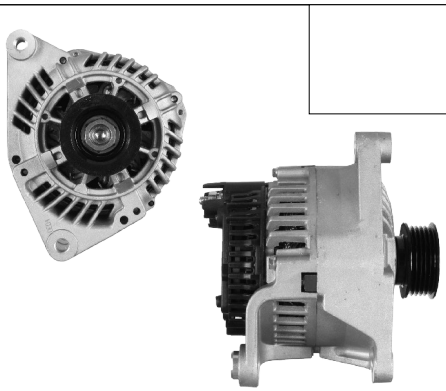

AS A3081

ORIGINAL	HC PARTS
2541856	CA1139IR
436640	12V 90A
A13VI138	A:34.5 B:14
NA503	C:82

ALTERNATORS
VALEO

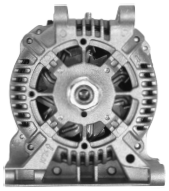
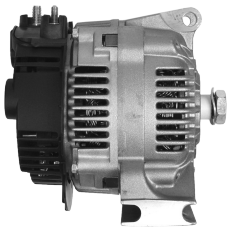

AS A3082

ORIGINAL	HC PARTS
A13VI202	CA1390IR
A13VI257	12V 90A
SG9B038	A:30 B:
SG9B039	C:

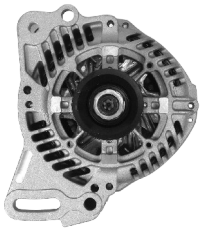
L DFM
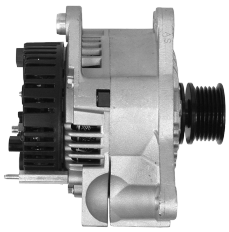

AS A3083

ORIGINAL	HC PARTS
A13VI241	CA1750IR
437172	12V 90A
	A:40 B:14
	C:61

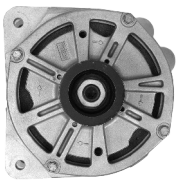
L DF/DFM
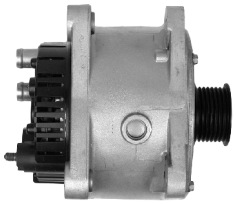

AS A3084R

ORIGINAL	HC PARTS
SG15L020	CA1767IR
2542637	12V 155A
	A:33 B:14
R - rebuild	C:60

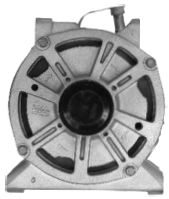
L DFM
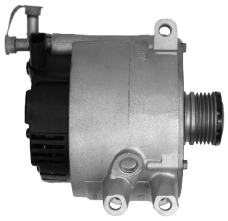

AS A3085R

ORIGINAL	HC PARTS
SG15L012	CA1680IR
SG15L026	12V 150A
	A:30 B:151.5
R - rebuild	C:42.5

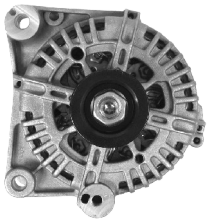
COM
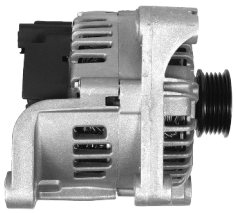

AS A3086

ORIGINAL	HC PARTS
2542685	CA1825IR
437451	12V 150A
TG15C018	A:68.5 B:28
	C:77

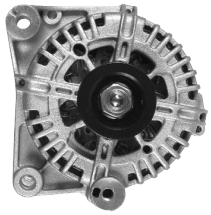
L DFM
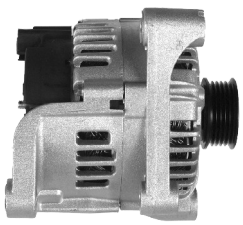

AS A3087

ORIGINAL	HC PARTS
2542343	CA1756IR
2542538	12V 150A
2542602	A:60.5 B:28
TG15C038	C:76

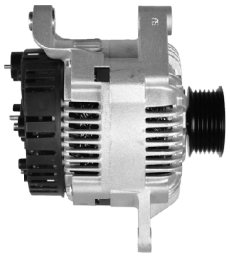

AS A3088

ORIGINAL	HC PARTS
2541983	CA1308IR
2941983	12V 80A
436730	A:46.5 B:27
A13VI211	C:65

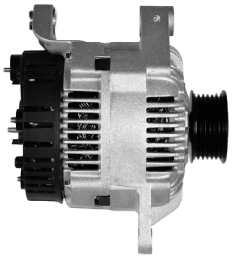

AS A3089

ORIGINAL	HC PARTS
A13VI210	CA1309IR
	12V 110A
	A:46.5 B:27
	C:66.5

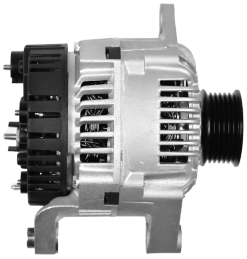

AS A3090

ORIGINAL	HC PARTS
A13VI216	CA1307IR
	12V 110A
	A:46.5 B:27
	C:66.5

A, B, C - page 5

Electric conections - page 4

ALTERNATORS
VALEO

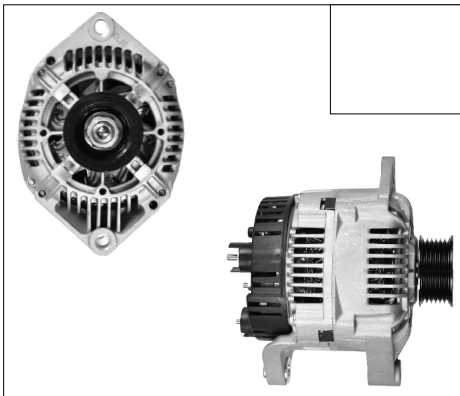

AS A3091

ORIGINAL	HC PARTS
A13VI217	CA1331IR
	12V 80A
	A:47 B:27
	C:65.5

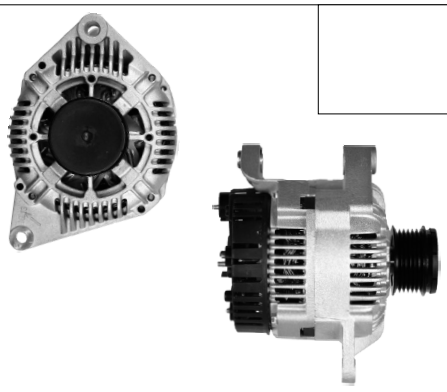

AS A3092

ORIGINAL	HC PARTS
A13VI292	CA1303IR
	12V 120A
	A:46.5 B:27
	C:65

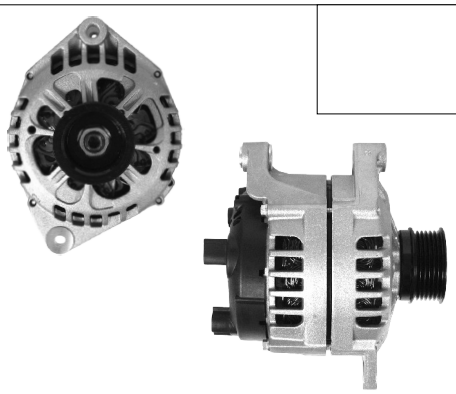

AS A3093

ORIGINAL	
2542312	
2542849	12V 150A
SG15S010	A:52.5 B:
SG15S032	C:70

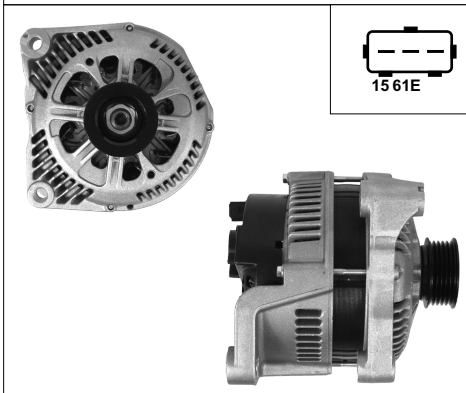

AS A3094

ORIGINAL	HC PARTS
SG15S030	CA1584IR
2542264	12V 150A
437160	A:60.5 B:28
A14VI29	C:75

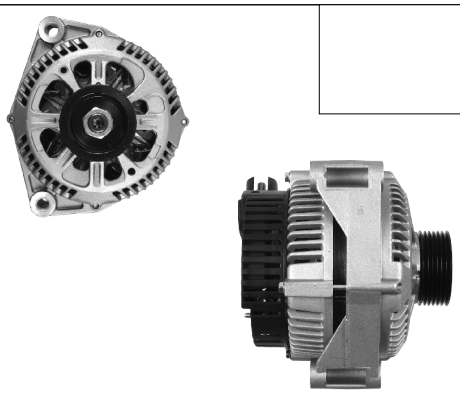

AS A3095

ORIGINAL	HC PARTS
436643	CA1156IR
439072	12V 120A
2541786	A:91.5 B:56
A14VI14	C:

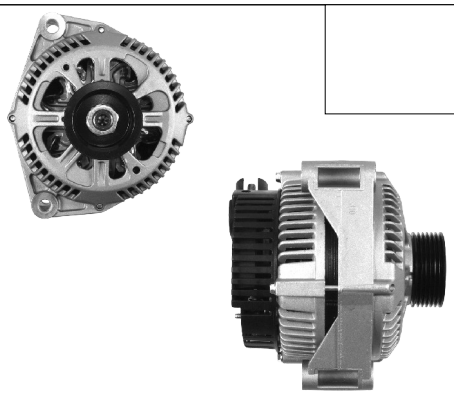

AS A3096

ORIGINAL	HC PARTS
436478	CA1098IR
439025	12V 120A
2541760	A:91.5 B:56
A14VI13	C:

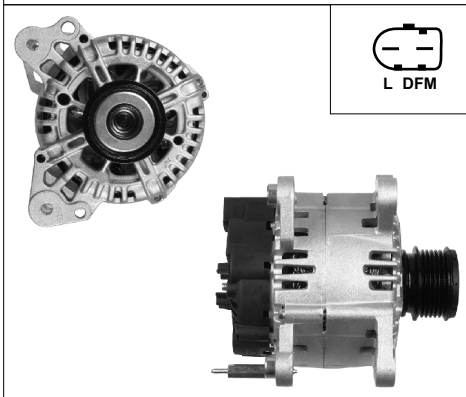

AS A3097

ORIGINAL	HC PARTS
TG11C017	CA1810IR
437470	12V 110A
439501	A:39 B:14
2542730	C:61

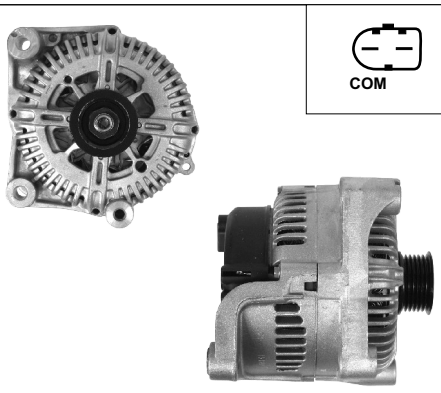

AS A3098R

ORIGINAL	HC PARTS
TG17C010	CA1905IR
TG17C048	12V 170A
	A:60 B:28.5
R - rebuild	C:76.5

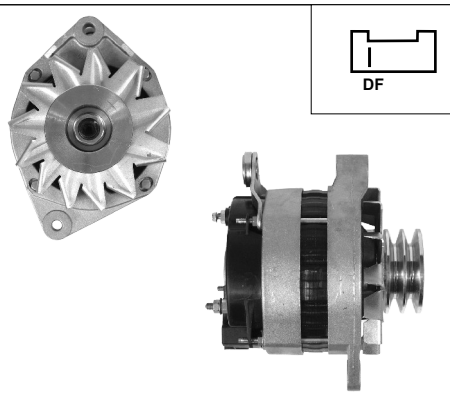

AS A3099R

ORIGINAL	HC PARTS
A14N28T	CA 721
436348	24V 60A
	A: B:27
R - rebuild	C:66

A, B, C - page 5

Electric conections - page 4

ALTERNATORS
VALEO

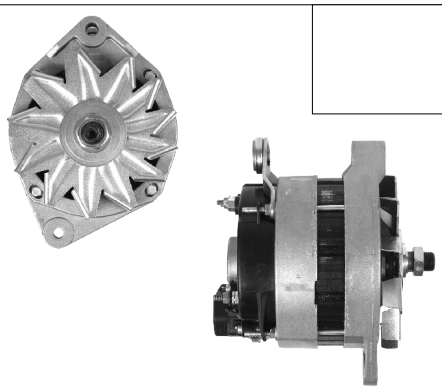

AS A3100R

ORIGINAL	HC PARTS
A14N114	CA898IR
436351	24V 60A
	A: B:26.5
R - rebuild	C:66.5

AS A3101(VALEO)

ORIGINAL	HC PARTS
439481	CA1675IR
542746	12V 90A
SG9B048	A:29 B:14
SG9B057	C:60.5

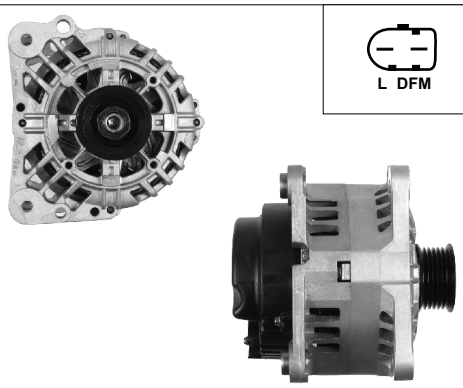

AS A3102(VALEO)

ORIGINAL	HC PARTS
437445	CA1755IR
2542577	12V 70A
SG8B023	A:29 B:14
SG8B026	C:61

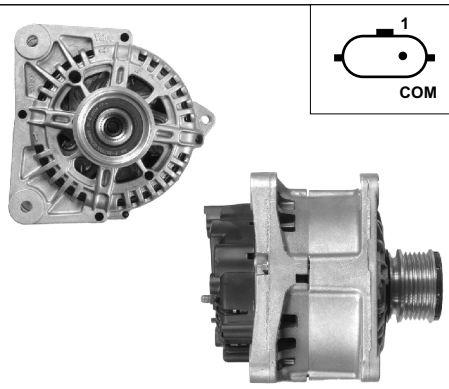

AS A3103(VALEO)

ORIGINAL	HC PARTS
439593	CA1975IR
TG11C041	12V 110A
TG11C066	A:38.5 B:14
TG11C069	C:61

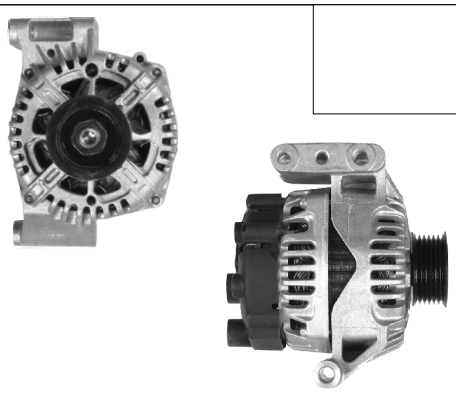

AS A3104(VALEO)

ORIGINAL	HC PARTS
437475	CA1856IR
2542671	12V 75A
2542671A	A:40 B:64
TG8S010	C:55

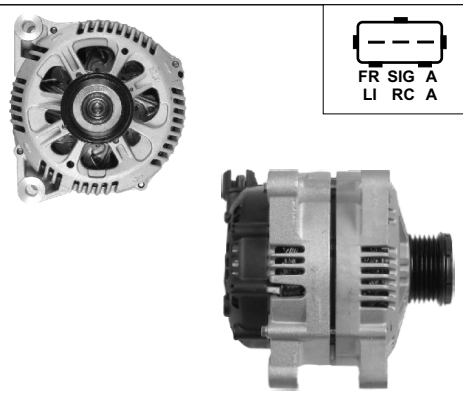

AS A3105

ORIGINAL	HC PARTS
437432	CA1778IR
439473	12V 150A
2542565	A:41.5 B:21
SG15S019	C:45

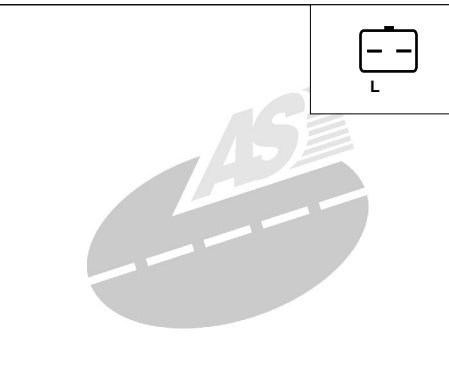

AS A3106(VALEO)

ORIGINAL	HC PARTS
437373	CA1976IR
2542422	12V 95A
SG9B035	A:53.5 B:27
SG9B107	C:67.5

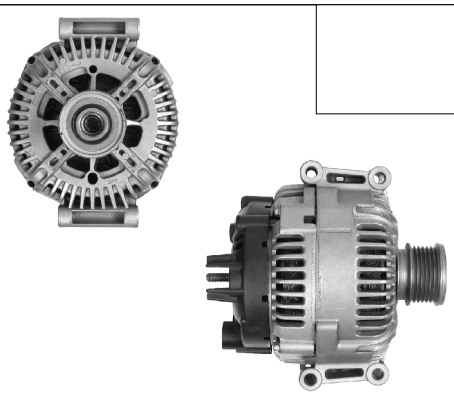

AS A3107(VALEO)

ORIGINAL	
440057	
TG17C041	12V 180A
TG17C061	A:31 B:70
	C:56

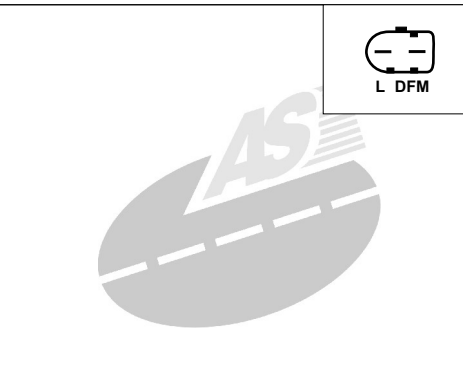

AS A3108

ORIGINAL	HC PARTS
2542233	CA1588IR
SG12B011	12V 120A
SG12B025	A:30.5 B:14
SG12B054	C:82.5

A, B, C - page 5

Electric conections - page 4

L DFM

AS A3109

ORIGINAL	HC PARTS
2542232	CA1759IR
2542680	12V 120A
SG12B010	A:34.5 B:14
SG12B074	C:82.5

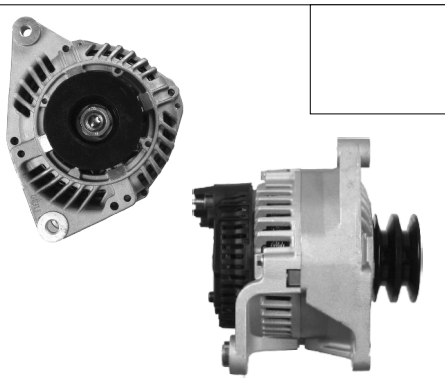

AS A3110

ORIGINAL	
2542300A	
437195	12V 120A
439279	A:32 B:14
A13VI243	C:82

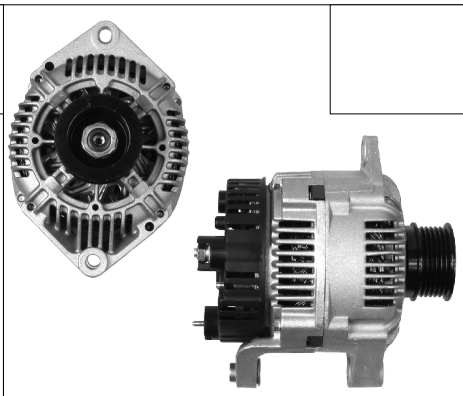

AS A3111

ORIGINAL	HC PARTS
2541927A	CA1434IR
436743	12V 110A
439216	A:52.5 B:27
A13VI179	C:66.5

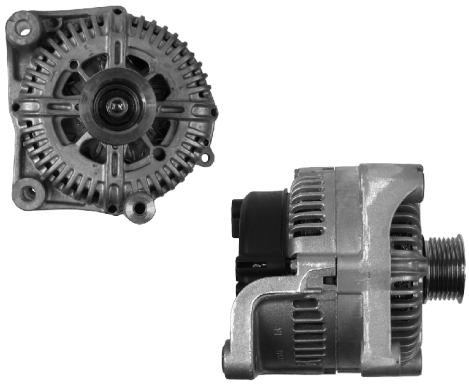

AS A3112(VALEO)

ORIGINAL	
2542717	
437564	12V 180A
TG17C016	A:26.5 B:46
TG17C016B	C:76

ALTERNATORS
MAGNETI MARELLI/LUCAS

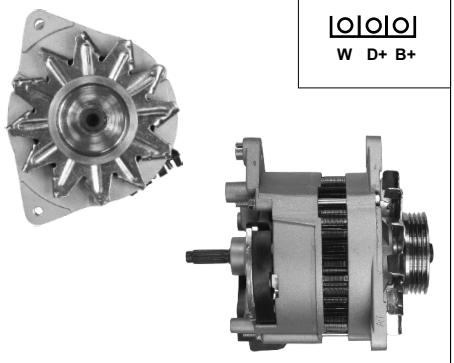

AS A4001

ORIGINAL	HC PARTS
54022547	CA719IR
54022610	12V 70A
	A:34 B:11
	C:83

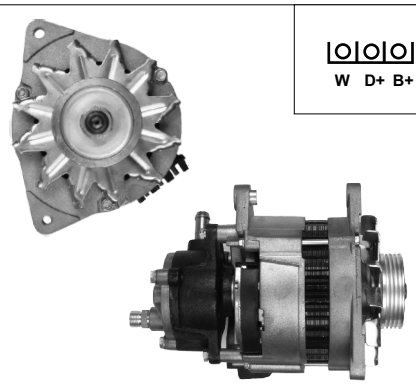

AS A4002

ORIGINAL	HC PARTS
54022537	CA1031IR
	12V 70A
	A:34 B:11
	C:83

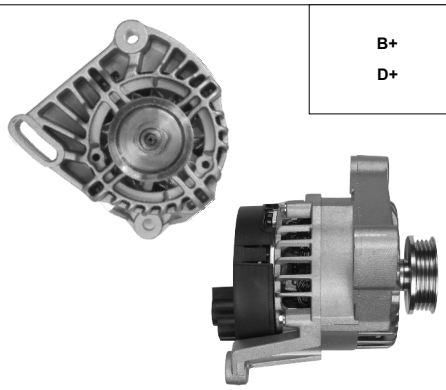

AS A4003

ORIGINAL	HC PARTS
63320219	CA890IR
63321200	12V 65A
63321600	A:54 B:32
	C:

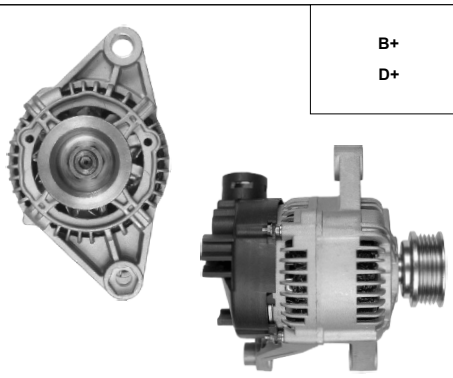

AS A4004

ORIGINAL	HC PARTS
63321295	CA1220IR
63321606	12V 75A
63321607	A:59 B:25
	C:70

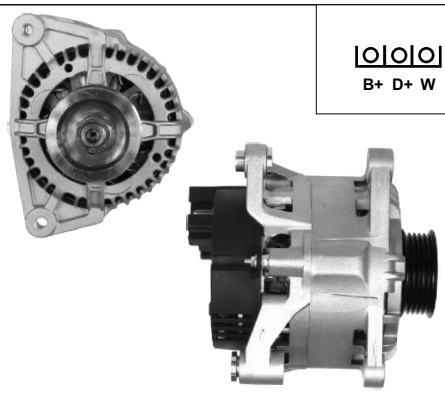

AS A4005

ORIGINAL	HC PARTS
63321724	CA1217IR
63321730	12V 70A
63341730	A:33.5 B:14
	C:69

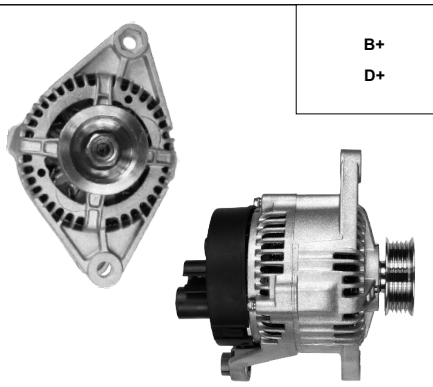

AS A4006

ORIGINAL	HC PARTS
63321276	CA1258IR
63321617	12V 75A
	A:42 B:18
	C:82

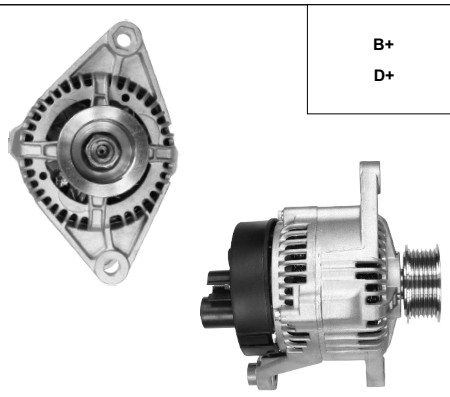

AS A4007

ORIGINAL	HC PARTS
63321251	CA1084IR
63321282	12V 65A
63321615	A:40.5 B:17
	C:82.5

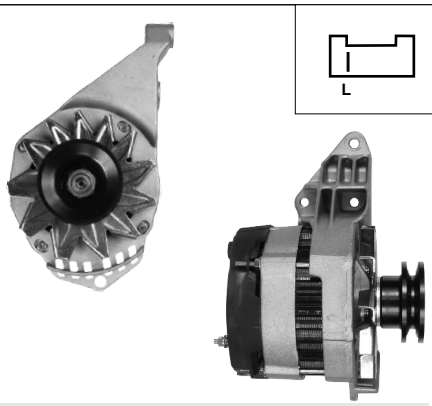

AS A4008

ORIGINAL	HC PARTS
63321170	CA889IR
A13N269	12V 60A
	A:50 B:28
	C:

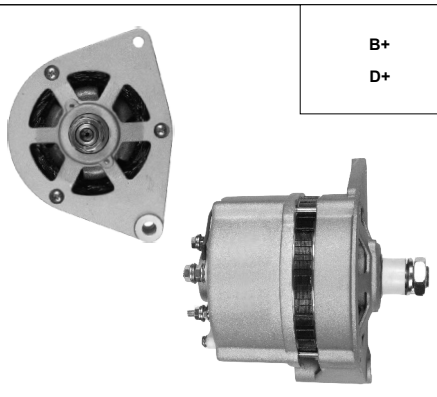

AS A4009

ORIGINAL	HC PARTS
0120339521	CA616IR
0120339536	12V 33A
LRA611	A: B:56
	C:

A, B, C - page 5

Electric conections - page 4

ALTERNATORS
MAGNETI MARELLI/LUCAS

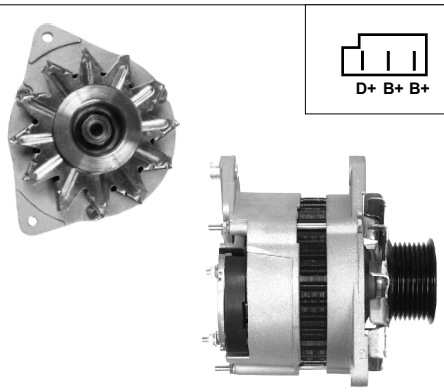

AS A4010

ORIGINAL	HC PARTS
24406	CA1050IR
54022415	24V 30A
54022578	A:34 B:12
AAK3310	C:83

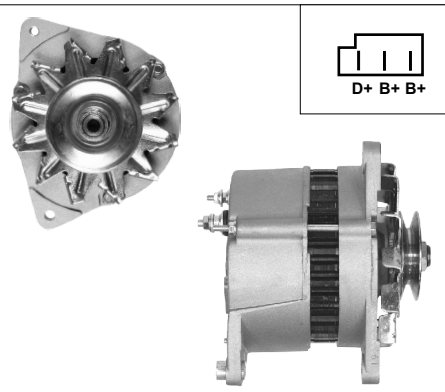

AS A4011

ORIGINAL	HC PARTS
0120488176	CA305IR
0120488182	12V 55A
24249	A:36.5 B:11
24277	C:83

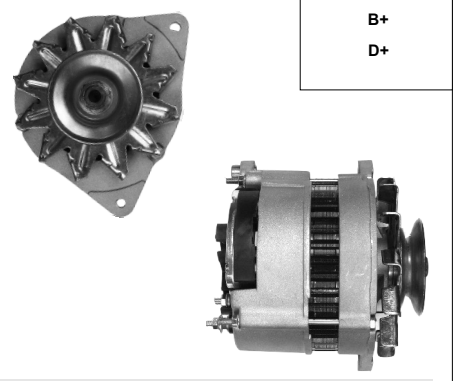

AS A4012

ORIGINAL	HC PARTS
0120489346	CA325IR
0120489347	12V 70A
0120489984	A:37 B:11
	C:83

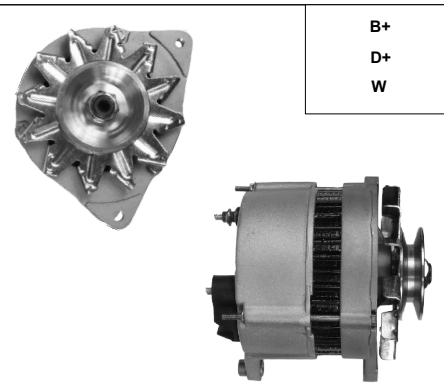

AS A4013

ORIGINAL	HC PARTS
24217	CA560IR
24217A	12V 70A
24217B	A:35 B:11
24217E	C:83

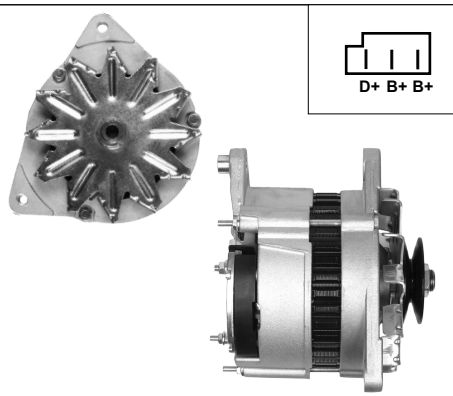

AS A4014

ORIGINAL	HC PARTS
24223	CA650IR
24231	12V 70A
	A:36 B:11
	C:83

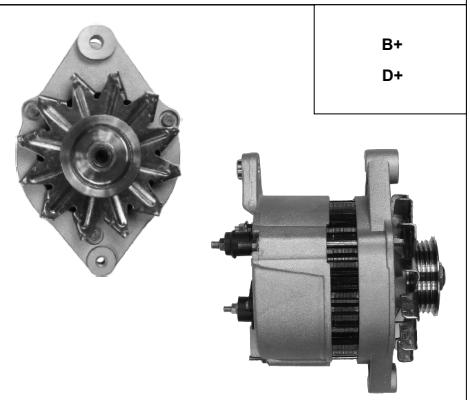

AS A4015

ORIGINAL	HC PARTS
24286	JA756IR
54022375	12V 67A
54022653	A:39 B:25
	C:82

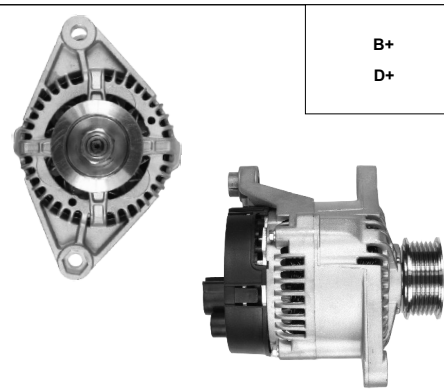

AS A4016

ORIGINAL	HC PARTS
63321618	CA1161IR
63321302	12V 85A
	A:41 B:17
	C:82

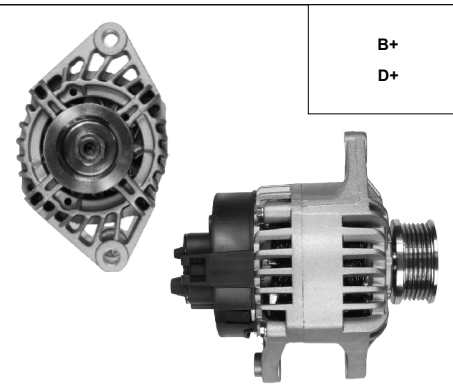

AS A4017

ORIGINAL	HC PARTS
63321311	CA1160IR
63321611	12V 80A
	A:45 B:17.5
	C:54

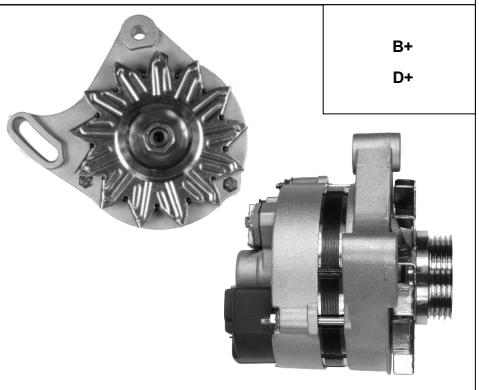

AS A4018

ORIGINAL	HC PARTS
63320040	CA851IR
63320122	12V 65A
63321136	A:54 B:32
	C:

A, B, C - page 5

Electric conections - page 4

ALTERNATORS
MAGNETI MARELLI/LUCAS

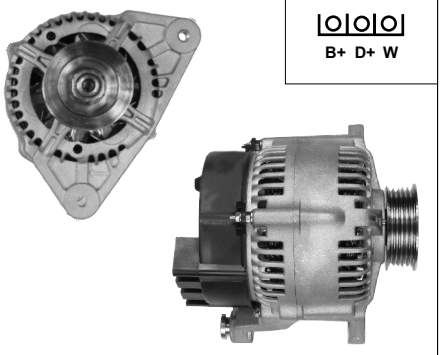

AS A4019

ORIGINAL	HC PARTS
63321666	CA1083IR
63321695	12V 70A
63321425	A:33.5 B:13.5
	C:76

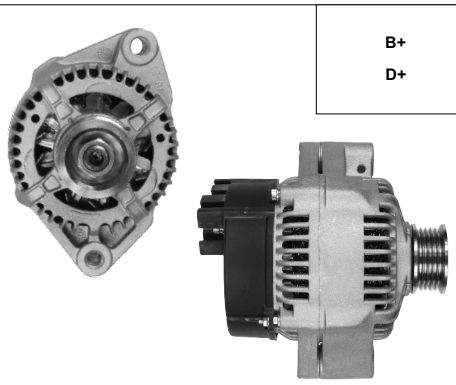

AS A4020

ORIGINAL	HC PARTS
63321238	CA1318IR
63341238	12V 65A
	A:90 B:58.5
	C:

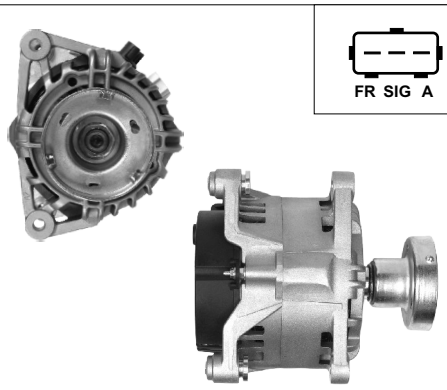

AS A4021

ORIGINAL	HC PARTS
63321746	CA1475IR
63321823	12V 90A
63341746	A: B:17
	C:69

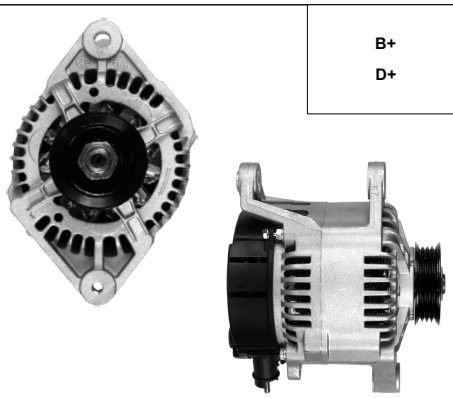

AS A4022

ORIGINAL	HC PARTS
63321692	JA1174IR
63321704	12V 80A
	A:39 B:13
	C:81

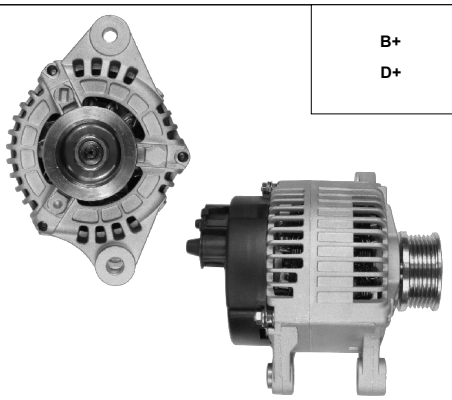

AS A4023

ORIGINAL	HC PARTS
63321232	CA1223IR
63321418	12V 100A
	A:46 B:22
	C:55

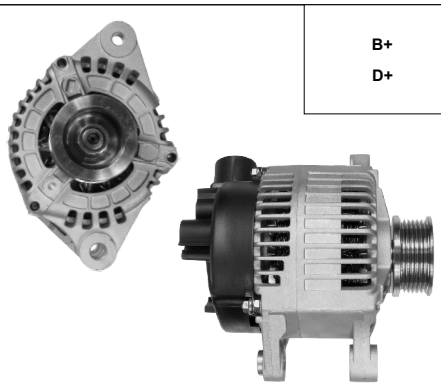

AS A4024

ORIGINAL	HC PARTS
63321436	CA1189IR
63321800	12V 100A
63321803	A:45.5 B:22.5
	C:55

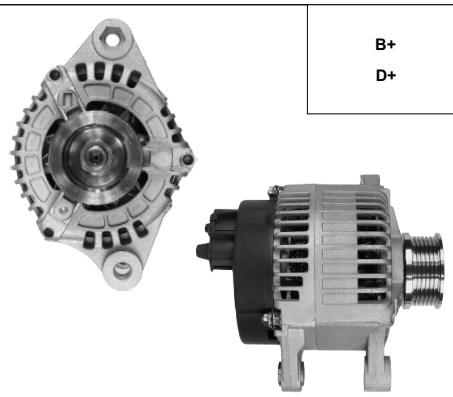

AS A4025

ORIGINAL	HC PARTS
63321423	CA1216IR
63321802	12V 85A
	A:44.5 B:22
	C:55

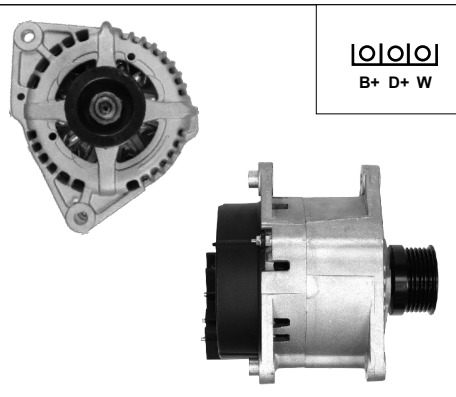

AS A4026

ORIGINAL	HC PARTS
63321232	CA1252IR
63321310	12V 100A
63321313	A:39.5 B:14.3
	C:70

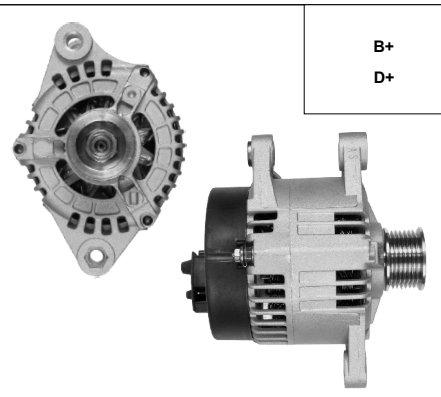

AS A4027

ORIGINAL	HC PARTS
63321241	CA1208IR
63321343	12V 95A
63321800	A:41 B:22
	C:54

ALTERNATORS
MAGNETI MARELLI/LUCAS

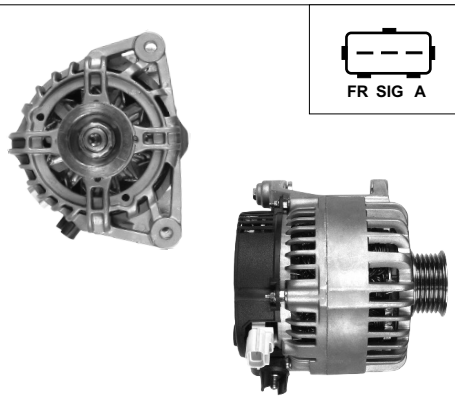

AS A4028

ORIGINAL	HC PARTS
63321678	CA1483IR
63341678	12V 80A
63377401	A:34 B:14
	C:62

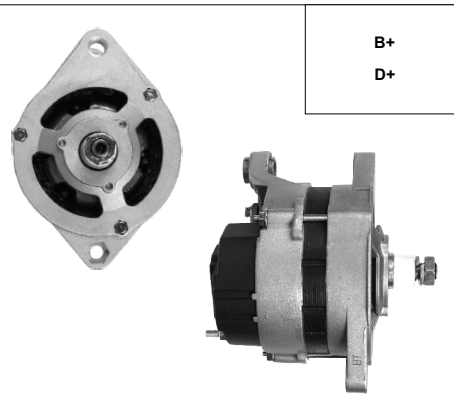

AS A4029

ORIGINAL	HC PARTS
63306000	CA212IR
63306301	24V 27A
63306302	A:45 B:17
	C:63

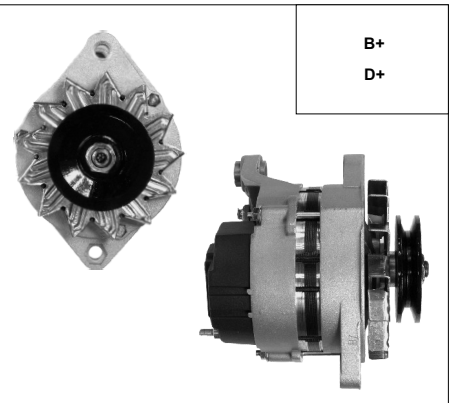

AS A4030

ORIGINAL	HC PARTS
63320024	CA642IR
63321044	12V 55A
63321042	A:49 B:17
	C:64

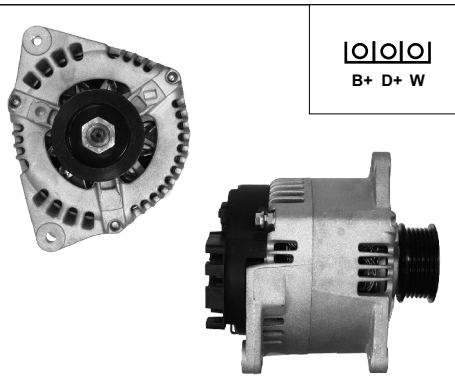

AS A4031

ORIGINAL	HC PARTS
63321324	CA1085IR
	12V 100A
	A:33 B:14
	C:83

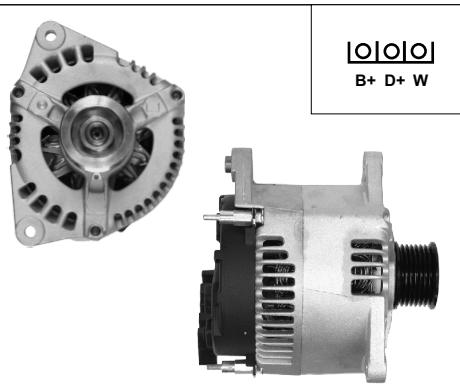

AS A4032

ORIGINAL	HC PARTS
63321358	CA1191IR
63340004	12V 100A
	A:30 B:14
	C:83

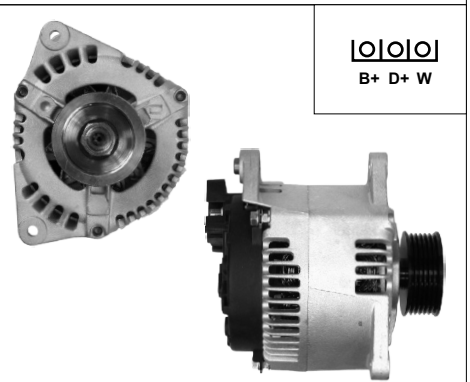

AS A4033

ORIGINAL	HC PARTS
63321285	CA891IR, CA1379IR
	12V 100A
	A:32 B:14
	C:83.5

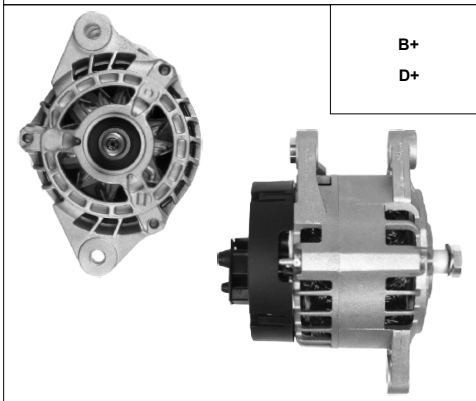

AS A4034

ORIGINAL	HC PARTS
63321507	CA1698IR
	12V 120A
	A:43.5 B:22
	C:55

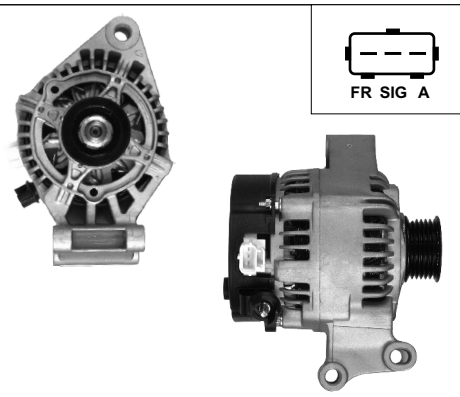

AS A4035

ORIGINAL	HC PARTS
63321679	CA1340IR
	12V 80A
	A:11.5 B:71.5
	C:

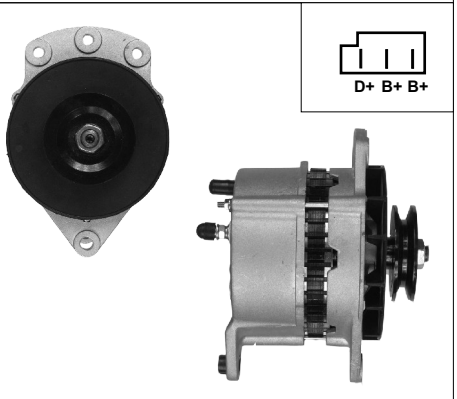

AS A4036

LUCAS	HC PARTS
NAB900	CA1457IR
	12V 70A
	A:43 B:11
	C:85

ALTERNATORS
MAGNETI MARELLI/LUCAS

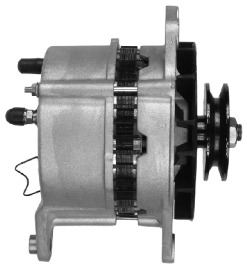
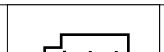

AS A4037

LUCAS
NAB901

HC PARTS
CA1468IR
24V 33A
A:43 B:11
C:85

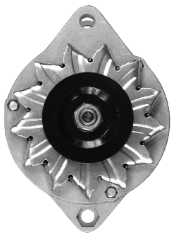
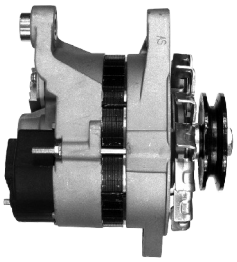
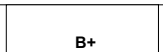

AS A4039

ORIGINAL
63305506

HC PARTS
CA316IR
12V 55A
A:49 B:17
C:64

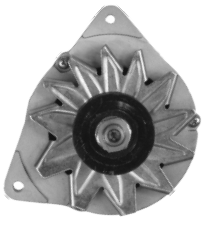
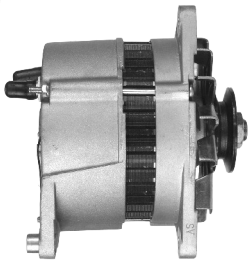
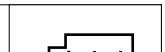

AS A4040

ORIGINAL
54022337A

HC PARTS
CA1330IR
12V 70A
A:37 B:11
C:83

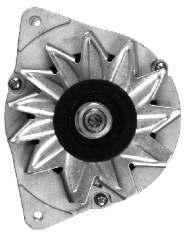
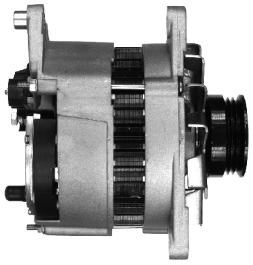
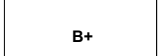

AS A4041

ORIGINAL
54022232

HC PARTS
CA717IR
12V 70A
A:44 B:11
C:83

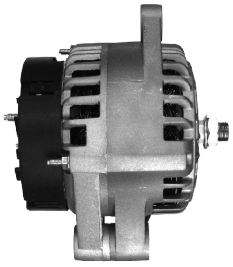
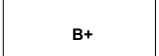

AS A4042

ORIGINAL
63377492

HC PARTS
CA1884IR
12V 105A
A:112.5 B:61.5
C:

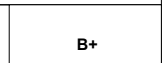

AS A4043

ORIGINAL
46782213

HC PARTS
CA1558IR
12V 100A
A:43.5 B:22
C:55

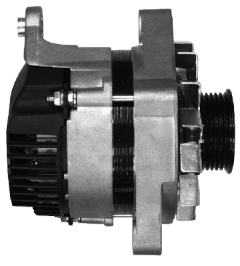
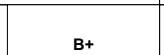

AS A4044

ORIGINAL
63320048

HC PARTS
CA596IR
12V 65A
A:49.5 B:23.5
C:73.5

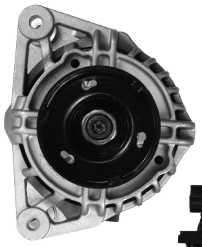
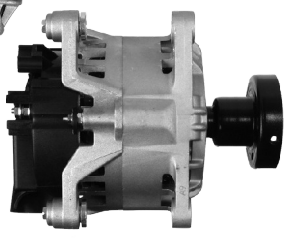
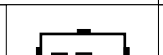

AS A4045

ORIGINAL
63321711

HC PARTS
CA1649IR
12V 90A
A: B:17
C:69.5

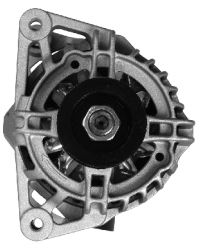
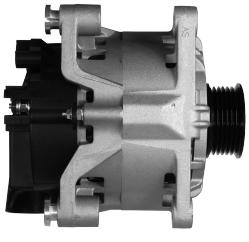

AS A4046

ORIGINAL
63341778

HC PARTS
CA1760IR, CA1772IR
12V 90A
A:33 B:14
C:53

A, B, C - page 5

Electric conections - page 4

ALTERNATORS
MAGNETI MARELLI/LUCAS

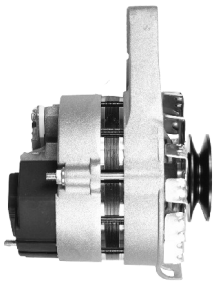

B+
D+

AS A4047

ORIGINAL
63321165
63320094

HC PARTS
CA893IR
12V 55A
A:54 B:23.5
C:

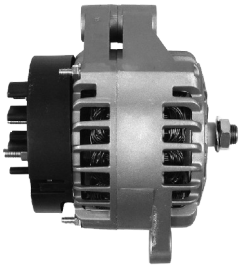

B+
D+
DFM

AS A4048

ORIGINAL
63377491

HC PARTS
CA1890IR
12V 130A
A:113 B:61
C:

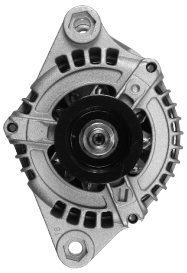
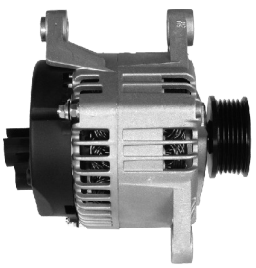

B+
D+

AS A4049

ORIGINAL
63321227

HC PARTS
CA1199IR
12V 100A
A:41 B:22
C:82.5

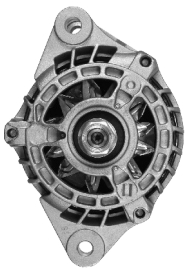
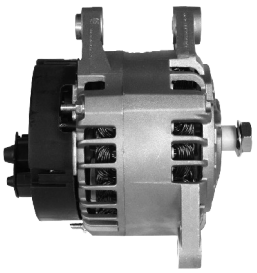

B+
D+

AS A4050

ORIGINAL
63321862

FIAT
46774429
12V 140A

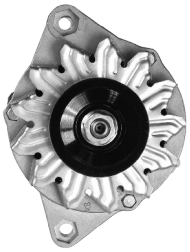
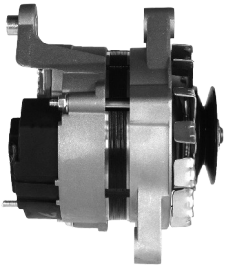

B+
D+

AS A4051

ORIGINAL
63321160

HC PARTS
CA822IR
12V 50A
A:45 B:22.5
C:77.5

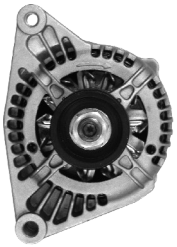
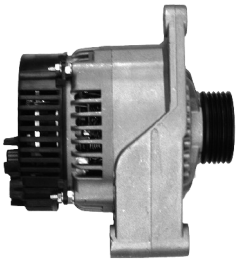

B+
D+

AS A4052

ORIGINAL
63321671

HC PARTS
CA1305IR
12V 65A
A:75 B:56
C:

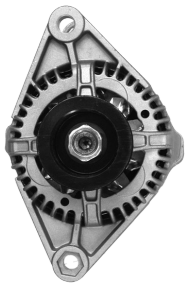
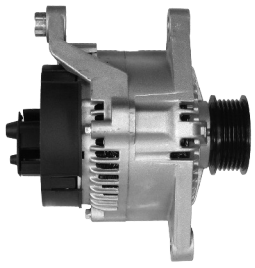

B+
D+

AS A4053

ORIGINAL
63321620

HC PARTS
CA1565IR
12V 90A
A:41 B:17
C:82.5

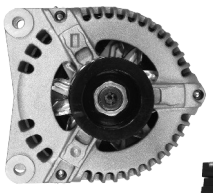
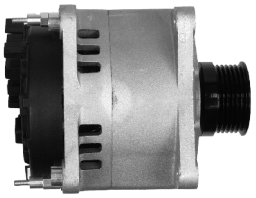

|O|O|O|
W D+ B+

AS A4054

ORIGINAL
63320317

HC PARTS
CA1651IR
12V 85A
A:39.5 B:14
C:70

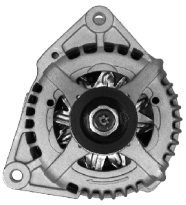
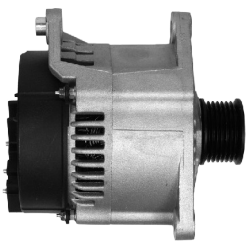

|O|O|O|
W D+ B+

AS A4055

ORIGINAL
63321321

HC PARTS
CA1337IR
12V 100A
A:31 B:14
C:83

ALTERNATORS
MAGNETI MARELLI/LUCAS

B+
D+

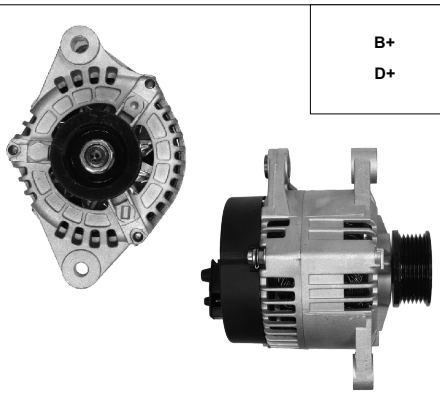

AS A4056

ORIGINAL	HC PARTS
63321491	CA1753IR
63321858	12V 120A
	A:45 B:22
	C:54.5

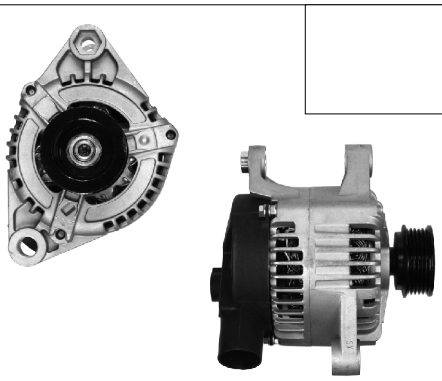

AS A4057

ORIGINAL	HC PARTS
63321253	CA1219IR
	12V 85A
	A:59 B:25
	C:71

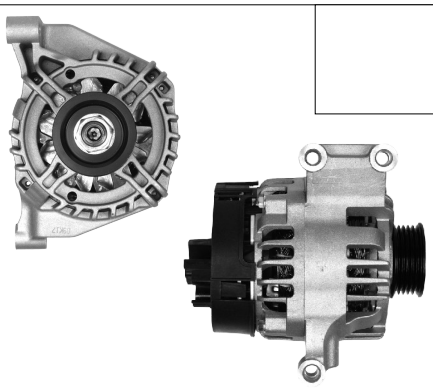

AS A4058

ORIGINAL	HC PARTS
63321718	CA1742IR, CA1766IR
63321765	12V 75/85A
63321775	A:17.5 B:24
63377006	C:50.5

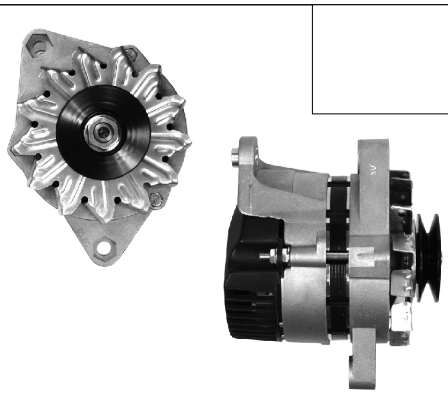

AS A4059

ORIGINAL	HC PARTS
63303610	CA252IR
63305401	12V 55A
63307401	A:52 B:23.5
63307431	C:74.5

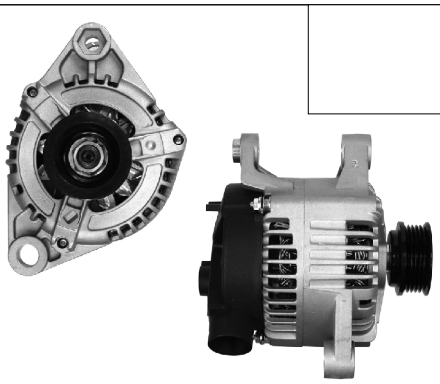

AS A4060

ORIGINAL	HC PARTS
63320277	CA1221IR
63321328	12V 85A
	A:58 B:25
	C:72

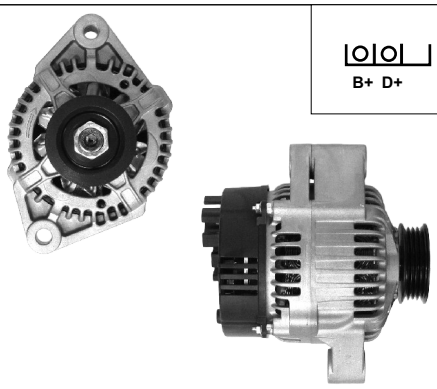

AS A4061

ORIGINAL	HC PARTS
63321658	CA1625IR
	12V 75A
	A:90.5 B:58
	C:

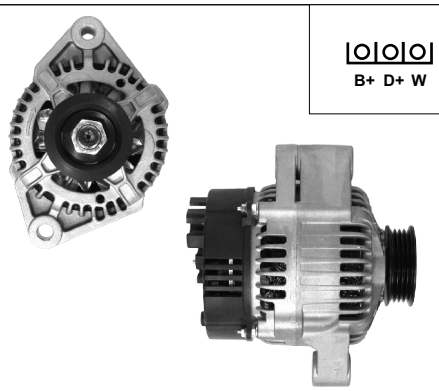

AS A4062

ORIGINAL	HC PARTS
63341658	CA1734IR
	12V 75A
	A:90 B:58
	C:

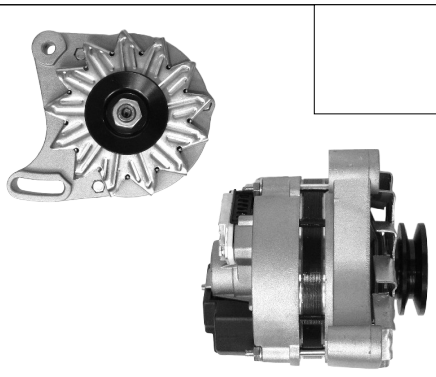

AS A4063

ORIGINAL	HC PARTS
63320034	CA350IR, CA572IR
63321067	12V 55A
63321198	A:57.5 B:32
	C:

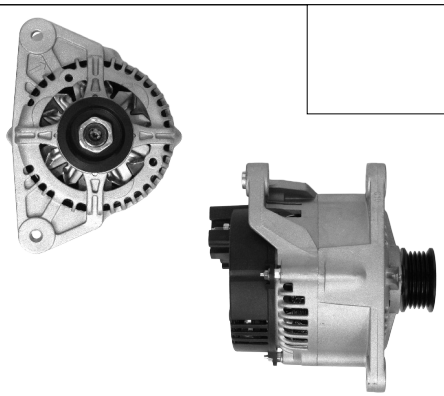

AS A4064

ORIGINAL	HC PARTS
63321636	CA1488IR
63321727	12V 65A
63341636	A:36.5 B:14
63341727	C:75

A, B, C - page 5

Electric conections - page 4

ALTERNATORS
MAGNETI MARELLI/LUCAS

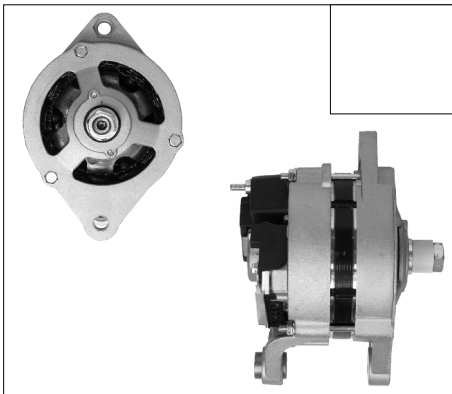

AS A4065

ORIGINAL	HC PARTS
63221024	CA506IR, CA1435IR
63305801	12V 65A
63307801	A: B:16.5
63320003	C:64

AS A4066

ORIGINAL	HC PARTS
NAB900M	CA1550IR
	12V 70A
	A:34-43 B:11
	C:85

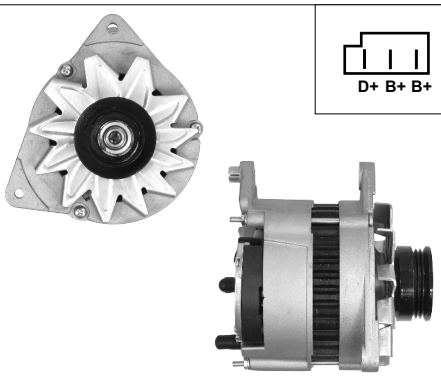

AS A4067

ORIGINAL	HC PARTS
24260	CA561IR
54022313	12V 55A
54022581	A:43.5 B:11.5
54022595	C:83

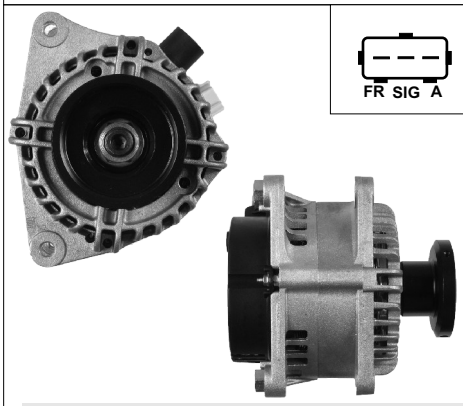

AS A4068

ORIGINAL	HC PARTS
63377421	CA1989IR
MAN7421	12V 105A
	A: B:
	C:

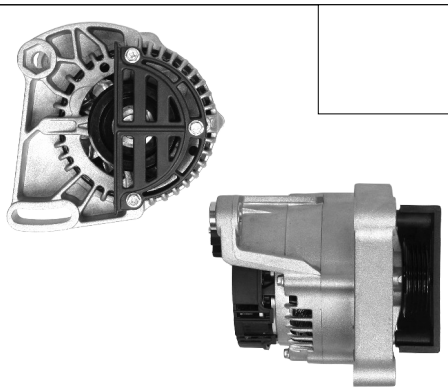

AS A4069

ORIGINAL	HC PARTS
63321235	CA1154IR
63321281	12V 75A
63321300	A:44 B:32.5
63321603	C:83.5

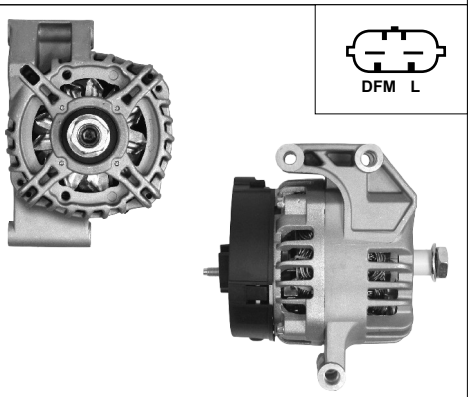

AS A4070

ORIGINAL	HC PARTS
63377424	CA1956IR
	12V 100A
	A:39 B:64
	C:55

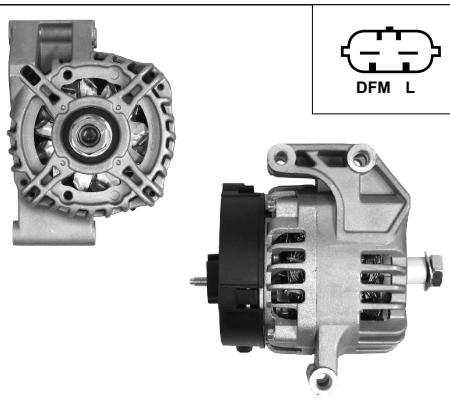

AS A4071

ORIGINAL	HC PARTS
63377425	CA1987IR
	12V 120A
	A:41 B:64
	C:55

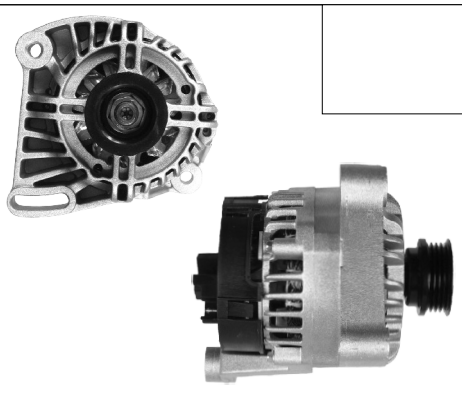

AS A4072

ORIGINAL	HC PARTS
63377011	CA1886IR
063377011010	12V 70A
	A:67.5 B:32
	C:

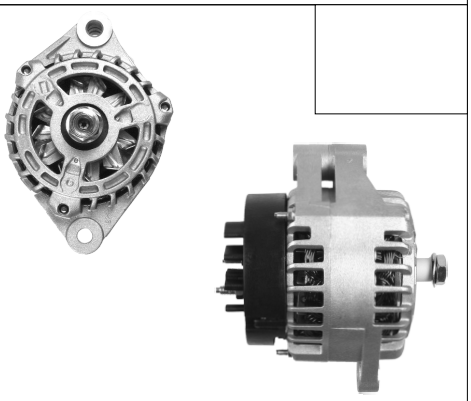

AS A4073

ORIGINAL	HC PARTS
63377004	CA1885IR
63377490	12V 120A
	A:113 B:61
	C:

A, B, C - page 5

Electric conections - page 4

ALTERNATORS
MAGNETI MARELLI/LUCAS

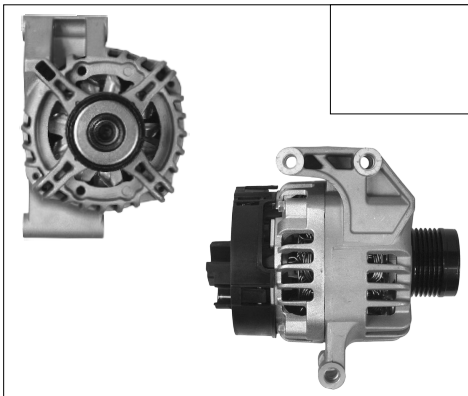

AS A4074

ORIGINAL	HC PARTS
LRA02792	CA1862IR
LRA02804	12V 90A
101210-1120	A:41 B:64
101210-1190	C:55

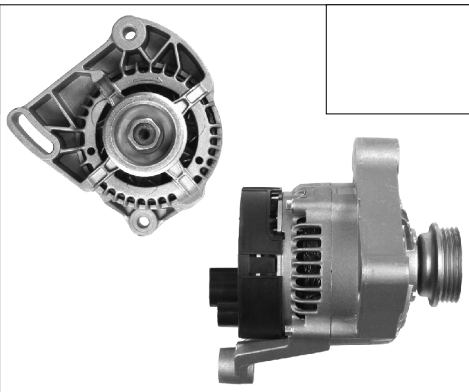

AS A4075R

ORIGINAL	HC PARTS
63321626	CA1349IR
63321788	12V 65A
	A:68 B:32
R - rebuild	C:

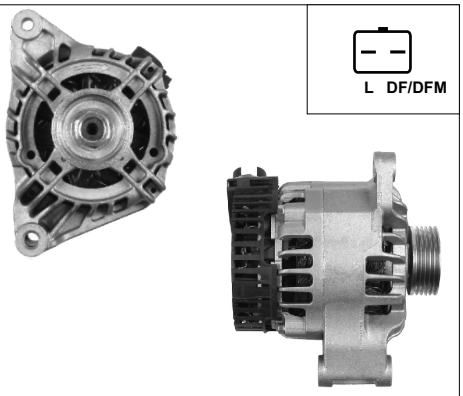

L DF/DFM

AS A4076R

ORIGINAL	HC PARTS
63321741	CA1640IR
	12V 70A
	A:75 B:56
R - rebuild	C:

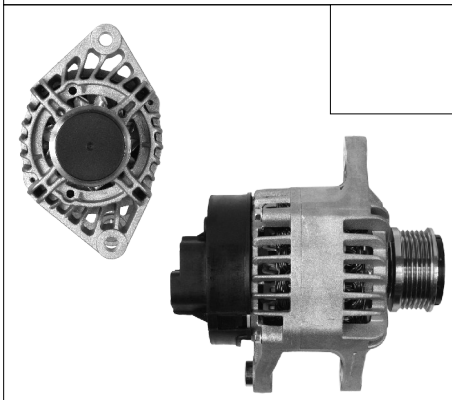

AS A4077

ORIGINAL	HC PARTS
63321819	CA1697IR
063321819010	12V 90A
	A:44.5 B:17
R - rebuild	C:54.5

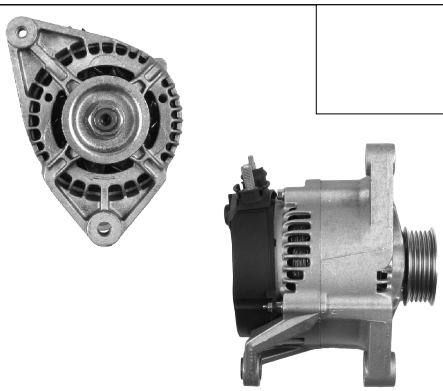

AS A4078R

ORIGINAL	HC PARTS
63321348	JA1175IR
63321693	12V 80A
	A:38 B:25
R - rebuild	C:81

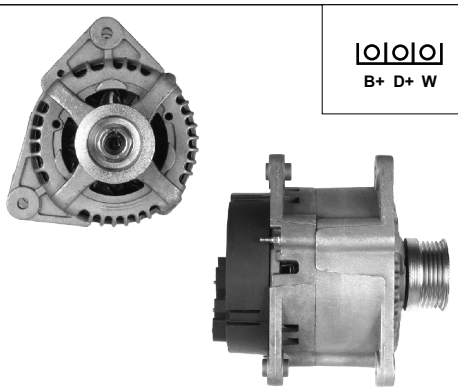

B+ D+ W

AS A4079R

ORIGINAL	HC PARTS
63320309	CA1100IR
63321351	12V 85A
	A:39 B:14
R - rebuild	C:70

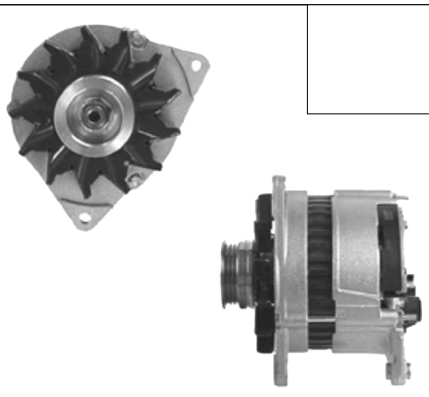

AS A4080

ORIGINAL	HC PARTS
54022574	CA1508IR
54022665	12V 70A
	A:35 B:11.5
	C:83

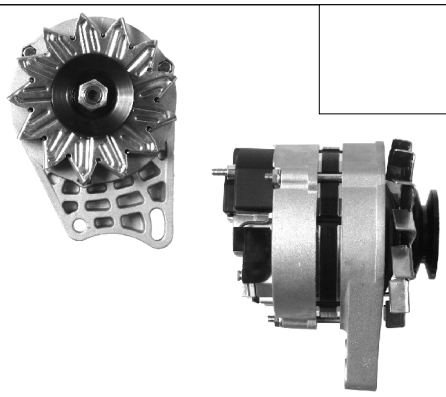

AS A4081

ORIGINAL	HC PARTS
63303502	CA307IR
63303701	12V 45A
63303703	A:54 B:23.5
63306701	C:

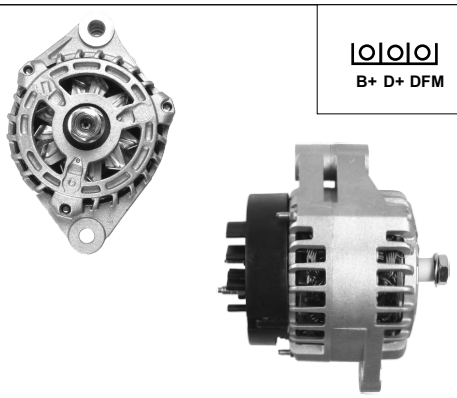

B+ D+ DFM

AS A4082

ORIGINAL	HC PARTS
101210-0160	CA1952IR
101210-0161	12V 130A
101210-0162	A:113 B:61
	C:

A, B, C - page 5

Electric conections - page 4

ALTERNATORS
MAGNETI MARELLI/LUCAS

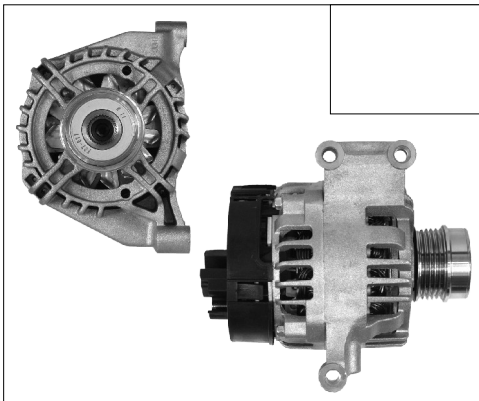

AS A4083

ORIGINAL	HC PARTS
63377426	CA1969IR
MAN7426	12V 120A
101210-1080	A:16 B:
101210-1081	C:50.5

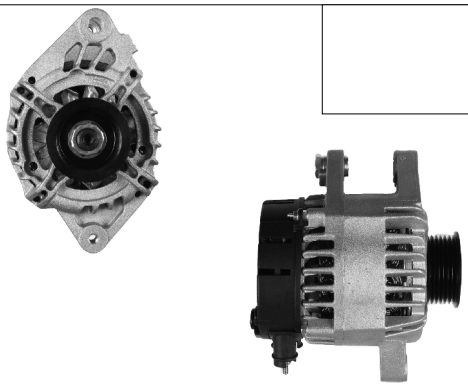

AS A4084

ORIGINAL	HC PARTS
102211-8740	CA1949IR
102211-8741	12V 80A
27060-0Q020	A:40.5 B:19.5
27060-0Q021	C:42

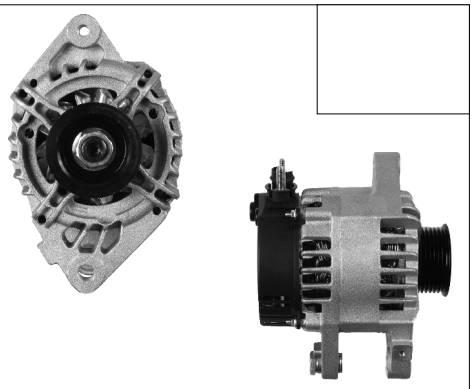

AS A4085

ORIGINAL	HC PARTS
102211-8730	CA1978IR
102211-8731	12V 70A
27060-0Q010	A:29 B:20
27060-0Q011	C:42

ALTERNATORS
MITSUBISHI

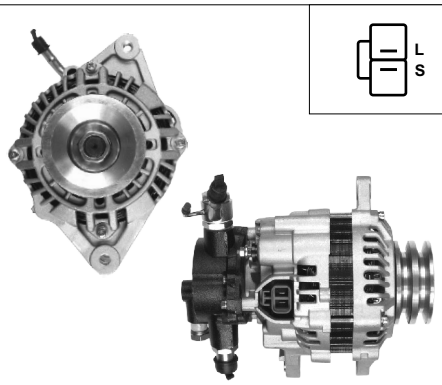

AS A5001

ORIGINAL	HC PARTS
A2TN0399	JA1179IR
MD304129	12V 65A
	A:42 B:13
	C:55

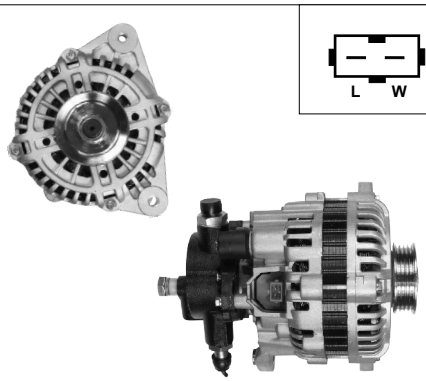

AS A5002

ORIGINAL	HC PARTS
A3TN1791	CA1317IR
98VB-10K359-BA	12V 95A
98VB-10K359-BB	A:34 B:13
98VB-10K359-BC	C:82

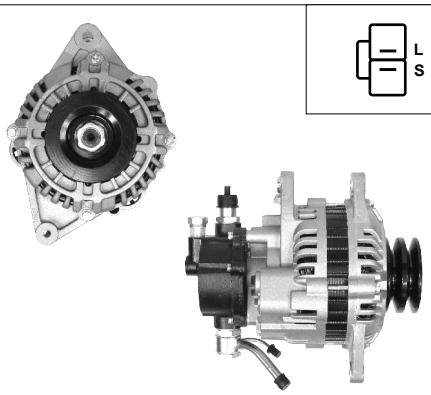

AS A5003

ORIGINAL	HC PARTS
A3TN0699	JA1419IR
MD320354	12V 90A
	A:43 B:13
	C:55

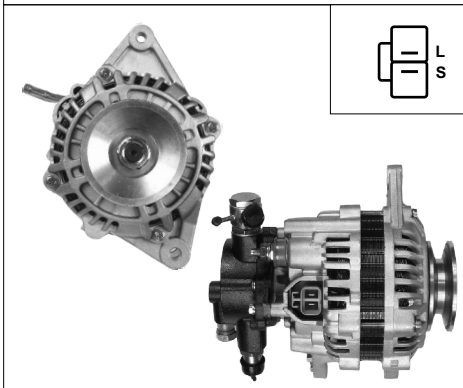

AS A5004

ORIGINAL	HC PARTS
A3T07483	JA1184IR
	12V 90A
	A:46 B:13.2
	C:55

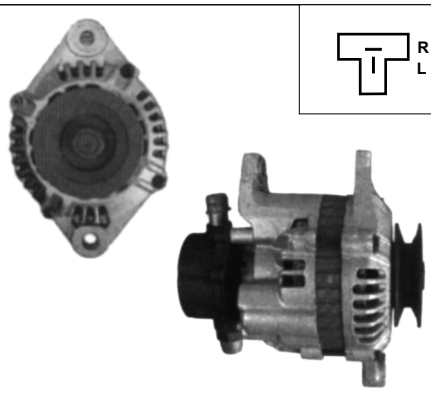

AS A5005

ORIGINAL	HC PARTS
A3T76682	JA1524IR
ME017600	24V 40A
	A:46 B:13
	C:81

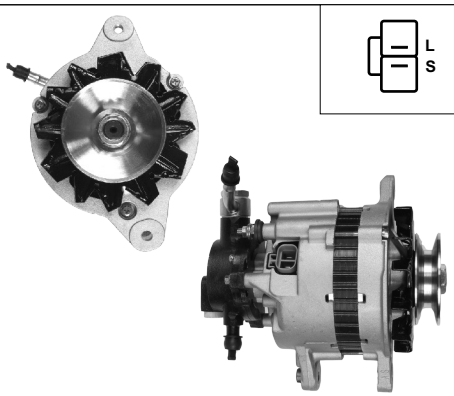

AS A5006

ORIGINAL	HC PARTS
A2T01483	JA585IR
A2T01583	12V 60A
A2T01783	A:44 B:13
A2T10083	C:54

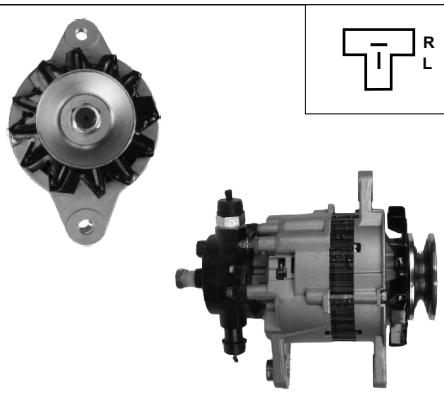

AS A5007

ORIGINAL	HC PARTS
A5T70183	JA972IR
A5T70283	24V 25A
ME017561	A:46 B:13
	C:80

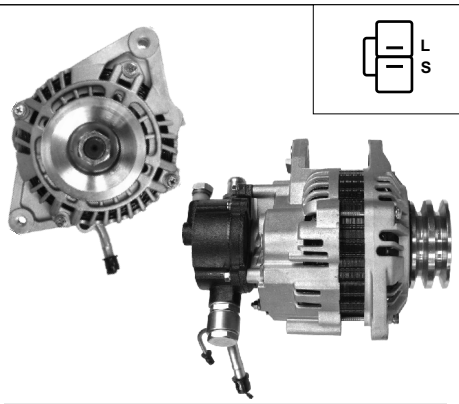

AS A5008

ORIGINAL	HC PARTS
A2T82899	JA1183IR
A2TN0499	12V 65A
MD306649	A:42 B:13
	C:55

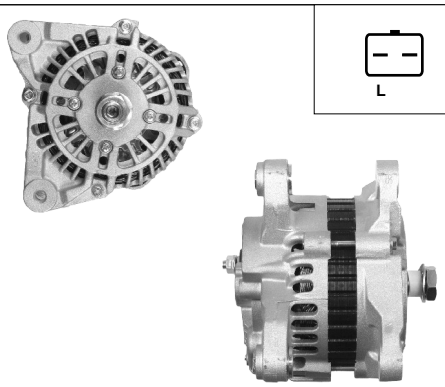

AS A5009

ORIGINAL	HC PARTS
A2TB6481	CA1652IR
	12V 110A
	A:42 B:15
	C:57

A, B, C - page 5

Electric conections - page 4

ALTERNATORS
MITSUBISHI

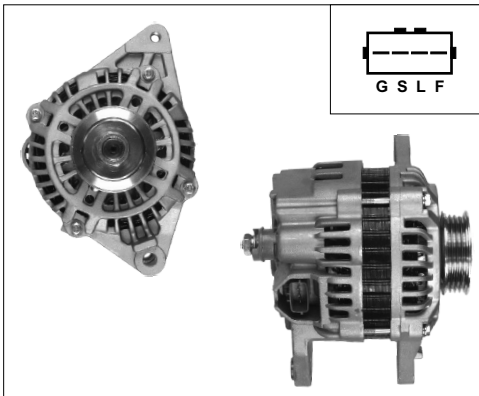

AS A5010

ORIGINAL
A2TA5391

HC PARTS
JA1523IR
12V 85A
A:38 B:13
C:65

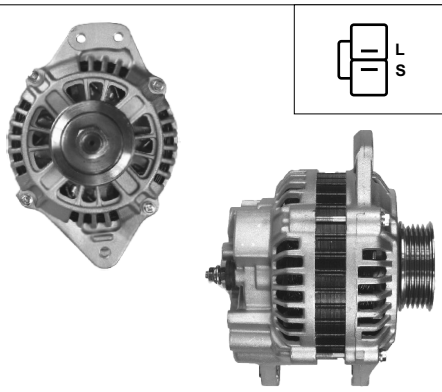

AS A5011

ORIGINAL
A3T45794

HC PARTS
JA870IR
12V 90A
A:39 B:13
C:55

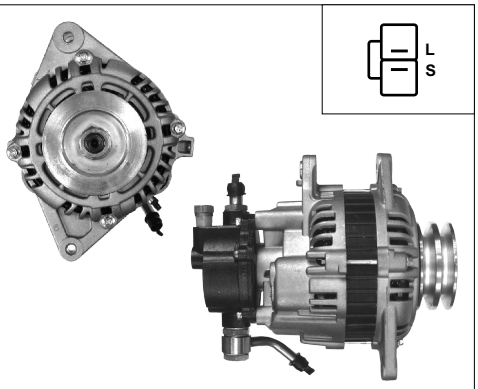

AS A5012

ORIGINAL
A3T05499

HC PARTS
JA983IR
12V 75A
A:43 B:13
C:54

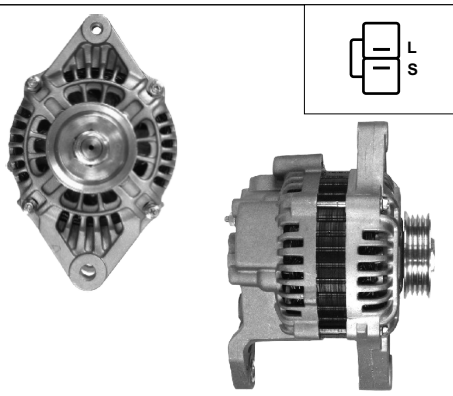

AS A5013

ORIGINAL
A5T00192

HC PARTS
JA653IR
12V 65A
A:39 B:25
C:81

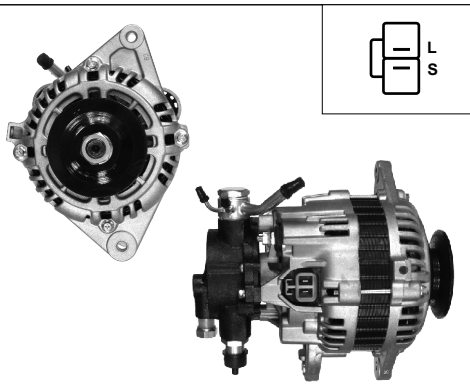

AS A5014

ORIGINAL
A3T08183

HC PARTS
JA878IR
12V 75A
A:45 B:13
C:55

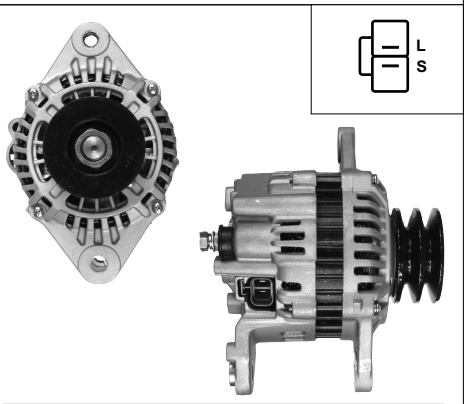

AS A5015

ORIGINAL
A3TA4399

HC PARTS
JA1594IR
12V 100A
A:44 B:13
C:81

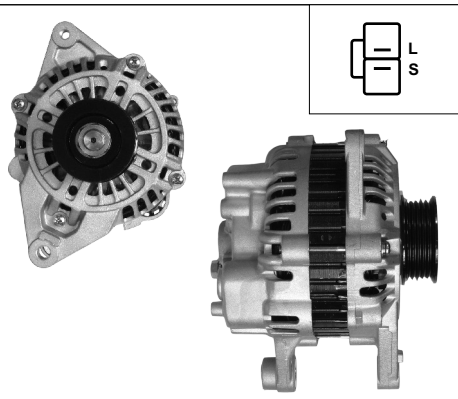

AS A5016

ORIGINAL
A3TA0791

HC PARTS
JA1180IR
12V 90A
A:24.0 B:17
C:55

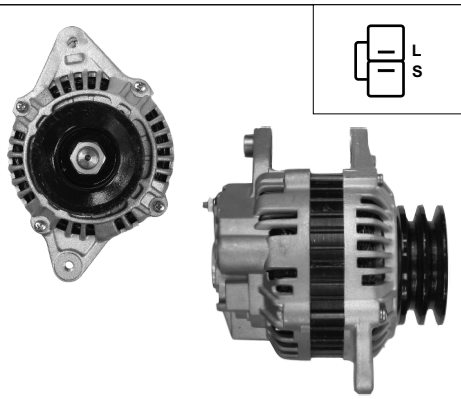

AS A5017

ORIGINAL
A3T09198

HC PARTS
JA1376IR
12V 90A
A:43 B:13
C:54

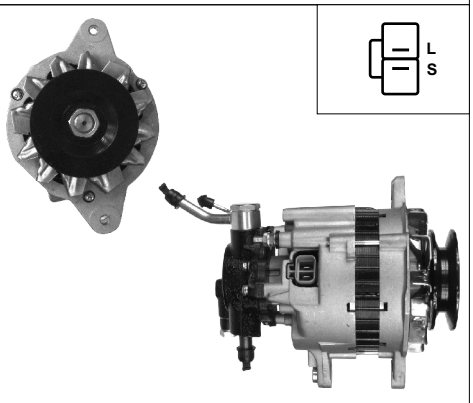

AS A5018

ORIGINAL
A2T17783

HC PARTS
JA674IR
12V 65A
A:44 B:14
C:54

ALTERNATORS
MITSUBISHI

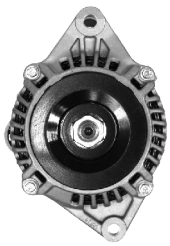
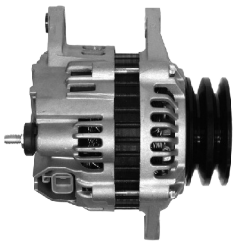

L S

AS A5019

ORIGINAL
A2TB1298

HC PARTS
JA1515IR
12V 80A
A:42 B:13
C:65.5

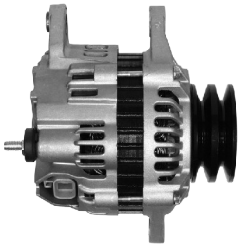

L S

AS A5020

ORIGINAL
A2TA6099

HC PARTS
JA1530IR
12V 70A
A:41.5 B:13
C:65

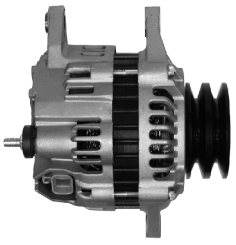

L S

AS A5021

ORIGINAL
A3T05499

HC PARTS
JA1513IR
12V 80A
A:41.5 B:13
C:65

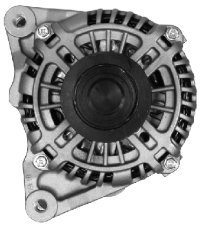
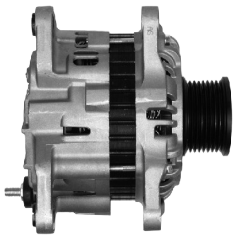

L S

AS A5022

ORIGINAL
A3TB4981

HC PARTS
JA1896IR
12V 90A
A:39 B:13
C:67

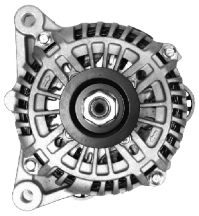

L DF/DFM

AS A5023

ORIGINAL
A3TB2691

HC PARTS
CA1741IR
12V 120A
A:43 B:22
C:45

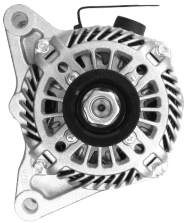
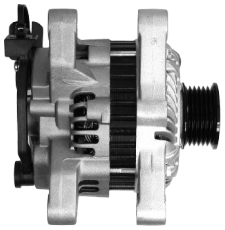

L DF

AS A5024

ORIGINAL
A5TA6292

HC PARTS
CA1687IR, CA1832IR
12V 70A
A:42 B:22.5
C:45.5

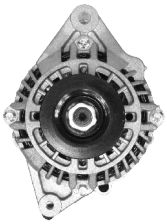
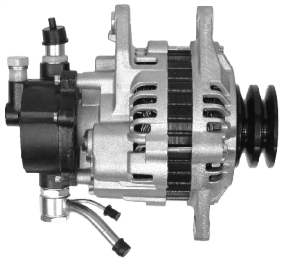

L S

AS A5025

ORIGINAL
A2TN1798
MD340419
MD366052

HC PARTS
JA1533IR
12V 80A
A:42.0 B:13
C:55

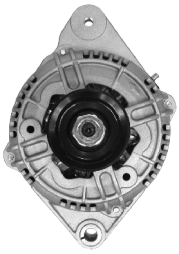
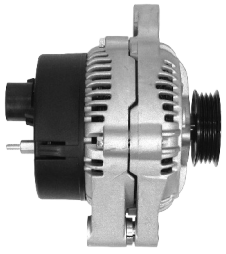

IG FR L

AS A5026

ORIGINAL
A5T04092
A5T06291
A5T06391

HC PARTS
JA1405IR
12V 75A
A:90 B:58
C:

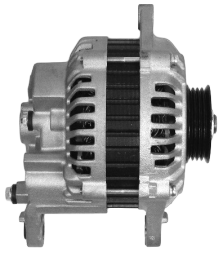

L S

AS A5027

ORIGINAL
A3T45691
A3T45693
A3T45694

HC PARTS
JA684IR
12V 90A
A:35 B:13
C:78

A, B, C - page 5

Electric conections - page 4

ALTERNATORS
MITSUBISHI

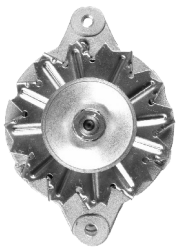
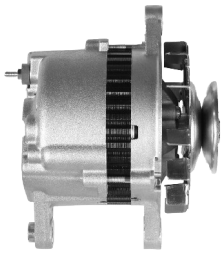
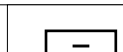

AS A5028

ORIGINAL
A1T33771

HC PARTS
JA171IR
12V 40A
A:41 B:13.5
C:67

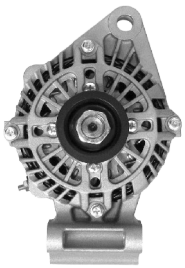
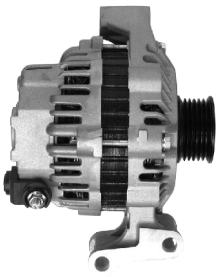
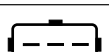

AS A5029

ORIGINAL
A5TA7792

HC PARTS
CA1780IR
12V 90A
A:11 B:72
C:52

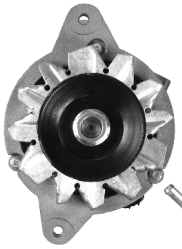
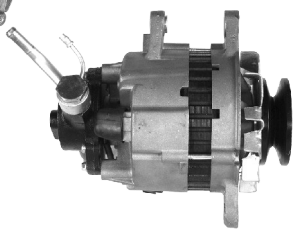
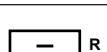

AS A5030R

ORIGINAL
A2T40484
A2T43183

R - rebuild

HC PARTS
JA663IR
12V 55A
A:46 B:13
C:54

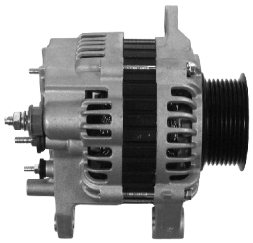

AS A5031

ORIGINAL
A3TA8591

A:44.5 B:27
C:66

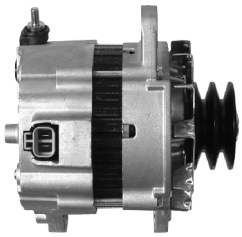

AS A5032

ORIGINAL
A4TU6888
ME221165 24V 80A

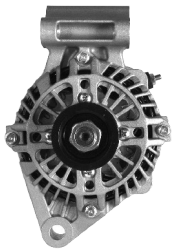
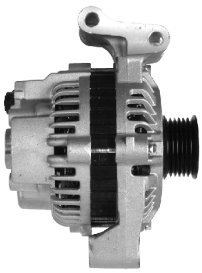
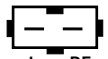

AS A5033

ORIGINAL
A5TA4391
A5TA6591

HC PARTS
CA1474IR
12V 70A
A:10 B:72.5
C:

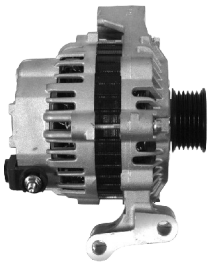

AS A5034

ORIGINAL
A5TA7692

HC PARTS
CA1737IR
12V 80A
A:9.5 B:72
C:53

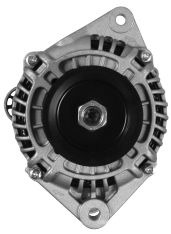
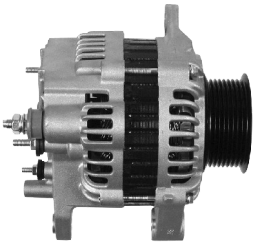

AS A5035

ORIGINAL
A3TA8291
A3TA8291RR

HC PARTS
CA1852IR
24V 60A
A:27 B:67
C:

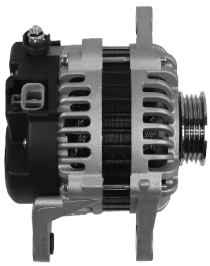

AS A5036

ORIGINAL
A2T33991
A2T33991A

HC PARTS
JA877IR
12V 70A
A:38 B:13
C:67

A, B, C - page 5

Electric conections - page 4

ALTERNATORS
NIPPONDENSO

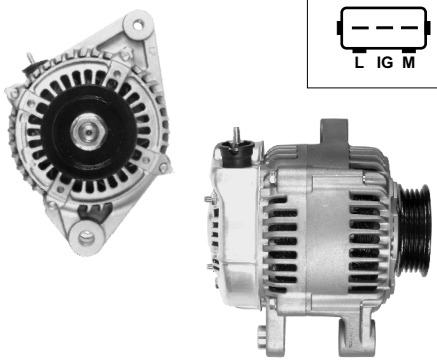

AS A6001

ORIGINAL
102211-1680

HC PARTS
JA1517IR
12V 90A
A:47.5 B:27
C:39

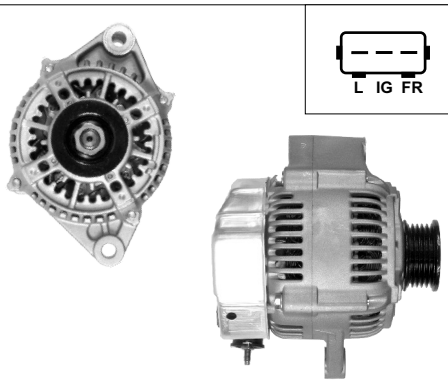

AS A6002

ORIGINAL
102211-1451

HC PARTS
JA1723IR
12V 90A
A:90 B:58
C:

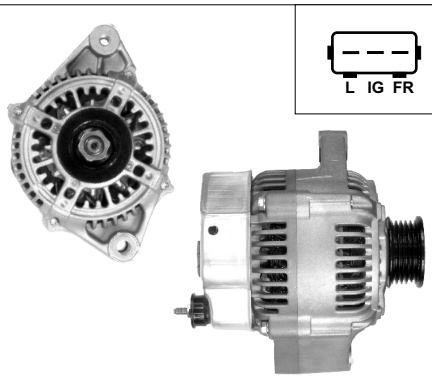

AS A6003

ORIGINAL
102211-1461

HC PARTS
JA1608IR
12V 90A
A:90 B:58
C:

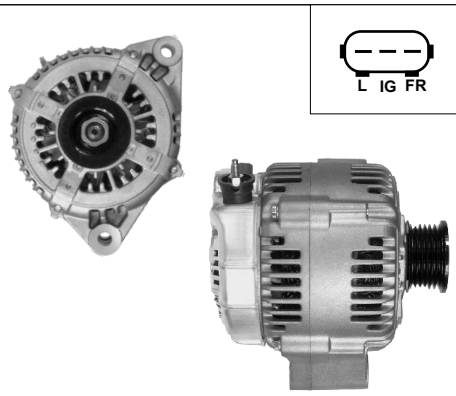

AS A6004

TOYOTA
27060-17120

24V 60A
A: B:
C:

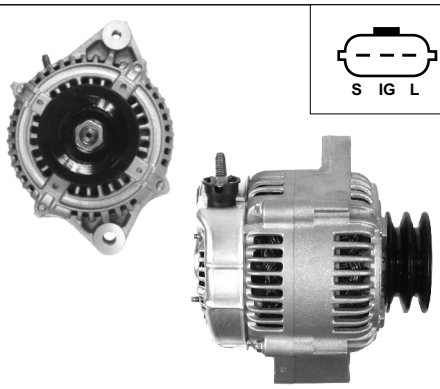

AS A6005

ORIGINAL
101211-7010

TOYOTA
27060-17180
12V 110A
A: B:
C:

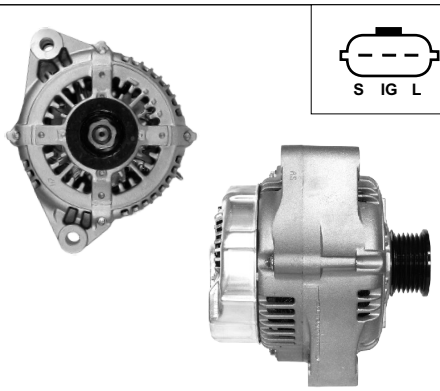

AS A6006

ORIGINAL
102211-0800

LUCAS
LRA2173
12V 115A
A:92 B:58
C:

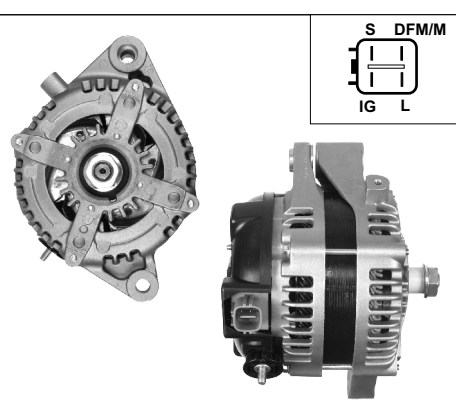

AS A6007

ORIGINAL
104210-3431

TOYOTA
27060-27090

HC PARTS
CA1950IR
12V 90A
A: B:
C:

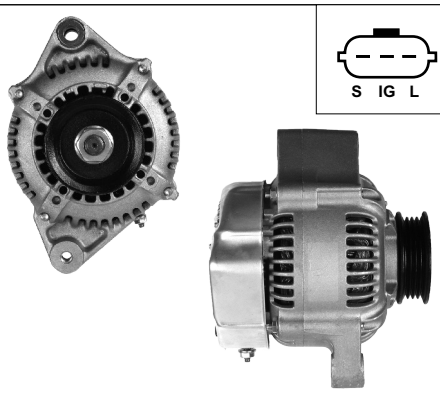

AS A6009

ORIGINAL
A3T09198

HC PARTS
JA988IR
12V 70A
A:90 B:58.5
C:

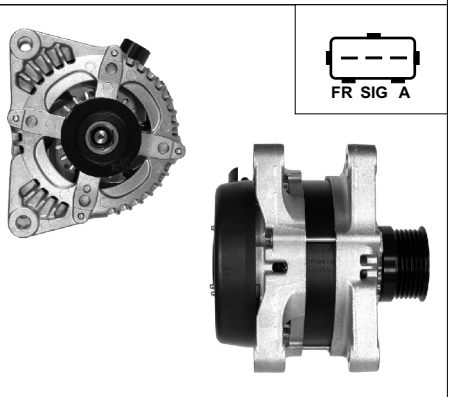

AS A6010

ORIGINAL
104210-3511
104210-3512
104210-3513

HC PARTS
CA1865IR
12V 120A
A:42.5 B:21
C:45

A, B, C - page 5

Electric conections - page 4

ALTERNATORS
NIPPONDENSO

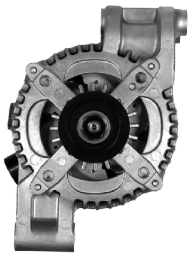
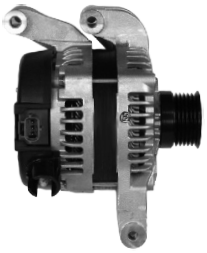
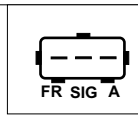

AS A6011

ORIGINAL
104210-3760
104210-3761
104210-3762
104210-5790

HC PARTS
CA1864IR
12V 120A
A:74 B:72
C:69

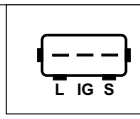

AS A6012

ORIGINAL
101211-0060

HC PARTS
JA976IR
12V 70A
A:52 B:28
C:41

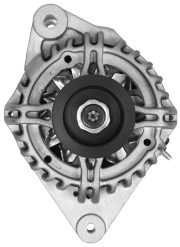
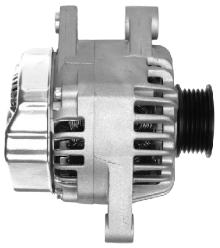
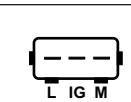

AS A6013

ORIGINAL
102211-8010

HC PARTS
JA1800IR
12V 90A
A:48 B:27
C:39

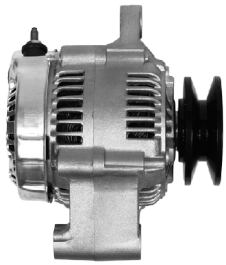

AS A6014

ORIGINAL
107TA9483

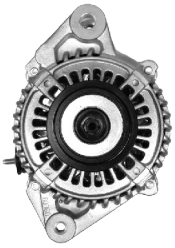

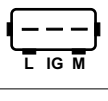

AS A6015

ORIGINAL
102211-2780

HC PARTS
JA1891IR
12V 90A
A:31.5 B:16.5
C:41

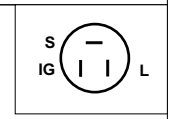

AS A6016

ORIGINAL
100211-7170
100211-7370

HC PARTS
JA984IR
24V 30A
A:95 B:58
C:

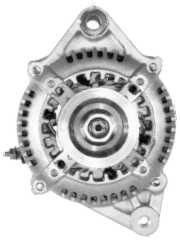
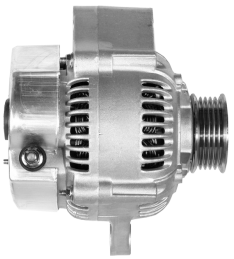
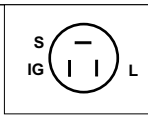

AS A6017

ORIGINAL
100211-3352
100211-7000
100211-7050
100211-8030

HC PARTS
JA552IR
12V 70A
A:90 B:58
C:

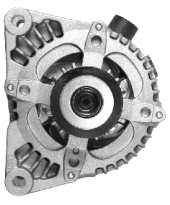

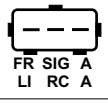

AS A6018

ORIGINAL
104210-3521

HC PARTS
CA1834IR
12V 150A
A:42.5 B:21
C:45.5

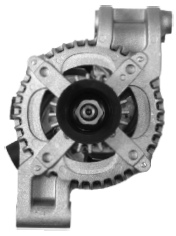
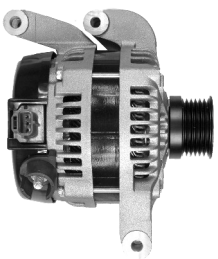
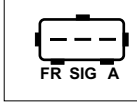

AS A6019

ORIGINAL
104210-5800
104210-3530
104210-3531
104210-3532

HC PARTS
CA1926IR
12V 120A
A:74 B:
C:69

A, B, C - page 5

Electric conections - page 4

ALTERNATORS
NIPPONDENSO

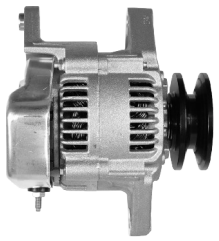
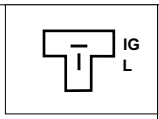

AS A6020

ORIGINAL	HC PARTS
100211-4000	JA792IR
100211-4001	12V 40A
100211-4002	A:47.5 B:20
100211-4003	C:67

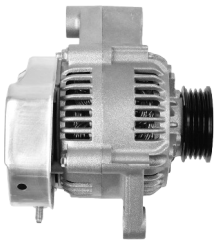
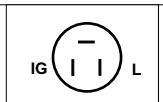

AS A6021

ORIGINAL	HC PARTS
100211-9310	JA764IR
101211-2100	12V 45A
101211-3040	A:90 B:58
101211-3200	C:

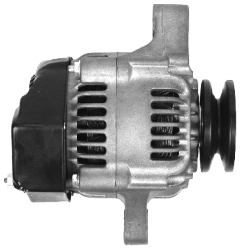
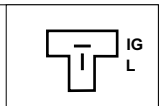

AS A6022R

ORIGINAL	HC PARTS
100211-1661	JA971IR
100211-1662	12V 35A
	A:43 B:24
R - rebuild	C:

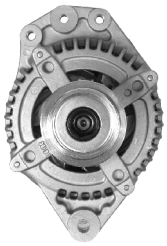

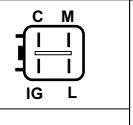

AS A6023

ORIGINAL	HC PARTS
104210-3730	
104210-3731	12V 100A
104210-3732	A:31.5 B:16
104210-3740	C:41.5

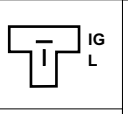

AS A6024

ORIGINAL	HC PARTS
100211-3370	JA880IR
100211-5730	12V 45A
100211-6660	A:95.5 B:58
100211-6730	C:

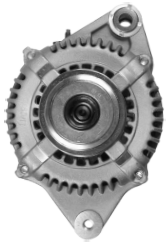
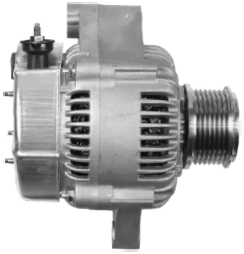
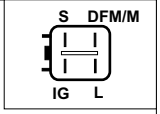

AS A6025

ORIGINAL	HC PARTS
102211-2310	JA1796IR
102211-2810	12V 80A
102211-5600	A:95 B:58
104210-8020	C:

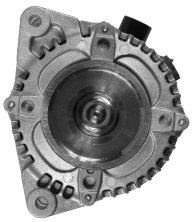

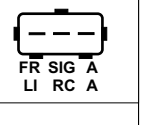

AS A6026

ORIGINAL	HC PARTS
104210-3630	CA1941IR, CA1999IR
104210-2730	12V 150A
104210-3640	A: B:14.5
104210-3641	C:52

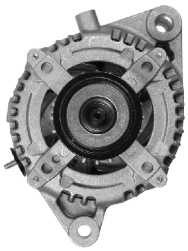

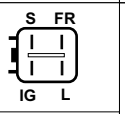

AS A6027

ORIGINAL	HC PARTS
104210-3050	JA1721IR
104210-3051	12V 130A
104210-3052	A:92 B:53
104210-3060	C:

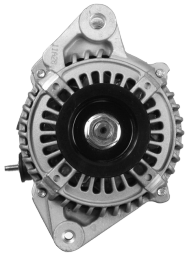

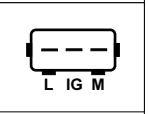

AS A6028

ORIGINAL	HC PARTS
102211-1960	JA1595IR
	12V 90A
	A:33 B:18
	C:41.5

A, B, C - page 5

Electric conections - page 4

ALTERNATORS
NIPPONDENSO

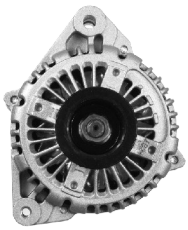
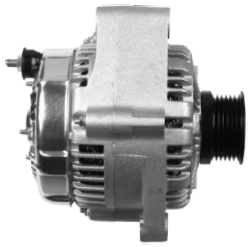
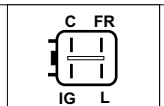

AS A6029

ORIGINAL
102211-0860

12V 120A
A:95 B:58
C:

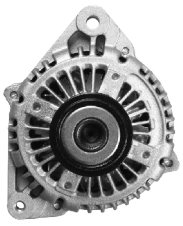
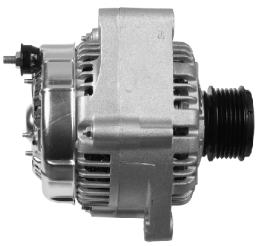
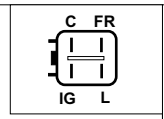

AS A6030

ORIGINAL
102211-0870

12V 120A
A:95 B:58
C:

AS A6031(DENSO)R

ORIGINAL
101211-6340

24V
A: B:
C:

R - rebuild

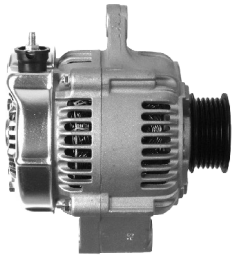
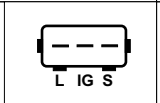

AS A6032

ORIGINAL
101211-0580
101211-0581
101211-0582
101211-5720

HC PARTS
JA1369IR
12V 70A
A:90 B:58
C:

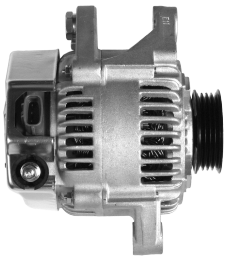
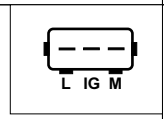

AS A6033

ORIGINAL
102211-1950
102211-1951
102211-9070
102211-9100

HC PARTS
JA1794IR
12V 80A
A:33 B:18
C:41.5

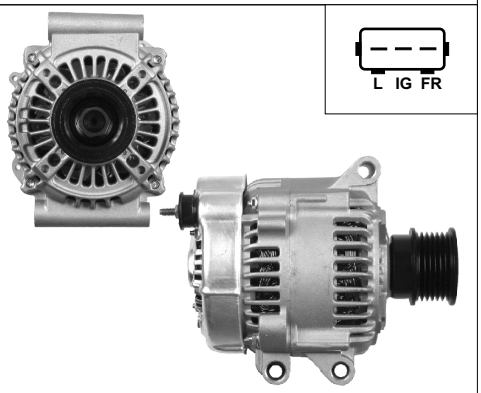

AS A6034

ORIGINAL
102211-2230
102211-2231
102211-2232
102211-2233

HC PARTS
CA1869IR
12V 105A
A:55 B:83
C:43.5

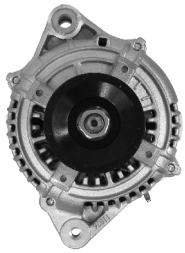
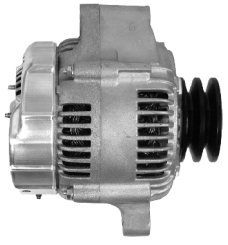
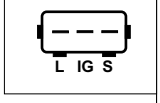

AS A6035

ORIGINAL
101211-7870
101211-7871
101211-7872

HC PARTS
JA1724IR
12V 120A
A:91.5 B:58
C:

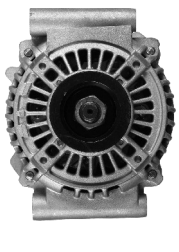

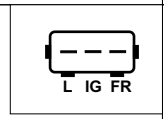

AS A6036

ORIGINAL
102211-2220
102211-2221
102211-2222
102211-2223

HC PARTS
CA1676IR
12V 105A
A:38 B:83
C:43.5

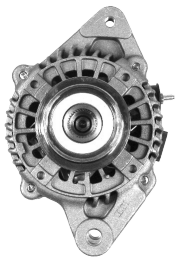
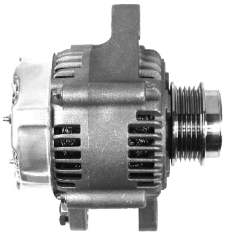
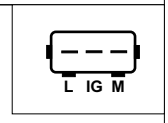

AS A6037

ORIGINAL
102211-5660

HC PARTS
JA1893IR
12V 70A
A:31.5 B:16
C:41

A, B, C - page 5

Electric conections - page 4

ALTERNATORS
NIPPONDENSO

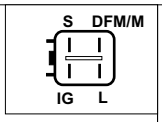

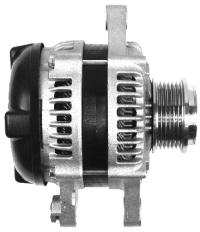

AS A6038

ORIGINAL
104210-4101
104210-5150

HC PARTS
CA1964IR
12V 100A
A:30 B:16
C:41

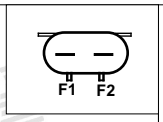

AS A6039

ORIGINAL
421000-0081
421000-0082
421000-0083

HC PARTS
CA2021IR
12V 160A
A:45.5 B:14
C:60

A, B, C - page 5

Electric conections - page 4

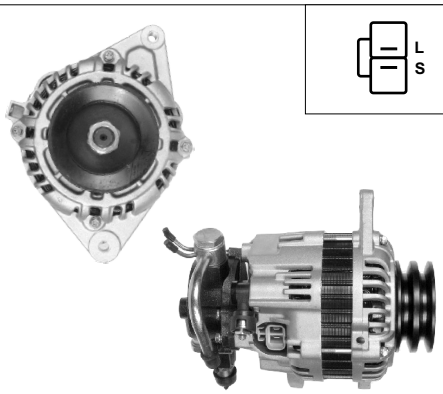

AS A9001

HYUNDAI / KIA
37300-42355
37300-42357
37300-42358

HC PARTS
JA1518IR
12V 110A
A:42 B:13
C:55

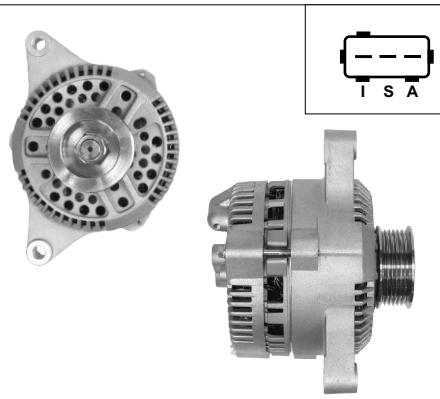

AS A9002

FORD
96BB10300BA
96BB10300BB
F5RU10300BE
F6RU10300AA

HC PARTS
CA1316IR
12V 130A
A:50 B:25.7
C:

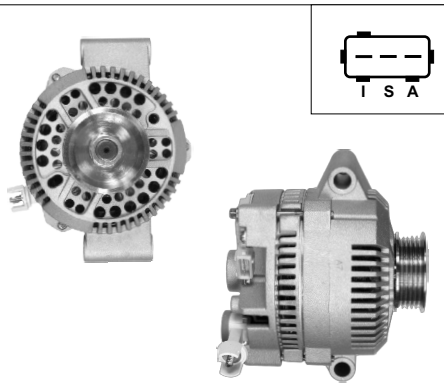

AS A9003

FORD
93BB10300FD
97BB10300BB
1032652
1090424

HC PARTS
CA1034IR
12V 95A
A:47.5 B:57
C:

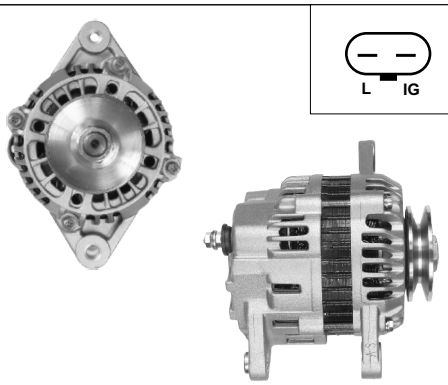

AS A9004

MANDO **DELCO**
AB165104 219170

HC PARTS
JA1600IR
12V 65A
A:43 B:16
C:66

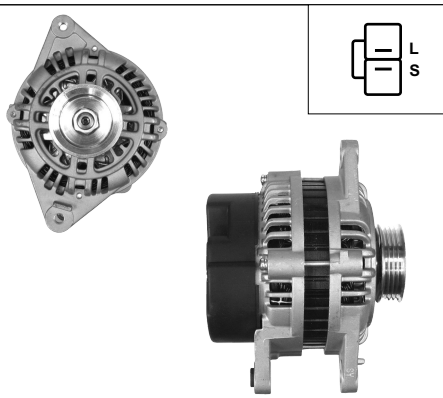

AS A9005

MANDO
AB190058
HYUNDAI / KIA
37300-22200

HC PARTS
JA994IR
12V 90A
A:36 B:13.1
C:55

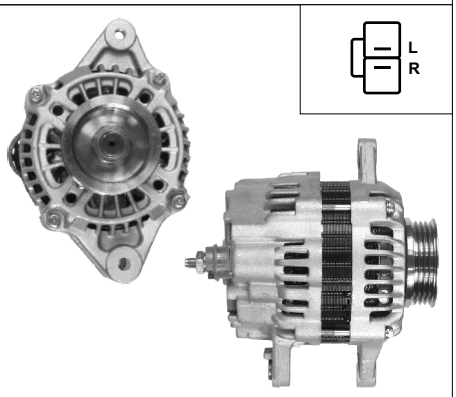

AS A9006

MANDO
AB160108
HYUNDAI / KIA
37300-02503

HC PARTS
JA1715IR
12V 60A
A:38 B:13
C:49

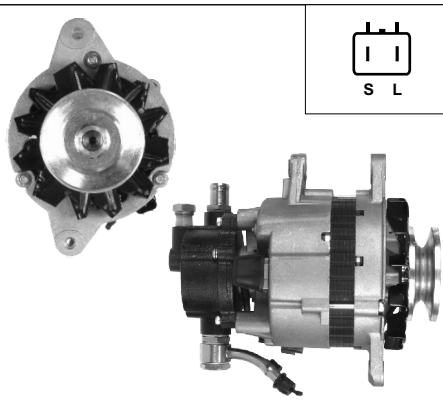

AS A9007

HYUNDAI / KIA
37300-42620

HC PARTS
JA1618IR
12V 65A
A:45 B:13
C:55

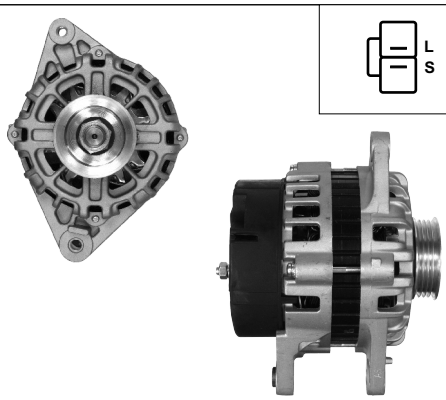

AS A9008

HYUNDAI / KIA
37300-22650

HC PARTS
JA1789IR
12V 90A
A:35 B:12.5
C:55

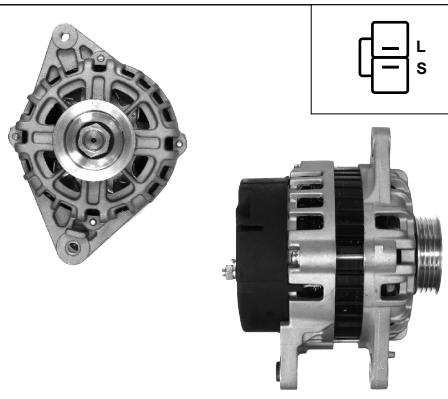

AS A9009

HYUNDAI / KIA
37300-22600

HC PARTS
JA1788IR
12V 80A
A:35 B:13
C:55

ALTERNATORS
OTHER

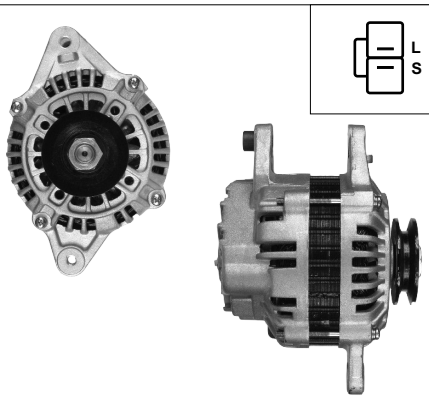

AS A9010

HYUNDAI / KIA
37300-32131

HC PARTS
JA888IR
12V 75A
A:43.5 B:13.5
C:54

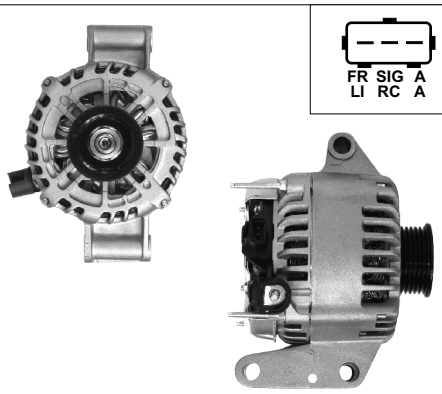

AS A9011

FORD
1S7T-10300-BA
1S7T-10300-BB
1S7T-10300-DB
1S7T-10300-DC

HC PARTS
CA1638IR
12V 115A
A:39 B:55
C:74

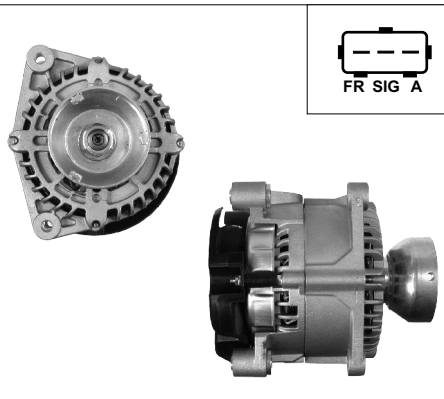

AS A9012

FORD
2T1U-10300-AB

HC PARTS
CA1857IR
12V 110A
A: B:14
C:69

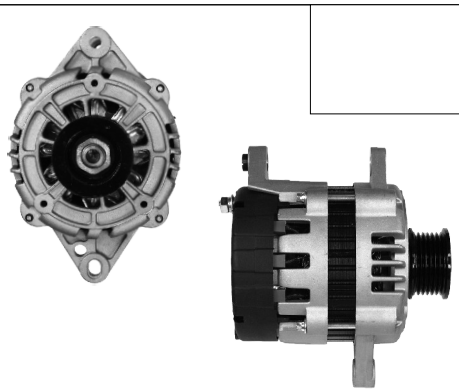

AS A9013

DELCO
96540541

CHEVROLET LACETTI 1.6
12V 85A

AS A9014

ELMOT
A115-34A

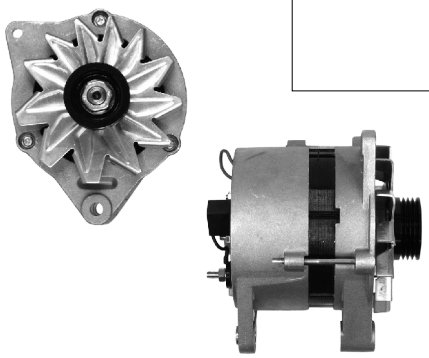

AS A9015

DELCO
DRA3993

LUCAS
LRB347

HC PARTS
CA850IR, (70A) CA1455IR
12V 55A
A:48 B:27
C:66

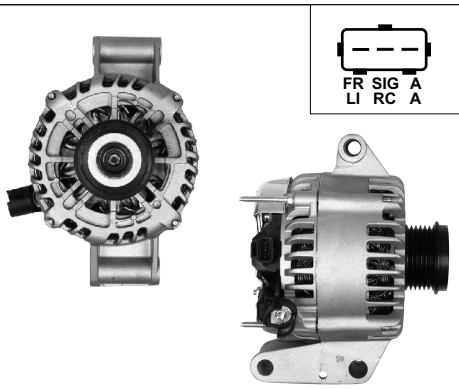

AS A9016

FORD
1120213
1140694
1151213

HC PARTS
CA1635IR
12V 115A
A:40 B:55
C:75

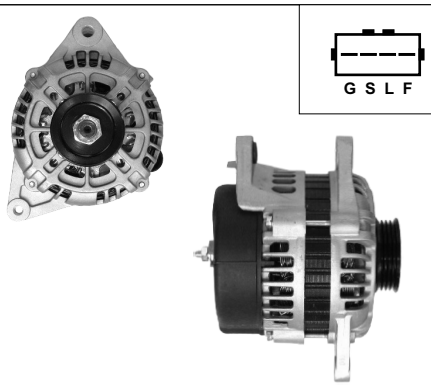

AS A9017

HYUNDAI / KIA
37300-38700

HC PARTS
JA1718IR
12V 95A
A:38.5 B:13
C:67

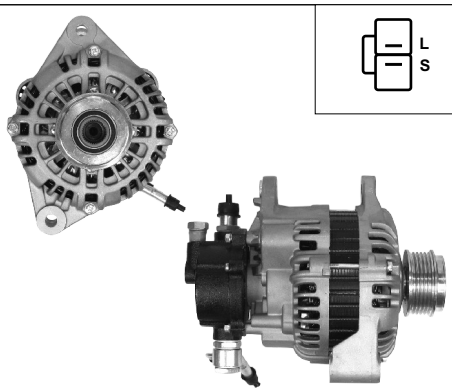

AS A9018

HYUNDAI / KIA
37300-4X000

HC PARTS
JA1709IR
12V 110A
A:47.5 B:13
C:80.5

A, B, C - page 5

Electric conections - page 4

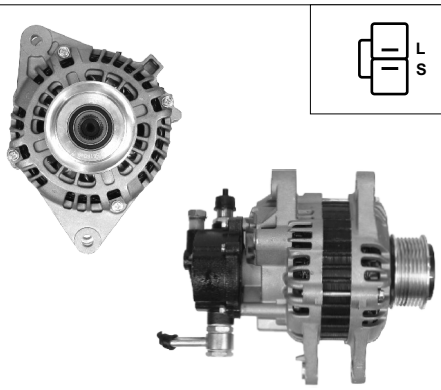

AS A9019

HYUNDAI / KIA
37300-4A001

HC PARTS
JA1804IR
12V 110A
A:43 B:16
C:55

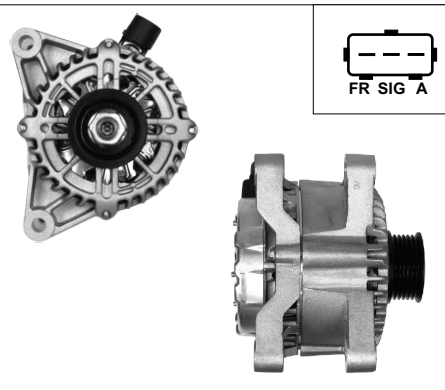

AS A9020

FORD
2S6T-10300-AA

HC PARTS
CA1777IR
12V 80A
A:42.5 B:21
C:45.5

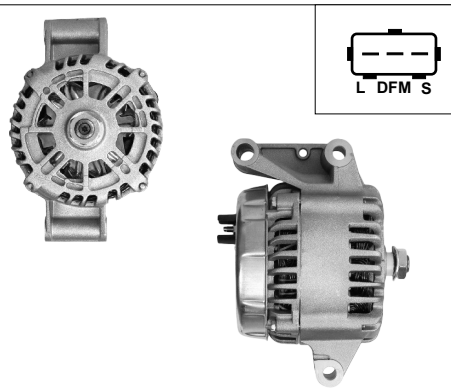

AS A9021

FORD
2C1T-10300-BA
YC1U-10300-EA
4362258
4461712

HC PARTS
CA1779IR
12V 110A
A:40 B:55
C:86

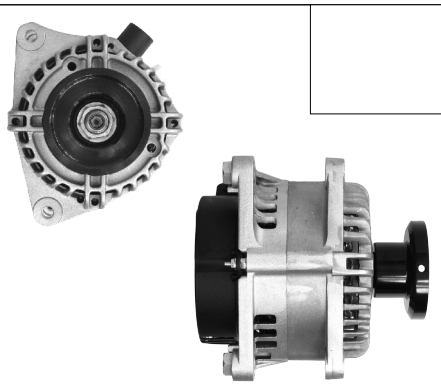

AS A9022

FORD
4M5T-10300-LA
4M5T-10300-LB
4M5T-10300-LC

HC PARTS
CA1989IR
12V 105A

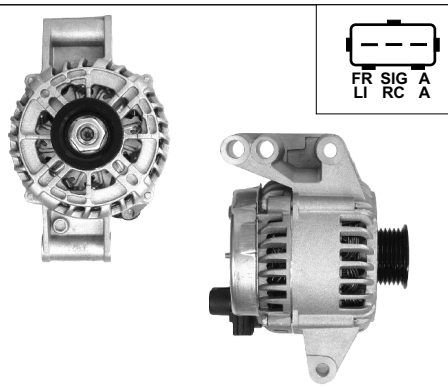

AS A9023

FORD
2S6T-10300-FA
3S5T-10300-AA

HC PARTS
CA1758IR
12V 90A
A:41 B:55
C:74

AS A9024

KOMATSU
600-821-3350
NIKKO
0-33000-2280

HC PARTS
JA977IR
24V 13A
A:63 B:16
C:68.5

AS A9025

KOMATSU
600-821-6150
NIKKO
0-33000-5840

HC PARTS
JA790IR
24V 25A
A:63 B:12.5
C:71

AS A9026

HC PARTS
JA789IR

AS A9027

KOMATSU
600-821-6130
NIKKO
600-821-6130

CARGO
110562
24V 25A
A:62.5 B:12
C:71

ALTERNATORS
OTHER

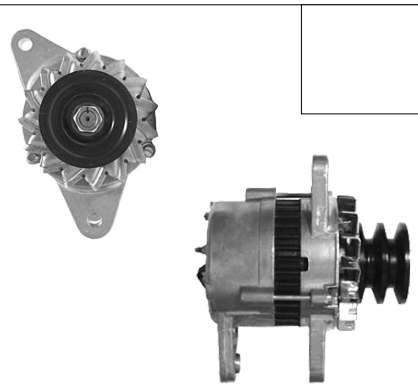

AS A9028

ISUZU
1-81200365-0

HC PARTS
JA1116IR
24V 25A
A:60 B:16
C:70.5

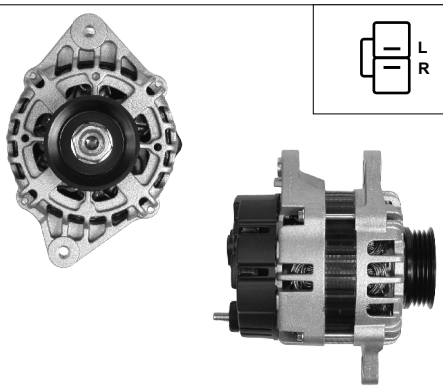

AS A9029

HYUNDAI / KIA
37300-02550
37300-02551

HC PARTS
JA1798IR
12V 70A
A:38.5 B:13
C:48

AS A9030R

MAGNETON
443113516836
9515836
R - rebuild

HC PARTS
CA1047IR
24V 35A
A:51.5 B:27
C:66

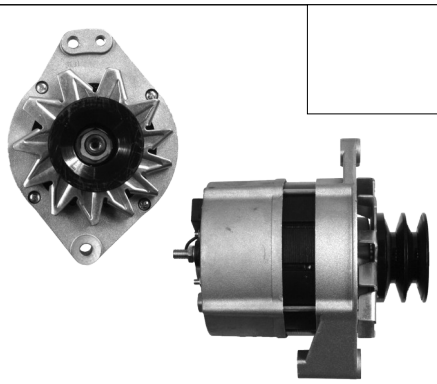

AS A9031

MAGNETON
9515122

CARGO
113552
12V 120A
A:77 B:50.8
C:

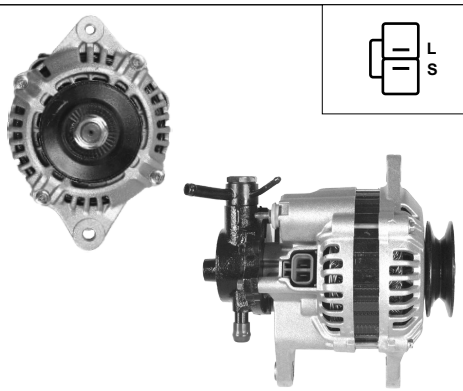

AS A9032

HYUNDAI / KIA
37300-12470
OK72A-18-300
OK72B-18-300

12V 75A
A:44 B:13
C:80

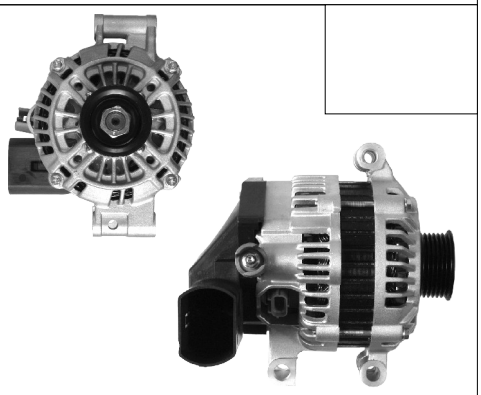

AS A9033

FORD
1S7T-10300-AA
1S7Z-10346-AA

12V 115A
A:40 B:22
C:74

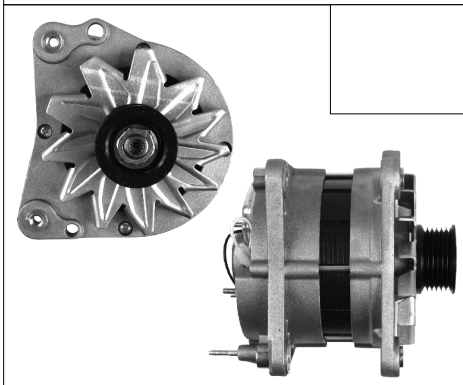

AS A9034

MAGNETON
9516591
443113516591

HC PARTS
CA1626IR
12V 90A
A:33 B:14
C:66

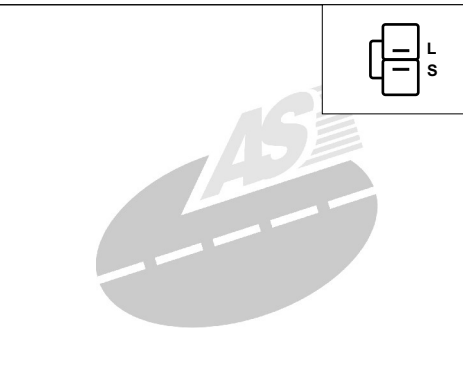

AS A9035

HYUNDAI / KIA
37300-27010
37300-27011
37300-27012
37300-27013

HC PARTS
JA1708IR
12V 120A
A:102 B:63
C:

AS A9036

DAEWOO
96652100
VALEO
2655866

HC PARTS
CA2023IR
12V 80A
A:38.5 B:15
C:63.5

A, B, C - page 5

Electric conections - page 4

ALTERNATOR BEARINGS

AS ABE9001

ORIGINAL **IKA** Size: 10 x 30 x 9 mm
6200-2RS1 **8 8156 0**

In offer also :

CARGO NTN6200-2RS/C3
140079 NSK6200-2RS/C3

AS ABE9002

ORIGINAL **IKA** Size: 12 x 32 x 10 mm
6201-2RS1 **8 8120 0**

In offer also :

CARGO NTN6201-2RS/C3
140081 NSK6201-2RS/C3

AS ABE9003

ORIGINAL **IKA** Size: 15 x 35 x 11 mm
6202-2RS1 **8 8157 0**

In offer also :

CARGO NTN6202-2RS/C3
140084 NSK6202-2RS/C3

AS ABE9004

ORIGINAL **IKA** Size: 17 x 40 x 12 mm
6203-2RS1 **8 8535 0**

In offer also :

CARGO NTN6203-2RS/C3
140087 NSK6203-2RS/C3

AS ABE9005

ORIGINAL **IKA** Size: 15 x 42 x 13 mm
6302-2RS1 **8 8236 0**

In offer also :

CARGO NTN6302-2RS/C3
140091 NSK6302-2RS/C3

AS ABE9006

ORIGINAL **IKA** Size: 17 x 47 x 14 mm
6303-2RS1 **8 8395 0**

In offer also :

CARGO NTN6303-2RS/C3
140093 NSK6303-2RS/C3

AS ABE9007

ORIGINAL **IKA** Size: 12 x 32 x 14 mm
62201-2RS1 **8 8427 0**

In offer also :

CARGO ABE9007(NSK)
140105

AS ABE9008

ORIGINAL **IKA** Size: 12 x 28 x 12 mm
63001-2RS1 **8 8551 0**

CARGO
140116

AS ABE9009

ORIGINAL **IKA** Size: 34 x 48 x 15 mm
F-91916 **8 8693 0**

CARGO
140198

ALTERNATOR BEARINGS

AS ABE9010

ORIGINAL **IKA** Size: 8 x 22 x 7 mm
608-2RS1 **8 8623 0**

In offer also :

CARGO NSK608-2RS/C3
140222

AS ABE9011

ORIGINAL **IKA** Size: 8 x 22 x 11 mm
B8-74D **8 8691 0**

CARGO
140231

AS ABE9012

ORIGINAL **IKA** Size: 8 x 23 x 11 mm
B8-79D **8 8690 0**

CARGO
140232

AS ABE9013

ORIGINAL **IKA** Size: 10 x 23 x 11 mm
B10-46D **8 8685 0**

CARGO
140233

AS ABE9014

ORIGINAL **IKA** Size: 8 x 23 x 14 mm
B8-85D **8 8689 0**

CARGO
140234

AS ABE9015

ORIGINAL Size: 10 x 27 x 11 mm
B10-50T12DDNCX

CARGO **IKA**
140235 **8 8687 0**

AS ABE9016

ORIGINAL **IKA** Size: 15 x 35 x 13 mm
90099-10140 **8 8545 0**

CARGO
140237

AS ABE9017

ORIGINAL **IKA** Size: 15 x 46 x 14 mm
949100-3360 **8 8540 0**

CARGO
140239

AS ABE9018

ORIGINAL **IKA** Size: 17 x 52 x 17 mm
B17-99DDW **8 8121 0**

In offer also :

CARGO NTN SC0352LLUA CLW
140263 NSK 140263

ALTERNATOR BEARINGS

AS ABE9019

ORIGINAL **IKA** Size: 10 x 26 x 8 mm
6000-2RS1 **8 8210 0**

In offer also :

CARGO NTN6000-2RS/C3
140271 NSK6000-2RS/C3

AS ABE9020

ORIGINAL **IKA** Size: 15 x 32 x 9 mm
6002-2RS1 **8 8144 0**

In offer also :

CARGO NTN6002-2RS/C3
140272 NSK6002-2RS/C3

AS ABE9021

ORIGINAL **IKA** Size: 17 x 35 x 10 mm
6003-2RS1 **8 8213 0**

In offer also :

CARGO NTN6003-2RS/C3
140273 NSK6003-2RS/C3

AS ABE9022

ORIGINAL **IKA** Size: 20 x 52 x 21 mm
62304-2RS1 **8 8137 0**

CARGO
140442

AS ABE9023

ORIGINAL **IKA** Size: 15 x 43 x 13 mm
90099-10152 **8 8538 0**

CARGO
140443

AS ABE9024

ORIGINAL **IKA** Size: 17 x 52 x 16 mm
90099-10192 **8 8539 0**

CARGO
142075

AS ABE9025

ORIGINAL **IKA** Size: 17 x 52 x 21 mm
1120905005 **8 8130 0**

CARGO
140569

AS ABE9026

ORIGINAL **IKA** Size: 15 x 52 x 16 mm
949100-3820 **8 8141 0**

CARGO
140462

AS ABE9027

ORIGINAL **IKA** Size: 8 x 23 x 14 mm
B8-23D **8 8254 0**

CARGO
140419

ALTERNATOR BEARINGS

AS ABE9028

ORIGINAL **IKA** Size: 15 x 47 x 14 mm
B15-86D **8 8536 0**

CARGO
140420

AS ABE9029

ORIGINAL **IKA** Size: 17 x 62 x 17 mm
102130 **8 8278 0**

CARGO
140401

AS ABE9030

ORIGINAL **IKA** Size: 15 x 35 x 13 mm
6202NCD **8 8135 0**

CARGO
140434

AS ABE9031

NIPPONDENSO Size: 15 x 38 x 19 mm
949100-3480

CARGO **IKA**
140461 **8 8541 0**

AS ABE9032

MITSUBISHI Size: 10 x 27 x 14 mm
S930P64570

CARGO **IKA**
140588 **8 8139 0**

AS ABE9033

CARGO **IKA** Size: 15 x 35 x 11 mm
140515 **8 8133 0**

AS ABE9034

ORIGINAL **IKA** Size: 12 x 28 x 8 mm
60012R **8 8143 0**

In offer also :

CARGO NTN6001-2RS/C3
140077 NSK6001-2RS/C3

AS ABE9035

CARGO **IKA** Size: 20 x 42 x 12 mm
140223 **8 8214 0**

AS ABE9036

CARGO **IKA** Size: 15 x 32 x 11 mm
140441 **8 8546 0**

ALTERNATOR BEARINGS

AS ABE9037

HITACHI **IKA** Size: 15 x 35 x 11 mm
6202LLBC3 **8 8666 0**

CARGO
141012

AS ABE9038

ORIGINAL **IKA** Size: 25 x 52 x 15 mm
6205-2RS1 **8 8224 0**

In offer also :

CARGO NTN6205-2RS/C3
140219 ABE9038(NSK)

AS ABE9039

CARGO **IKA** Size: 17 x 35 x 10 mm
141071 **8 8333 0**

AS ABE9040(NSK)

ORIGINAL **IKA** Size: 20 x 52 x 15 mm
63042RSRC3 **8 8142 0**

CARGO
140175
140278

AS ABE9041(NSK)

ORIGINAL **IKA** Size: 17 x 62 x 17.5 mm
1120900008 **8 8132 0**
1120900010

CARGO
140176

AS ABE9042(NSK)

ORIGINAL Size: 9 x 26 x 8 mm
6292RS1C3

CARGO
140893

AS ABE9043

ORIGINAL Size: 29 x 36 x 13 mm
F-123459.2
188068

CARGO
141225

AS ABE9044

ORIGINAL **IKA** Size: 17 x 62 x 20 mm
1120905097 **8 8389 0**
B17-127DG

CARGO
140957

AS ABE9045

CARGO **IKA** Size: 12 x 16 x 10 mm
140242 **8 4079 0**

ALTERNATOR BEARING CAPS

AS ABEC0001

ORIGINAL	CARGO
F00M146900	139929
F00M146901	

O.D.	37.75
I.D.	35.00
H.	50.00

AS ABEC0002

ORIGINAL	CARGO
1120591076	135237
1120591103	

O.D.	43.00
I.D.	40.00
H.	16.60

AS ABEC0003

ORIGINAL	CARGO
1120591060	136235

O.D.	35.00
I.D.	32.00
H.	18.80

AS ABEC0004

ORIGINAL	CARGO
1120591511	135407
1120591509	
1120591116	
1120591102	

O.D.	42.90
I.D.	
H.	47.00

AS ABEC0005

ORIGINAL	CARGO
1120591075	132769

O.D.	35.00
I.D.	34.00
H.	42.00

AS ABEC0006

ORIGINAL	CARGO
1120591082	131828

O.D.	35.00
I.D.	32.00
H.	15.00

AS ABEC0007

ORIGINAL	CARGO
F00M146902	236530

O.D.	44.00 / 37.90 / 21.40
I.D.	34.90 / 20.50
H.	29.75

AS ABEC0008

O.D.	37.10
I.D.	34.50
H.	17.00

for 0121615002

ALTERNATOR BEARING CAPS

AS ABEC3001

CARGO		
135508	O.D.	37.30
	I.D.	35.00
	H.	19.50

AS ABEC3002

ORIGINAL	CARGO		
590650	133648	O.D.	32.50
		I.D.	30.00
		H.	11.50

AS ABEC3003

ORIGINAL	CARGO		
590629	131826	O.D.	34.00
105299		I.D.	32.00
		H.	14.00

AS ABEC3004

for 2542523

AS ABEC3005

for:	CARGO		
A13VI132	135171	O.D.	34.30
		I.D.	32.00
		H.	16.20

AS ABEC4001

CARGO		
231827	O.D.	36.80 / 41.30
	I.D.	35.00 / 17.80
	H.	18.10

AS ABEC4002

CARGO		
139866	O.D.	37.00
	I.D.	35.00
	H.	18.30

AS ABEC9001

CARGO		
234024	O.D.	35.00
	I.D.	36.90
	H.	

AS ABEC9002

for JA1798IR

ALTERNATOR BRACKETS
BOSCH/VALEO

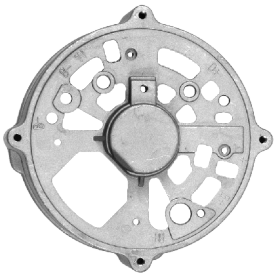

AS ABR0001

ORIGINAL SRE bracket
1125885019

CARGO
135556

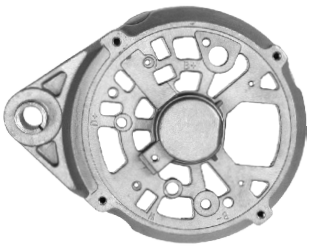

AS ABR0002

ORIGINAL SRE bracket
1125885230

CARGO
136440

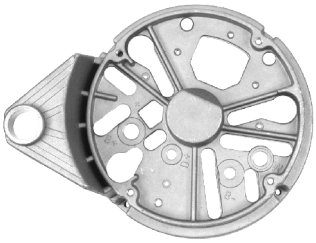

AS ABR0003

ORIGINAL SRE bracket
1125887013

CARGO
136006

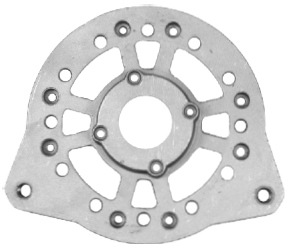

AS ABR0004

ORIGINAL DE bracket
1125827013

CARGO
136002

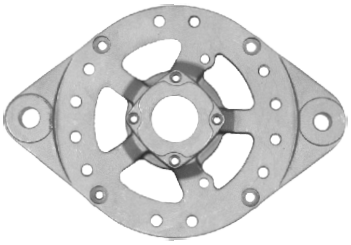

AS ABR0005

ORIGINAL DE bracket
1125825358

CARGO
230172

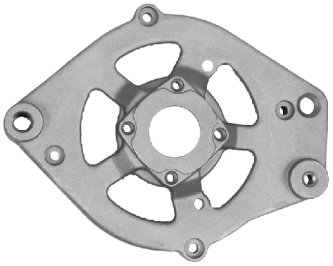

AS ABR0006

ORIGINAL DE bracket
1125825098

CARGO
135908

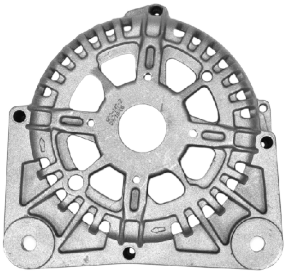

AS ABR3001

CARGO
235568

ALTERNATOR BRACKETS
MAGNETI MARELLI/LUCAS

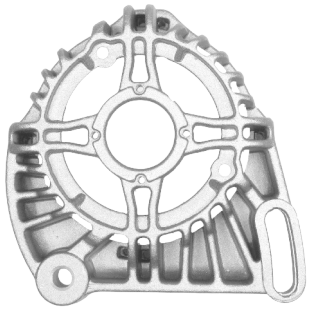

AS ABR4001

CARGO DE bracket
230223

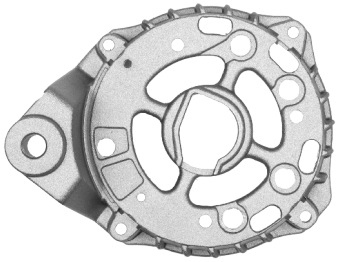

AS ABR4002

ORIGINAL SRE bracket
83608471

CARGO
138473

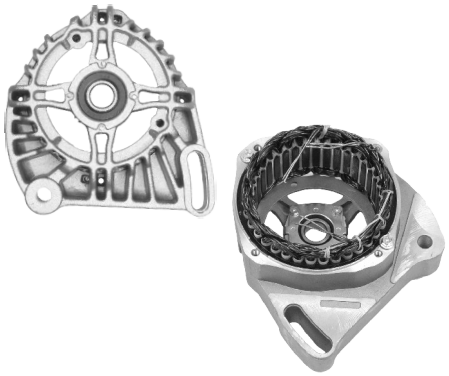

AS ABR4003

ORIGINAL
83608351

CARGO
138171

Set:
- stator CG139956
- DE bracket CG230223
- bearing CG140087

AS ABR4004

ORIGINAL
83611391

CARGO
138506

Set:
- stator CG139956
- DE bracket CG234203
- bearing CG140093

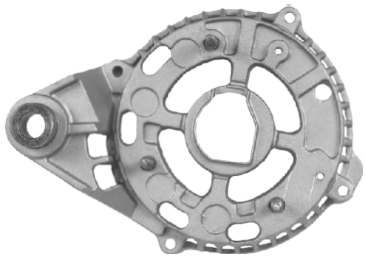

AS ABR4005

ORIGINAL SRE bracket
83615991
83623631

CARGO
138951

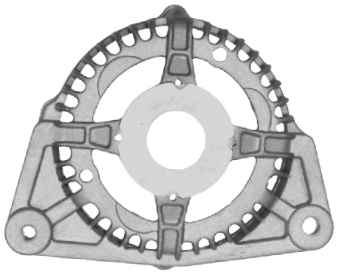

AS ABR4006

DE bracket

CARGO
230225

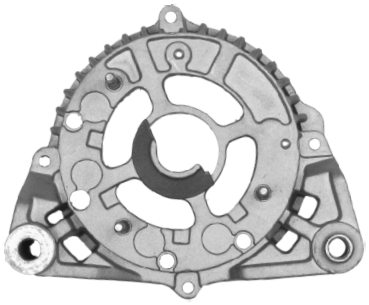

AS ABR4007

CARGO SRE bracket
231241

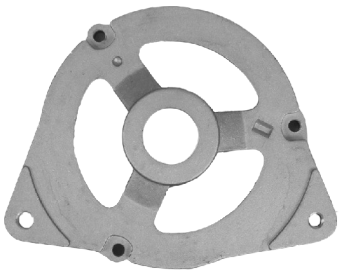

AS ABR4008

ORIGINAL DE bracket
54206516

CARGO
134036

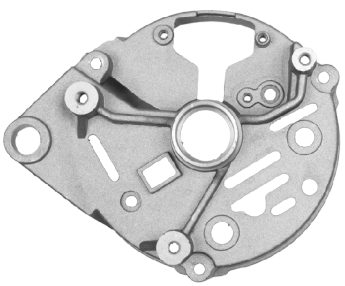

AS ABR4009

ORIGINAL SRE bracket
54206343

CARGO
134667

ALTERNATOR BRACKETS
MAGNETI MARELLI/LUCAS

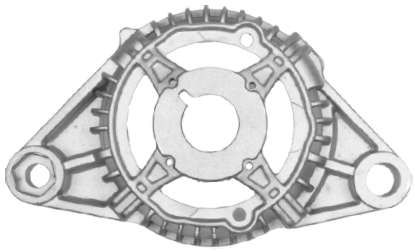

AS ABR4010

CARGO DE bracket
234203

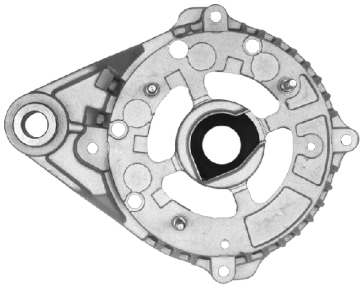

AS ABR4011

ORIGINAL Set:
83608491
- SRE bracket CG231992
- ABEC4001, CG231827

CARGO
231319

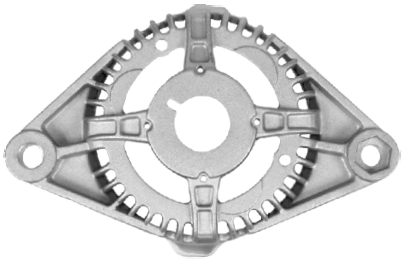

AS ABR4012

CARGO DE bracket
231994

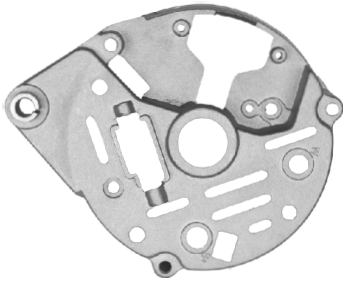

AS ABR4015

ORIGINAL SRE bracket
54205963

CARGO
134037

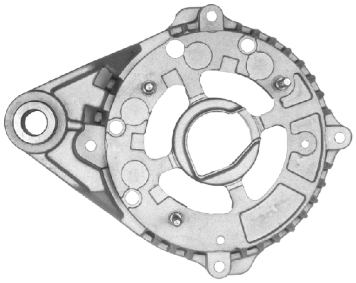

AS ABR4016

ORIGINAL SRE bracket
83616611

CARGO
231992

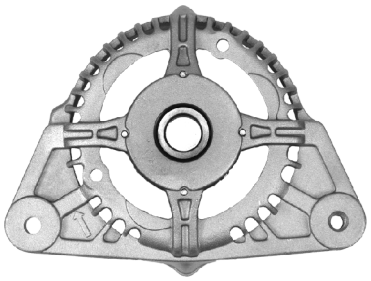

AS ABR4017

DE bracket

CARGO
230224 **repl. CA1083IR**

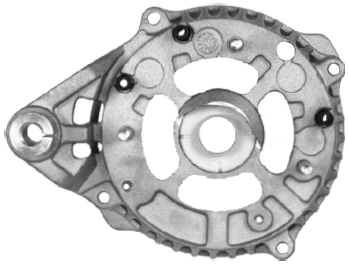

AS ABR4018

SRE bracket

CARGO
231242 **repl. CA1083IR**

AS ABR4019

ORIGINAL Set:
83608541
- DE bracket
- stator CG139956
- bearing CG140093

CARGO
138456 **repl. CA1084IR**

AS ABR4020

ORIGINAL Set:
54209326
- DE bracket
- stator CG137224

CARGO
230143 **repl. CA1199IR**

ALTERNATOR BRACKETS
MAGNETI MARELLI/LUCAS

AS ABR4021

ORIGINAL
83609170

Set:
- DE bracket CG231994
- Stator CG233598

CARGO
230812

AS ABR4022

ORIGINAL
54220400

Set:
- DE bracket CG230226
- Stator CG233598

CARGO
231036

AS ABR4023

ORIGINAL
83613781

Set:
- DE bracket CG230224
- Stator CG139956

CARGO
231038

AS ABR4024

ORIGINAL
83615621

Set:
- DE bracket CG230227
- Stator

CARGO
231039

AS ABR4025

ORIGINAL
83624941

Set:
- DE bracket CG230225
- Stator CG233344

CARGO
234898

AS ABR4026

ORIGINAL
83627521

Set:
- DE bracket
- Stator

repl. CA1223IR

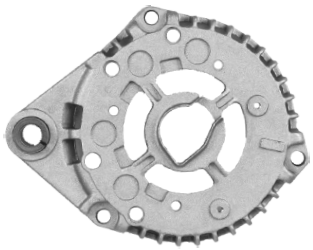

AS ABR4027

ORIGINAL
85562971

SRE bracket

CARGO
234730

repl. CA1223IR

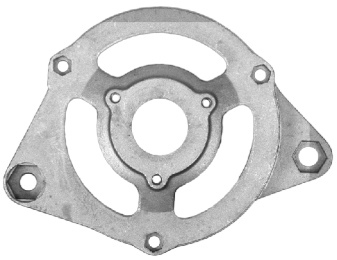

AS ABR4028

ORIGINAL
83600721

DE bracket

CARGO
134415

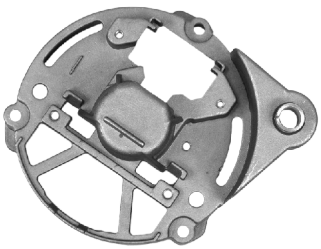

AS ABR4029

ORIGINAL
83603211

SRE bracket

CARGO
134422

ALTERNATOR BRACKETS
MAGNETI MARELLI/LUCAS

AS ABR4030

ORIGINAL DE bracket
83600101

CARGO
134417

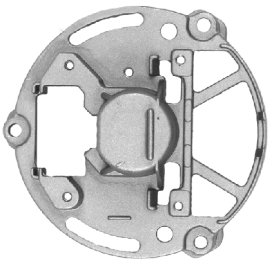

AS ABR4031

ORIGINAL SRE bracket
83604761

CARGO
235119

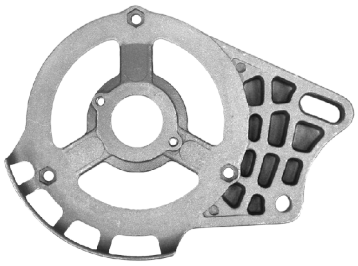

AS ABR4032

ORIGINAL DE bracket
83607021

CARGO
138799

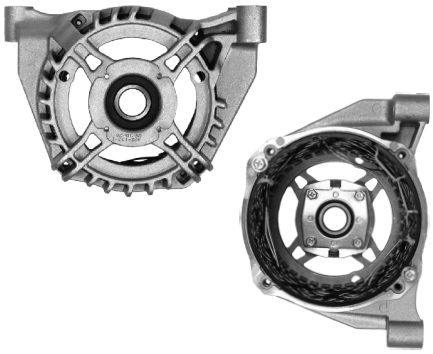

AS ABR4033

ORIGINAL
83625051

Set:
- DE bracket
- Stator

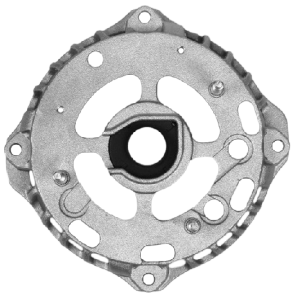

AS ABR4034

ORIGINAL SRE bracket
83625041

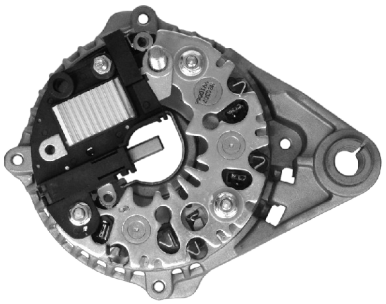

AS ABR4035

ORIGINAL
83621391

Set:
- SRE bracket
- Regulator
- Rectifier

CARGO
138564

AS ABR4036

DE bracket

CARGO
235021

AS ABR4037

ORIGINAL
83618001

Set:
- DE bracket
- Stator

CARGO
231029 **for CA1558IR**

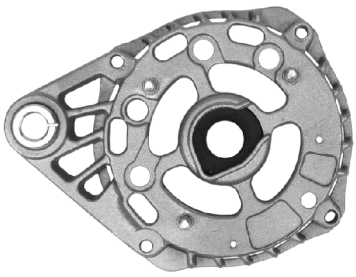

AS ABR4038

SRE bracket

CARGO
235137

ALTERNATOR BRACKETS
MARELLI/DENSO/OTHER

AS ABR4039

FOR : DE bracket
AS A4058
CA1766IR

AS ABR4040

FOR: Set:
AS A4048 - DE bracket
CA1890IR - Stator

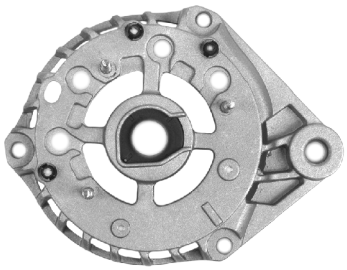

AS ABR4041

FOR: SRE bracket
AS A4048
CA1890IR

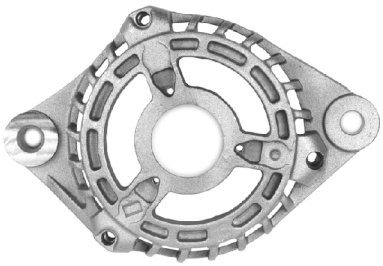

AS ABR4042

FOR: DE bracket
AS A4048
CA1890IR

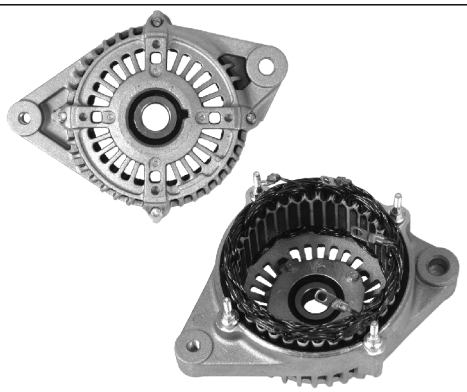

AS ABR6001

FOR: Set:
AS A6001 - DE bracket
JA1517IR - Stator

CARGO
235600

AS ABR6002

FOR: Set:
AS A6013 - DE bracket
JA1800IR - Stator

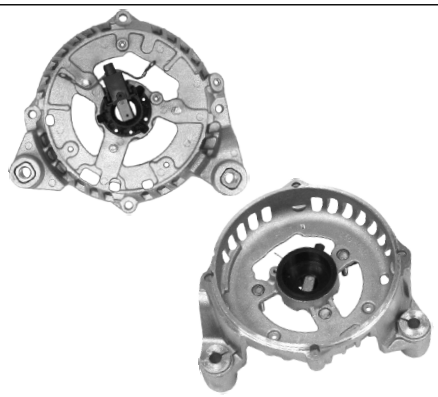

AS ABR9001

FOR : Set:
AS A9012 - SRE bracket
CA1857IR - Brush Holder

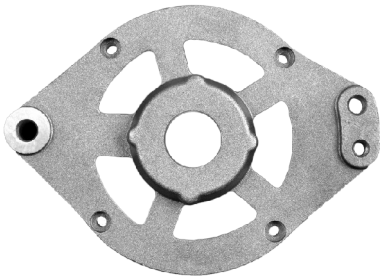

AS ABR9002

MAGNETON DE bracket
0137890

CARGO
234601

ALTERNATOR PLASTIC COVER
BOSCH

AS APC0001

ORIGINAL	CARGO
1125500635	136705
1125500583	
1125500518	

AS APC0002

ORIGINAL	CARGO
F00M126603	139656
F00M146605	
F00M146639	
F00M146743	
F00M146793	

AS APC0003

ORIGINAL	CARGO
1125500623	135240
1125500190	
1125500117	
1125500116	
1125500086	

AS APC0004

ORIGINAL	CARGO
1125500603	135241
1125500128	
1125500108	

AS APC0005

ORIGINAL	CARGO
1125500647	136395
1125500519	

AS APC0006

ORIGINAL	CARGO
F00M146652	234549

AS APC0007

ORIGINAL	CARGO
F00M146675	233588

AS APC0008

ORIGINAL	CARGO
F00M146692	234150

AS APC0009

ORIGINAL	CARGO
F00M196004	235254
F00M146712	
F00M146071	

ALTERNATOR PLASTIC COVER
DELCO

AS APC1001

ORIGINAL	CARGO
10475017	136596

ALTERNATOR PLASTIC COVER
VALEO

AS APC3001

ORIGINAL	CARGO
592946	134976
2519836	

AS APC3002

ORIGINAL	CARGO
592944	135436

AS APC3003

ORIGINAL	CARGO
593237	136662
592941	

AS APC3004

ORIGINAL	CARGO
593238	137945

AS APC3005

ORIGINAL	CARGO
593289	139453

AS APC3006

ORIGINAL	CARGO
593315	139462

AS APC3007

ORIGINAL	CARGO
593374	230676
593335	

AS APC3008

ORIGINAL	CARGO
593376	231094

AS APC3009

ORIGINAL	CARGO
593834	231097
593417	

ALTERNATOR PLASTIC COVER
VALEO

AS APC3010

ORIGINAL	CARGO
593448	233654

AS APC3011

ORIGINAL	CARGO
593386	233655

AS APC3012

ORIGINAL	CARGO
593528	234822

AS APC3013

ORIGINAL	CARGO
593805 593774	235163

AS APC3014

ORIGINAL	CARGO
593672	236473

AS APC3015

CARGO
237003

ALTERNATOR PLASTIC COVER
MAGNETI MARELLI/LUCAS

AS APC4001

ORIGINAL	CARGO
83608400	136430
83614890	231812

AS APC4002

ORIGINAL	CARGO
83608581	230677

AS APC4003

ORIGINAL	CARGO
83615601	231700

AS APC4004

ORIGINAL	CARGO
83611721	132315
83606891	
83606791	
83603821	
83603191	

AS APC4005

ORIGINAL	CARGO
85560701	133201
85560011	
83617721	

AS APC4006

ORIGINAL	CARGO
54209061	138852
54202469	

AS APC4007

ORIGINAL	CARGO
85562721	138891
85562671	
83613151	
83612690	

AS APC4008

CARGO
139531

AS APC4009

ORIGINAL	CARGO
83618840	230372

ALTERNATOR PLASTIC COVER
MAGNETI/LUCAS/OTHER

AS APC4010

ORIGINAL **CARGO**
83615541 **230948**

AS APC4011

CARGO
231430

AS APC4012

CARGO
231698

AS APC4013

CARGO
234109

AS APC4014

CARGO
234327

AS APC4015

CARGO
237963

AS APC9001

for CA1638IR

BRUSH HOLDERS
DELCO

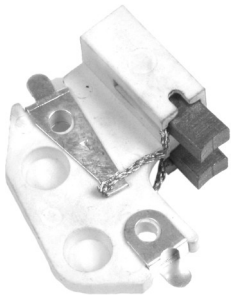

AS ABH1001

ORIGINAL 12 V
DR701

CARGO
130712

AS ABH1002

ORIGINAL 12 V
7982589

CARGO
130973

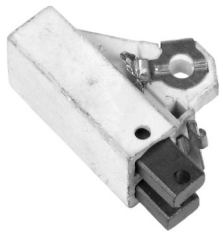

AS ABH1003

ORIGINAL 12 V
10472881

CARGO
131915

AS ABH1004

ORIGINAL 12 V
10475011

CARGO
136599

AS ABH1005

ORIGINAL 12 V
10475746

CARGO
137053

AS ABH1006

CARGO 12 V
231346

AS ABH1007

12 V

CARGO
233449

BRUSH HOLDERS
HITACHI/MAGNETI

AS ABH2001

ORIGINAL 12 V
L180G-1330

CARGO
138614

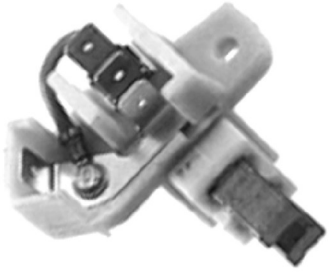

AS ABH4001

ORIGINAL 12 V
74876641

CARGO
130704

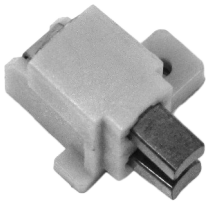

AS ABH4002

ORIGINAL 12 V / 24 V
74990431

CARGO
130703

BRUSH HOLDERS
NIPPONDENSO/OTHER

AS ABH6001

ORIGINAL 12 V
021620-2010

CARGO
132084

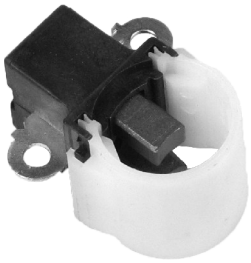

AS ABH6002

ORIGINAL 12 V
021620-2530

CARGO
133673

AS ABH6003

ORIGINAL 12 V
021630-0220
021630-0530
CARGO
132558

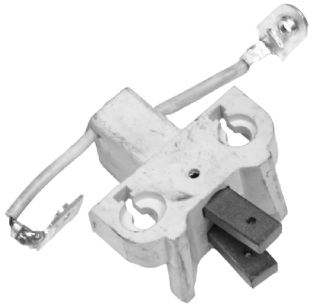

AS ABH9001

ORIGINAL 12 V
F1DZ10347A

CARGO
136216

AS ABH9002

CARGO 12 V
238956

ALTERNATOR BRUSH SETS

AS BX182

ORIGINAL 1127014009

Size: 5 x 10 x 17 mm
12 V

AS BX185

ORIGINAL 1127014001

Size: 5 x 8 x 15 mm
12 V

AS BX201

ORIGINAL 1127014016

Size: 5 x 8 x 23 mm
12 V

AS BX202

ORIGINAL 1127014017

Size: 5 x 8 x 19 mm
24 V

AS BX204

ORIGINAL 1127014018

Size: 5 x 8 x 19 mm
12 V

AS BX213

ORIGINAL 1127014028

Size: 4 x 6 x 17.5 mm
12 V

AS RX103F

ORIGINAL DR702

Size: 5 x 8 x 13.2 mm
12 V

AS RX103

ORIGINAL 7982543

Size: 5 x 8 x 13.2 mm
12 V

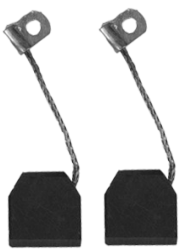

AS RX58

ORIGINAL 1906921

Size: 22.2 x 6.4 x 23.8 mm
12 V

ALTERNATOR BRUSH SETS

AS AB2001

CARGO	**140380**	**ORIGINAL**
IKA	**JAXX 32**	**2170-1325**
Size:	5 x 7 x 21 mm	
	12 V	

AS AB2002

CARGO	**140575**	**ORIGINAL**
IKA	**JAAX 37**	**L1110-1325**
Size:	5 x 8 x 26 mm	
	12 V	

AS AB2003

CARGO	**140744**	**ORIGINAL**
IKA	**JAAX 19**	**L160-1331**
Size:	6 x 7 x 18 mm	
	12 V	

AS AB2004

CARGO	**140818**	**ORIGINAL**
IKA	**JAAX 39**	**L170-1325**
Size:	5 x 8 x 19 mm	
	12 V	

AS AB2005

CARGO	**140342**	**ORIGINAL**
IKA	**JAAX 20**	**L120-13202**
Size:	5 x 7 x 17 mm	

AS AB2006

CARGO	**140344**	**ORIGINAL**
IKA	**JAAX12**	**L119N-1361**
Size:	6 x 8 x 19 mm	
	12 V	

AS PX58

ORIGINAL **300665**

Size: 5 x 10 x 17 mm
12/24 V

AS PX60

ORIGINAL **092950**

Size: 4.6 x 6.35 x 15.4 mm
12 V

AS SVX7

Size: 4.5 x 6.3 x 14.5 mm
12 V

ALTERNATOR BRUSH SETS

AS AB4001

CARGO 140914
IKA JX 43
Size: 4 x 7 x 22 mm
12/24 V

AS JX42

ORIGINAL 79705021

Size: 7.2 x 4.2 x 17.7 mm
12 V

AS LAX82

CARGO 140613

Size: 4 x 6.9 x 21 mm
12 V

AS AB5001

CARGO 140350 **ORIGINAL**
IKA JAAX 16 **A648C00570**
Size: 7 x 6 x 14 mm
12 V

AS AB5002

CARGO 140351 **ORIGINAL**
IKA JAAX 25 **A648C01570**
Size: 7 x 6 x 17 mm
12 V

AS AB5003

CARGO 140352 **ORIGINAL**
IKA JAAX 24 **A648D01670**
Size: 7 x 6 x 18 mm
12 V

AS AB5005

CARGO 140354 **ORIGINAL**
IKA JAAX 31 **A648D01970**
Size: 7 x 6 x 23 mm
12 V

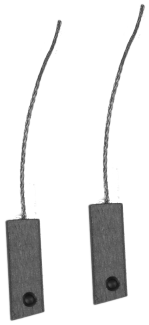

AS AB5006

CARGO 140576 **ORIGINAL**
IKA JAAX 36 **A648D03070**
Size: 5 x 8 x 23 mm
12 V

ALTERNATOR BRUSH SETS

AS AB5007

CARGO	**140577**	**ORIGINAL**
IKA	**JAAX 34**	**A648C02970**
Size:	5 x 8 x 18 mm	**MD611566**
	12 V	

AS AB5008

CARGO	**140351**	**ORIGINAL**
		A648C01570
Size:	7 x 6 x 17 mm	
	12 V	

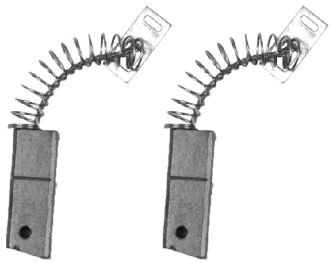

AS AB5009

CARGO	**140817**	**ORIGINAL**
IKA	**JAAX36ST**	**A647X50170**
Size:	8 x 5 x 23 mm	
	12 V/24 V	

AS AB6001

CARGO	**140365**	**ORIGINAL**
IKA	**JAAX 9**	**021660-0130**
Size:	5 x 8 x 17.6 mm	
	12 V	

AS AB6002

CARGO	**140368**	**ORIGINAL**
IKA	**JAAX 28**	**021660-0330**
Size:	5 x 8 x 20.3 mm	
	12 V	

AS AB6003

CARGO	**140369**	**ORIGINAL**
IKA	**JAAX 33**	**021660-0311**
Size:	5 x 8 x 25.8 mm	
	12 V	

AS AB6004

CARGO	**140370**	**ORIGINAL**
IKA	**JAAX 38**	**021660-0370**
Size:	5 x 8 x 19.5 mm	
	12 V	

AS AB6005

CARGO	**140371**	**ORIGINAL**
IKA	**JAAX 35**	**021660-0390**
Size:	5 x 7 x 14.3 mm	
	12 V	

ALTERNATOR FREE WHEEL PULLEYS

AS AFP0001

ORIGINAL	CARGO		
1126601557	138282	O.D. Ø	56.8 mm
F-226556.5		Bore:	17 mm
		Width:	36.2 mm
			5 grooves

AS AFP0002

ORIGINAL	CARGO		
1126601572	138807	O.D. Ø	55.5 mm
F-225643.5		Bore:	17 mm
		Width:	32.9 mm
			6 grooves

AS AFP0003

ORIGINAL	CARGO		
6033GD5036	230305	O.D. Ø	55.7 mm
1126601568		Bore:	17 mm
F-228215		Width:	37.3 mm
F-225644.5			6 grooves

AS AFP0004

ORIGINAL	CARGO		
1126601559	138203	O.D. Ø	56 mm
F-226804.5		Bore:	17 mm
		Width:	40.7 mm
			6 grooves

AS AFP0005

ORIGINAL	CARGO		
1126601565	139281	O.D. Ø	49.5 mm
F-225355.5		Bore:	17 mm
		Width:	38.7 mm
			6 grooves

AS AFP0006

ORIGINAL	CARGO		
1126601566	230083	O.D. Ø	56.1 mm
F-225653.5		Bore:	17 mm
		Width:	34.3 mm
			5 grooves

AS AFP0007

ORIGINAL	CARGO		
F00M991061	230296	O.D. Ø	56.7 mm
F-230401		Bore:	17 mm
		Width:	33.9 mm
			6 grooves

AS AFP0008

ORIGINAL	CARGO		
1126601597	230292	O.D. Ø	49.7 mm
F-228824.1		Bore:	17 mm
		Width:	38.8 mm
			6 grooves

AS AFP0009

ORIGINAL	CARGO		
F00M991045	230302	O.D. Ø	55.8 mm
F-225653.6		Bore:	17 mm
		Width:	33.1 mm
			5 grooves

ALTERNATOR FREE WHEEL PULLEYS

AS AFP0010

ORIGINAL	CARGO		
F00M991002	230293	O.D. Ø	56.1 mm
F-227628.5		Bore:	17 mm
		Width:	41.6 mm
			6 grooves

In offer also : AFP0010(BOSCH)

AS AFP0011

ORIGINAL	CARGO		
F00M991042	230304	O.D. Ø	55.8 mm
F-226322.11		Bore:	17 mm
		Width:	32.7 mm
			5 grooves

AS AFP0013

ORIGINAL	CARGO		
F00M991078	233657	O.D. Ø	59 mm
		Bore:	17 mm
		Width:	35.1 mm
			7 grooves

AS AFP0014

ORIGINAL	CARGO		
F00M991039	230309	O.D. Ø	61 mm
		Bore:	17 mm
		Width:	36.9 mm
			5 grooves

AS AFP0015

ORIGINAL	CARGO		
F229363.6	230307	O.D. Ø	50 mm
		Bore:	17 mm
		Width:	35.1 mm
			6 grooves

AS AFP0016

ORIGINAL	CARGO		
F00M991105	230315	O.D. Ø	52.9 mm
		Bore:	17 mm
		Width:	33 mm
			6 grooves

AS AFP0017

ORIGINAL	CARGO		
1126601593	230306	O.D. Ø	55.9 mm
F-228618.5		Bore:	17 mm
		Width:	35 mm
			6 grooves

AS AFP0018

ORIGINAL	CARGO		
F00M991044	230312	O.D. Ø	56 mm
F-230846.1		Bore:	17 mm
		Width:	35 mm
			6 grooves

AS AFP0019

ORIGINAL	CARGO		
1126601567	237600	O.D. Ø	57.7 mm
		Bore:	17 mm
		Width:	34.5 mm
			5 grooves

ALTERNATOR FREE WHEEL PULLEYS

AS AFP0020

ORIGINAL	CARGO		
F00M991172	234056	O.D. Ø	54.4 mm
		Bore:	17 mm
		Width:	31.6 mm
			6 grooves

AS AFP0021

ORIGINAL	CARGO		
F00M991125	232624	O.D. Ø	50 mm
		Bore:	17 mm
		Width:	39 mm
			6 grooves

AS AFP0022

ORIGINAL	CARGO		
F00M061016	230519	O.D. Ø	55.8 mm
		Bore:	17 mm
		Width:	37.6 mm
			6 grooves

AS AFP0023

ORIGINAL	CARGO		
F00M991108	234795	O.D. Ø	55 mm
		Bore:	17 mm
		Width:	35 mm
			6 grooves

AS AFP0024

ORIGINAL	CARGO		
F00M991090	235331	O.D. Ø	56.1 mm
		Bore:	17 mm
		Width:	36.4 mm
			6 grooves

AS AFP0025

ORIGINAL	CARGO		
F00M991300	236531	O.D. Ø	62 mm
		Bore:	17 mm
		Width:	34.6 mm
			18 grooves

AS AFP0026

ORIGINAL	CARGO		
F00M991076	236762	O.D. Ø	54 mm
F00M991128		Bore:	17 mm
		Width:	40 mm
			5 grooves

AS AFP0027

ORIGINAL	CARGO		
F00M349877	330895	O.D. Ø	57.7 mm
F00M391107		Bore:	17 mm
F00M391118		Width:	36.5 mm
F00M391120			6 grooves

AS AFP0028

ORIGINAL	CARGO		
F00M147746	234169	O.D. Ø	49.15 mm
F00M147914		Bore:	17 mm
F00M349820		Width:	33.6 mm
F00M349898			6 grooves

ALTERNATOR FREE WHEEL PULLEYS

AS AFP0029

ORIGINAL	CARGO		
F00M147764	234127	O.D. Ø	54.3 mm
F00M147766		Bore:	17 mm
F00M147907		Width:	33.5 mm
F00M349814			6 grooves

AS AFP0030

ORIGINAL	CARGO		
1126601580	235478	O.D. Ø	55 mm
F00M991393		Bore:	17 mm
		Width:	35 mm
			6 grooves

AS AFP0031

ORIGINAL	CARGO		
F00M391160	234793	O.D. Ø	55.65 mm
F00M991138		Bore:	17 mm
F00M991302		Width:	44.5 mm
			7 grooves

AS AFP0032

ORIGINAL	CARGO		
1127011861	230520	O.D. Ø	67.9 mm
F00M061005		Bore:	17 mm
F00M147736		Width:	40.1 mm
F00M991095			6 grooves

AS AFP0033

ORIGINAL	CARGO		
F00M147876	235695	O.D. Ø	49.4 mm
F00M991247		Bore:	17 mm
F00M991287		Width:	39.9 mm
			6 grooves

AS AFP0034

ORIGINAL	CARGO		
F00M991252	235439	O.D. Ø	57.7 mm
		Bore:	17 mm
		Width:	36 mm
			8 grooves

AS AFP0035

ORIGINAL	CARGO		
F00M147738	235480	O.D. Ø	54 mm
F00M991133		Bore:	17 mm
F00M991189		Width:	40 mm
			6 grooves

AS AFP0036

ORIGINAL	CARGO		
F00M349829	235721	O.D. Ø	50.3 mm
F00M391105		Bore:	17 mm
F00M391145		Width:	39.7 mm
F00M991391			8 grooves

AS AFP0037

ORIGINAL			
F00M991186		O.D. Ø	59 mm
		Bore:	17 mm
		Width:	34 mm
			5 grooves

ALTERNATOR FREE WHEEL PULLEYS

AS AFP0038

ORIGINAL	CARGO		
F-233834.01	235716	O.D. Ø	57.5 mm
F-233834.02		Bore:	17 mm
F-233834.03		Width:	45.35 mm
F-551359			8 grooves

AS AFP0039

ORIGINAL	CARGO		
F-230283.01	235717	O.D. Ø	71.4 mm
F-230283.02		Bore:	17 mm
F-230283.03		Width:	43.8 mm
F-230283.1			8 grooves

AS AFP0040

ORIGINAL	CARGO		
1126601588	230303	O.D. Ø	70 mm
078903119G		Bore:	17 mm
F-226321.04		Width:	41 mm
535000610			6 grooves

AS AFP0041

ORIGINAL	CARGO		
F00MA47704	330921	O.D. Ø	62 mm
F00M147854		Bore:	17 mm
F00M991281		Width:	43 mm
F00M992725			6 grooves

AS AFP0042

ORIGINAL	CARGO		
01221AA6K0	230311	O.D. Ø	53.5 mm
01221AA8F0		Bore:	17 mm
F00M991395		Width:	40 mm
F-230825.02			7 grooves

AS AFP0043

ORIGINAL	CARGO		
1126601102	231092	O.D. Ø	72 mm
F-230283		Bore:	17 mm
F-238215.01		Width:	36.8 mm
9061550315			8 grooves

AS AFP0044

ORIGINAL	CARGO		
0124A00238	233530	O.D. Ø	53 mm
F00M147747		Bore:	17 mm
F00M147913		Width:	33.5 mm
F-236566			6 grooves

AS AFP0045

ORIGINAL	CARGO		
F00M349827	234796	O.D. Ø	55 mm
F00M991181		Bore:	17 mm
F00M991255		Width:	36 mm
F-235968			6 grooves

AS AFP0046

ORIGINAL	CARGO		
F00M991186	235504	O.D. Ø	62 mm
F00M391105		Bore:	17 mm
F00M391145		Width:	37 mm
F00M991391			8 grooves

ALTERNATOR FREE WHEEL PULLEYS

AS AFP0047

ORIGINAL	CARGO		
F00M147800	235506	O.D. Ø	55 mm
F00M991204		Bore:	17 mm
F00M991283		Width:	34 mm
F-240139			6 grooves

AS AFP0048

ORIGINAL	CARGO		
F00M147859	235507	O.D. Ø	61 mm
F00M991218		Bore:	17 mm
F-240138		Width:	37 mm
F-551357			5 grooves

AS AFP0049

ORIGINAL	CARGO		
F00M349828	235508	O.D. Ø	55 mm
F00M391104		Bore:	17 mm
F00M391144		Width:	42 mm
F-239356			8 grooves

AS AFP0050

ORIGINAL	CARGO		
F00M349826	235697	O.D. Ø	54 mm
F00M391110		Bore:	17 mm
F00M391146		Width:	41 mm
F-236127			7 grooves

AS AFP0051

ORIGINAL	CARGO		
F00M349878	235720	O.D. Ø	58.7 mm
F00M391108		Bore:	17 mm
F00M391121		Width:	37.5 mm
F00M391121			7 grooves

AS AFP0052

ORIGINAL	CARGO		
F00M349813	235732	O.D. Ø	58 mm
F00M391113		Bore:	17 mm
F00M391139		Width:	40.5 mm
F-553392			5 grooves

AS AFP0053

ORIGINAL	CARGO		
F00M991229	235733	O.D. Ø	60 mm
F-550213.06		Bore:	17 mm
535012310		Width:	39 mm
			6 grooves

AS AFP0054

ORIGINAL	CARGO		
F00M991139	237280	O.D. Ø	61 mm
F-552861		Bore:	17 mm
535007130		Width:	37 mm
			5 grooves

AS AFP0055

ORIGINAL	CARGO		
F00M147767	237355	O.D. Ø	53 mm
F00M147957		Bore:	17 mm
F00M991178		Width:	33 mm
F-238120			6 grooves

ALTERNATOR FREE WHEEL PULLEYS

AS AFP0056

ORIGINAL	CARGO		
F00M147806	237817	O.D. Ø	58 mm
F00M147976		Bore:	17 mm
F00M991217		Width:	43 mm
F-550213.01			5 grooves

AS AFP0057

ORIGINAL	CARGO		
F00M147821	238733	O.D. Ø	60 mm
F00M147956		Bore:	17 mm
F00M991219		Width:	42 mm
F-550213.02			6 grooves

AS AFP0058

ORIGINAL	CARGO		
F00M147807	238734	O.D. Ø	53 mm
F00M147831		Bore:	17 mm
F00M991216		Width:	36.5 mm
F-238512.02			7 grooves

AS AFP0059

ORIGINAL	CARGO		
F00M349810	330356	O.D. Ø	64 mm
F00M391112		Bore:	17 mm
F00M391138		Width:	35.5 mm
F-553393			6 grooves

AS AFP0060

ORIGINAL	CARGO		
F00M991289	330716	O.D. Ø	56 mm
		Bore:	17 mm
		Width:	65 mm
			6 grooves

AS AFP0061

ORIGINAL	CARGO		
F00M991210	331925	O.D. Ø	60 mm
		Bore:	17 mm
		Width:	42 mm
			5 grooves

AS AFP0062

ORIGINAL	CARGO		
F00M991240	235800	O.D. Ø	60 mm
535019110		Bore:	17 mm
		Width:	43 mm
			5 grooves

AS AFP0063

ORIGINAL	IKA		
F00M147877	3 5361 1	O.D. Ø	60 mm
F00M991238		Bore:	17 mm
F00M391118		Width:	43 mm
F00M391120			6 grooves

AS AFP0064

ORIGINAL	CARGO		
F00M349860	239914	O.D. Ø	63 mm
F00M391100		Bore:	17 mm
F00M391135		Width:	38 mm
F00M349898			6 grooves

ALTERNATOR FREE WHEEL PULLEYS

AS AFP0065

ORIGINAL	**IKA**	O.D. Ø	53 mm
F00M147878	**3 5369 1**	Bore:	17 mm
F00M991248		Width:	32.5 mm
F-553448			6 grooves

AS AFP0066

ORIGINAL	**IKA**	O.D. Ø	59 mm
F00M147880	**3 5381 1**	Bore:	17 mm
F00M991251		Width:	36.5 mm
F-553322			5 grooves
F-553322.01			

AS AFP0067

ORIGINAL	**CARGO**	O.D. Ø	61 mm
F00M349823	**331651**	Bore:	17 mm
F00M391124		Width:	36 mm
F-557564			5 grooves
F-557565			

AS AFP0068

ORIGINAL	**IKA**	O.D. Ø	53 mm
0121C00401	**3 5386 1**	Bore:	17 mm
F00M349824		Width:	33 mm
F00M349899			7 grooves
F-554007.02			

AS AFP0069

ORIGINAL	**IKA**	O.D. Ø	54.5 mm
F00M349859	**3 5387 1**	Bore:	17 mm
F00M349870		Width:	38 mm
F00M391131			6 grooves
F-560565			

AS AFP0070

ORIGINAL	**IKA**	O.D. Ø	59 mm
TA436	**3 5388 1**	Bore:	17 mm
504088796		Width:	36 mm
F-550532			6 grooves
F-550532.01			

AS AFP0071

ORIGINAL		O.D. Ø	55 mm
F00M991134		Bore:	17 mm
F-2269625		Width:	36 mm
F-2269628			6 grooves

ALTERNATOR FREE WHEEL PULLEYS

AS AFP1001

ORIGINAL	CARGO		
F-231618.1	230527	O.D. Ø	59.7 mm
		Bore:	17 mm
		Width:	32.7 mm
			5 grooves

AS AFP1002

ORIGINAL	CARGO		
10484670	230526	O.D. Ø	56.65 mm
F-230753		Bore:	17 mm
		Width:	36.6 mm
			6 grooves

AS AFP2001

ORIGINAL	CARGO		
L1100G-7500	233989	O.D. Ø	52.5 mm
		Bore:	17 mm
		Width:	39.7 mm
			6 grooves

AS AFP2002

ORIGINAL	CARGO		
F-240113	238690	O.D. Ø	59.82 mm
		Bore:	17 mm
		Width:	39.62 mm
			6 grooves

AS AFP2003

ORIGINAL	CARGO		
L170G-25003	230521	O.D. Ø	59.7 mm
GD215541		Bore:	17 mm
F-228751		Width:	39 mm
			7 grooves

ALTERNATOR FREE WHEEL PULLEYS

AS AFP3001

ORIGINAL	CARGO		
F-226954.3	230297	O.D. Ø	49.7 mm
593492		Bore:	17 mm
		Width:	48.9 mm
			5 grooves

AS AFP3002

ORIGINAL	CARGO		
2547655	230524	O.D. Ø	48.8 mm
F-229643.4		Bore:	17 mm
593492		Width:	37.8 mm
			6 grooves

AS AFP3003

ORIGINAL	CARGO		
2547737	230310	O.D. Ø	51.9 mm
F-230759.1		Bore:	17 mm
		Width:	48 mm
			5 grooves

AS AFP3004

ORIGINAL	CARGO		
2546952	230522	O.D. Ø	55.8 mm
F-228881.2		Bore:	17 mm
		Width:	40.1 mm
			6 grooves

AS AFP3005

ORIGINAL	CARGO		
F-229603.14	230523	O.D. Ø	54.4 mm
		Bore:	17 mm
		Width:	34.8 mm
			6 grooves

AS AFP3006

ORIGINAL	CARGO		
F233595.1	234569	O.D. Ø	56 mm
		Bore:	17 mm
		Width:	37.8 mm
			6 grooves

AS AFP3007

	CARGO		
	237674	O.D. Ø	68 mm
		Bore:	17 mm
		Width:	41 mm
			7 grooves

AS AFP3008

ORIGINAL	CARGO		
F-237101.1	236995	O.D. Ø	54 mm
		Bore:	17 mm
		Width:	37.5 mm
			6 grooves

AS AFP3009

ORIGINAL	CARGO		
F-236591.1	234794	O.D. Ø	54.2 mm
		Bore:	17 mm
		Width:	38 mm
			6 grooves

ALTERNATOR FREE WHEEL PULLEYS

AS AFP3010

ORIGINAL	CARGO		
593618	233847	O.D. Ø	49.7 mm
593930		Bore:	17 mm
		Width:	37.7 mm
			5 grooves

AS AFP3011

ORIGINAL	CARGO		
593516	233590	O.D. Ø	48.8 mm
2548621		Bore:	17 mm
7711134312		Width:	37 mm
			5 grooves

AS AFP3012

ORIGINAL	CARGO		
2601593	235479	O.D. Ø	59.65 mm
593782		Bore:	17 mm
		Width:	38.1 mm
			6 grooves

AS AFP3013

ORIGINAL	CARGO		
593527	234149	O.D. Ø	59 mm
593907		Bore:	17 mm
2602877		Width:	33,5 mm
F-229603.2			6 grooves

AS AFP3014

ORIGINAL	CARGO		
593494	237320	O.D. Ø	61 mm
2548703A		Bore:	17 mm
F-234739		Width:	43 mm
535003610			6 grooves

AS AFP3015

ORIGINAL	CARGO		
593977	238339	O.D. Ø	52 mm
2601991		Bore:	17 mm
F-238419.02		Width:	36.5 mm
F-239973.01			5 grooves

AS AFP3016

ORIGINAL	CARGO		
595226	330200	O.D. Ø	53 mm
8200489514		Bore:	17 mm
F-236675.02		Width:	41 mm
			7 grooves

AS AFP3017

ORIGINAL	CARGO		
8200399801	235505	O.D. Ø	59 mm
JK58A-01636A		Bore:	17 mm
F-550379		Width:	42.5 mm
535010910			5 grooves

AS AFP3018

ORIGINAL	CARGO		
593610	231584	O.D. Ø	59 mm
595210		Bore:	17 mm
F-550181		Width:	44 mm
F-557755			6 grooves

ALTERNATOR FREE WHEEL PULLEYS

AS AFP3019

ORIGINAL	**IKA**	O.D. Ø	54 mm
595239	**3 5348 1**	Bore:	17 mm
F-551657.01		Width:	52 mm
			8 grooves

AS AFP3020

ORIGINAL	**CARGO**	O.D. Ø	55 mm
593960	**235812**	Bore:	17 mm
2604641		Width:	50.5 mm
2603330			7 grooves
F-239808.01			

AS AFP3021

ORIGINAL	**IKA**	O.D. Ø	55 mm
2604126	**3 5391 1**	Bore:	17 mm
2604640		Width:	44 mm
F-552901.02			6 grooves
6461550115			

AS AFP3022

ORIGINAL	**IKA**	O.D. Ø	61 mm
595258	**3 5392 1**	Bore:	17 mm
F-557311		Width:	50 mm
F-557311.01			7 grooves
2711550215			

AS AFP3023

ORIGINAL		O.D. Ø	69 mm
593920		Bore:	17 mm
2604507		Width:	46 mm
06E903119E			6 grooves
F-239779			

AS AFP3024

ORIGINAL	**CARGO**	O.D. Ø	58 mm
F-554755.01	**234569**	Bore:	17 mm
535013710		Width:	36 mm
2650319			6 grooves

AS AFP3025

ORIGINAL	**IKA**	O.D. Ø	65 mm
595333	**3 5439 1**	Bore:	17 mm
F-556311		Width:	45.5 mm
06E903119Q			6 grooves

ALTERNATOR FREE WHEEL PULLEYS

AS AFP4001

ORIGINAL	CARGO		
F-230866	230313	O.D. Ø	65 mm
		Bore:	17 mm
		Width:	37.9 mm
			6 grooves

AS AFP4002

ORIGINAL	CARGO		
F-554053.01	235719	O.D. Ø	61.5 mm
F-554053.02		Bore:	17 mm
9951269		Width:	40 mm
9949129			6 grooves

AS AFP4003

ORIGINAL		
F-237045	O.D. Ø	61 mm
F-237045.02	Bore:	17 mm
83653301	Width:	35 mm
		7 grooves

AS AFP4004

ORIGINAL	CARGO		
46441617	231511	O.D. Ø	75 mm
85561381		Bore:	17 mm
		Width:	47 mm
			6 grooves

AS AFP4005

ORIGINAL	CARGO		
8362959	235476	O.D. Ø	61 mm
535003710		Bore:	17 mm
F-234359		Width:	37 mm
F-552016.01			6 grooves

ALTERNATOR FREE WHEEL PULLEYS

AS AFP5001

ORIGINAL	CARGO		
A628X91371	234867	O.D. Ø	65 mm
		Bore:	17 mm
		Width:	38.7 mm
			6 grooves

AS AFP5002

ORIGINAL	CARGO		
A628X92171	235424	O.D. Ø	55.65 mm
		Bore:	17 mm
		Width:	36.55 mm
			6 grooves

AS AFP5003

ORIGINAL	CARGO		
A628X91871	235071	O.D. Ø	82 mm
		Bore:	17 mm
		Width:	34.2 mm
			1 groove

AS AFP5004

ORIGINAL	CARGO		
F236001	238068	O.D. Ø	65 mm
RF5C-18-330		Bore:	17 mm
F-236001		Width:	40 mm
F-236001.01			8 grooves

AS AFP5005

ORIGINAL	CARGO		
A252C54375	330339	O.D. Ø	59,5 mm
A525C54375		Bore:	17 mm
F-550379.02		Width:	47 mm
			6 grooves

AS AFP5006

ORIGINAL	CARGO		
A252C52775	330240	O.D. Ø	58 mm
JK58A01635A		Bore:	17 mm
F-550426		Width:	40 mm
			6 grooves

AS AFP5007

ORIGINAL	CARGO		
A252C55875	330516	O.D. Ø	53 mm
23151-JG71B		Bore:	17 mm
F-552305		Width:	38 mm
			7 grooves

AS AFP5008

ORIGINAL	IKA		
F-552386.01	3 5411 1	O.D. Ø	69 mm
A252C564FE		Bore:	17 mm
23151-EB301		Width:	40 mm
23151-EB30A			7 grooves

AS AFP5009

ORIGINAL	CARGO		
1800A061	235649	O.D. Ø	58.8 mm
F-552562		Bore:	17 mm
535014510		Width:	mm
			6 grooves

ALTERNATOR FREE WHEEL PULLEYS

AS AFP6001

ORIGINAL **CARGO**
F-233106.1 **237500**

O.D. Ø 60 mm
Bore: 15 mm
Width: 37.3 mm
6 grooves

AS AFP6002

INA
F-557928
920789

O.D. Ø 55.5 mm
Bore: 17 mm
Width: 39.4 mm
6 grooves

FIAT 1.25 JTD 4cyl. Series A115

AS AFP6003

ORIGINAL
021040-1001
021040-1040
021040-1042
021040-1180

O.D. Ø 64 mm
Bore: 17 mm
Width: 51 mm
6 grooves

AS AFP6004

ORIGINAL **CARGO**
021040-0970 **230314**
F-231108
F-231108.02

O.D. Ø 55.6 mm
Bore: 17 mm
Width: 41.5 mm
6 grooves

AS AFP6005

ORIGINAL **CARGO**
021040-1070 **236763**
104210-3410

O.D. Ø 63 mm
Bore: 15 mm
Width: 41.4 mm
7 grooves

AS AFP6006

ORIGINAL **CARGO**
021040-0960 **230525**
021040-1140

O.D. Ø 58.75 mm
Bore: 17 mm
Width: 41.5 mm
6 grooves

AS AFP6007

ORIGINAL **CARGO**
072011-0750 **233990**
071011-0750

O.D. Ø 59.8 mm
Bore: 17 mm
Width: 35 mm
6 grooves

AS AFP6008

ORIGINAL
021040-1110
021040-1190
021040-1450
121041-1450

O.D. Ø 63 mm
Bore: 17 mm
Width: 45.2 mm
6 grooves

AS AFP6009

ORIGINAL **CARGO**
021040-1400 **235696**
021040-1570
F-239912.01
535010710

O.D. Ø 66 mm
Bore: 17 mm
Width: 40 mm
5 grooves

ALTERNATOR FREE WHEEL PULLEYS

AS AFP6010

ORIGINAL	**CARGO**	O.D. Ø	63 mm
F-570753	**236332**	Bore:	17 mm
27415-27011		Width:	41 mm
			5 grooves

AS AFP6011

INA	**CARGO**	O.D. Ø	66 mm
F-568860	**237582**	Bore:	15 mm
27411-33050		Width:	39 mm
27415-33010			5 grooves

AS AFP6012

ORIGINAL	**CARGO**	O.D. Ø	59 mm
F-568861	**237610**	Bore:	17 mm
WCPN36RC4X		Width:	40 mm
535018110			6 grooves
8603182			

AS AFP6013

ORIGINAL	**CARGO**	O.D. Ø	58 mm
121041-1140	**330287**	Bore:	17 mm
77363948		Width:	39 mm
F-238822			6 grooves
535011210			

AS AFP6014

ORIGINAL	**CARGO**	O.D. Ø	61,5 mm
27415-0W040	**330850**	Bore:	17 mm
27415-0W041		Width:	40 mm
			7 grooves

AS AFP6015

ORIGINAL	**IKA**	O.D. Ø	63 mm
27415-27011	**3 5308 1**	Bore:	17 mm
F-570753	**3 5421 1**	Width:	40 mm
			5 grooves

AS AFP6017

ORIGINAL	**IKA**	O.D. Ø	59 mm
27415-0W010A	**3 5415 1**	Bore:	17 mm
27415-0W010B		Width:	40 mm
27415-0W010C			7 grooves
27415-0W0130			

ALTERNATOR FREE WHEEL PULLEYS

AS AFP9003

ORIGINAL **CARGO**
3395450 **230308**

O.D. Ø 59.7 mm
Bore: 17 mm
Width: 36.5 mm
6 grooves

AS AFP9004

ORIGINAL
YC1U-10352-BA
YC1U-10352-BB
CARGO
235157

O.D. Ø 61 mm
Bore: 17 mm
Width: 44.5 mm
7 grooves

AS AFP9005

INA
535012010
F-558404

O.D. Ø 60 mm
Bore: 17 mm
Width: 38.7 mm
7 grooves

AS AFP9006

ORIGINAL **CARGO**
F-233608.1 **235494**
5M5Q-10344-AA

O.D. Ø 58.7 mm
Bore: 17 mm
Width: 36 mm
6 grooves

AS AFP9007

ORIGINAL **CARGO**
F-232854.3 **234401**
1S7U-10A352-DB

O.D. Ø 53.1 mm
Bore: 17 mm
Width: 36.9 mm
6 grooves

AS AFP9008

ORIGINAL
53013554AD
53013554AE
021040-1130
021040-1170

O.D. Ø 63 mm
Bore: 17 mm
Width: 42.5 mm
6 grooves

AS AFP9009

ORIGINAL
VP2M5U-10A352-AA
VP6S4U-10A352-AA
535010010
F-235931

O.D. Ø 62 mm
Bore: 17 mm
Width: 37 mm
6 grooves
FORD FOCUS MK1 2.0 ST170

AS AFP9010

ORIGINAL **CARGO**
F-235492 **235503**
F-556614
VP2PSU-10A352-BA
VP2PSU-10A352-CA

O.D. Ø 59 mm
Bore: 17 mm
Width: 39 mm
6 grooves

AS AFP9011

ORIGINAL **CARGO**
37322-2A000 **330063**
37322-2A110
F-236071.02
595286

O.D. Ø 61 mm
Bore: 17 mm
Width: 40 mm
5 grooves

ALTERNATOR COMBI TOOLS

AS AFP9001

Repl. Bearing for free weel pulley

AS AFP9002

Cover for pulley **CARGO**
138236

AS AT0001

IKA	CARGO
342000	210843

AS AT0002

IKA	CARGO
335700	210909

AS AT0003

IKA	CARGO
335300	210948

AS AT0004

IKA
335750

AS AT0005

IKA	CARGO
353060	210877

AS AT0006

AS AT0007

ALTERNATOR PULLEYS
BOSCH

AS AP0001

ORIGINAL	CARGO		
1126600154	131200	O.D. Ø	68 mm
1126600222		Bore:	17 mm
		Width:	49 mm
			single groove

AS AP0002

ORIGINAL	CARGO		
1126600568	131844	O.D. Ø	49.6 mm
1126601544		Bore:	17 mm
		Width:	38.3 mm
			6 grooves

AS AP0003

ORIGINAL	CARGO		
1126600517	131845	O.D. Ø	55.1 mm
1126600569		Bore:	17 mm
		Width:	37.7 mm
			6 grooves

AS AP0004

ORIGINAL	CARGO		
1126600570	131846	O.D. Ø	63 mm
		Bore:	17 mm
		Width:	37.8 mm
			6 grooves

AS AP0005

ORIGINAL	CARGO		
1126600625	135944	O.D. Ø	64 mm
1126600861		Bore:	17 mm
		Width:	32 mm
			single groove

AS AP0008

ORIGINAL	CARGO		
1126601529	136843	O.D. Ø	67 mm
		Bore:	17 mm
		Width:	13.6 mm
			single groove

AS AP0009

DESCRIPTON 1/2		
	O.D. Ø	69 mm
	Bore:	17 mm
	Width:	42 mm
		single groove

AS AP0010

DESCRIPTION 1/8		
	O.D. Ø	69 mm
	Bore:	17 mm
	Width:	22 mm
		single groove

AS AP0011

ORIGINAL	CARGO		
1126600950	138070	O.D. Ø	49.3 mm
1126601524		Bore:	17 mm
		Width:	36.7 mm
			6 grooves

ALTERNATOR PULLEYS
BOSCH

AS AP0012

ORIGINAL **F00M991004**
CARGO **139932**

O.D. Ø 56.2 mm
Bore: 17 mm
Width: 36.8 mm
6 grooves

AS AP0013

ORIGINAL **F00M991017**
CARGO **230121**

O.D. Ø 67 mm
Bore: 17 mm
Width: 37.5 mm
6 grooves

AS AP0014

Double
B- Belt type

O.D. Ø 97 mm
Bore: 17 mm
Width: 35 mm
2 grooves

Repl. Mercedes, MAN

AS AP0015

Repl. CA1666IR

O.D. Ø 77 mm
Bore: 17 mm
Width: 42 mm
9 grooves

AS AP0016

Repl. CA1666IR

O.D. Ø 77mm
Bore: 17 mm
Width: 49 mm
11 grooves

AS AP0017

Repl. CA1666IR

O.D. Ø 71 mm
Bore: 17 mm
Width: 42 mm
8 grooves

AS AP0018

ORIGINAL **1126600976**
CARGO **135776**

O.D. Ø 56.1 mm
Bore: 17 mm
Width: 49 mm
4 grooves

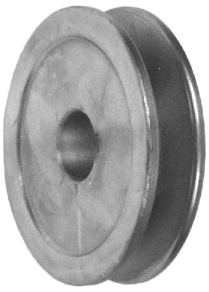

AS AP0019

ORIGINAL **1126600218**
CARGO **138339**

O.D. Ø 62 mm
Bore: 17 mm
Width: 16.4 mm
single groove

AS AP0020

ORIGINAL **F00M061001** **1126601513** **1126601520**
CARGO **138069**

O.D. Ø 56.5 mm
Bore: 17 mm
Width: 24.9 mm
6 grooves

ALTERNATOR PULLEYS
BOSCH

AS AP0021

ORIGINAL	CARGO		
F00M991005	230475	O.D. Ø	53 mm
F00M991185		Bore:	17 mm
		Width:	27 mm
			5 grooves

ALTERNATOR PULLEYS
HITACHI/VALEO

AS AP2001

ORIGINAL	CARGO		
L160-25001	136117	O.D. Ø	84.3 mm
		Bore:	17 mm
		Width:	19.1 mm
			single groove

AS AP2002

ORIGINAL	CARGO		
L1100G-2200	138372	O.D. Ø	80 mm
		Bore:	17 mm
		Width:	19.1 mm
			single groove

AS AP3001

ORIGINAL	CARGO		
3472808	136364	O.D. Ø	71.4 mm
		Bore:	17 mm
		Width:	20 mm
			single groove

AS AP3002

ORIGINAL	CARGO		
10475021	136601	O.D. Ø	50 mm
		Bore:	17 mm
		Width:	33 mm
			6 grooves

AS AP3003

ORIGINAL	CARGO		
593610	231584	O.D. Ø	54.3 mm
		Bore:	17 mm
		Width:	41.6 mm
			6 grooves

AS AP3004

CARGO		
233797	O.D. Ø	54 mm
	Bore:	17 mm
	Width:	41 mm
		5 grooves

AS AP3005

ORIGINAL	CARGO		
593754	230288	O.D. Ø	54 mm
		Bore:	17 mm
		Width:	25.75 mm
			6 grooves

AS AP3006

ORIGINAL	CARGO		
593668	236137	O.D. Ø	49.30 mm
		Bore:	17 mm
		Width:	35.50 mm
			7 grooves

AS AP3007

ORIGINAL	CARGO		
593701	136351	O.D. Ø	54 mm
		Bore:	17 mm
		Width:	39 mm
			6 grooves

ALTERNATOR PULLEYS
VALEO/MAGNETI

AS AP3008

ORIGINAL	CARGO		
593728	231857	O.D. Ø	53.5 mm
		Bore:	17 mm
		Width:	32 mm
			5 grooves

AS AP3009

ORIGINAL	CARGO		
593608	234377	O.D. Ø	60 mm
		Bore:	17 mm
		Width:	36.4 mm
			6 grooves

AS AP4001

ORIGINAL	CARGO		
85561211	139412	O.D. Ø	62 mm
		Bore:	17 mm
		Width:	37 mm
			6 grooves

AS AP4002

Repl.	CARGO		
CA1220IR	139074	O.D. Ø	60.1mm
ORIGINAL		Bore:	17 mm
85561051		Width:	35.4 mm
			5 grooves

AS AP4003

ORIGINAL	CARGO		
85561381	231511	O.D. Ø	62 mm
		Bore:	17 mm
		Width:	52.3 mm
			6 grooves

AS AP4004

CARGO		
134518	O.D. Ø	66.4 mm
	Bore:	17 mm
	Width:	22 mm
		4 grooves

AS AP4005

ORIGINAL	CARGO		
85562741	234627	O.D. Ø	54.3 mm
085562741010		Bore:	17 mm
		Width:	28.1 mm
			5 grooves

AS AP4006

O.D. Ø	64.5 mm	
Bore:	17 mm	
Width:	32 mm	
	6 grooves	

ALTERNATOR PULLEYS
MITSUBISHI

AS AP5001

CARGO	O.D. Ø	49 mm
235228	Bore:	17 mm
	Width:	30.5 mm
		6 grooves

for CA1780IR

ALTERNATOR RECTIFIERS
BOSCH

AS ARC0001

ORIGINAL	TRANSPO	CARGO
1127011131	IBR301	134341

B+ 33.5 **B+ thread** M6 **O.D.** 112.5 **I.D.**35.5
Mounting dist. 65

AS ARC0002

ORIGINAL	TRANSPO	CARGO
1127011116	IBR302	131559

O.D. 114, **I.D.** 37, **Mounting dist.** 85

AS ARC0003

ORIGINAL	TRANSPO	CARGO
127011115	IBR303	130603

O.D. 114, **I.D.** 37, **Mounting dist.** 85

AS ARC0004

ORIGINAL	TRANSPO	CARGO
1127011125	IBR304	130602

B+ 33.5, **B+ thread** M6, **O.D.** 114,
I.D. 37, **Mounting dist.** 65

AS ARC0005

ORIGINAL	TRANSPO	CARGO
1127320664	IBR311	132667

B+ 34.5, **B+ thread** M8, **D+** 27,
D+ thread M5, **O.D.** 114, **I.D.** 36.5

AS ARC0006

ORIGINAL	TRANSPO	CARGO
1127011098	IBR313	133138
1127320599		

B+ 34, **B+ thread** M6, **D+** 20,
D+ thread M5, **O.D.** 114, **I.D.** 35.5

AS ARC0007

ORIGINAL	TRANSPO	CARGO
1127011103	IBR314	131468

B+ 35, **B+ thread** M6, **O.D.** 114,
I.D. 35.5, **Mounting dist.** 65

AS ARC0008

ORIGINAL	TRANSPO	CARGO
1127320909	IBR315	133995
9127041132		

B+ 34, **B+ thread** M8, **D+** 20.5,
D+ thread M5, **O.D.** 114, **I.D.** 34.5

AS ARC0009

ORIGINAL	TRANSPO	CARGO
1127320601	IBR316	132668

B+ 34.5, **B+ thread** M8, **D+** 27.5,
D+ thread M5, **O.D.** 114, **I.D.** 37

ALTERNATOR RECTIFIERS
BOSCH

AS ARC0010

ORIGINAL	TRANSPO	CARGO
1127320668	IBR319	133994

B+ 33.5, **B+ thread** M6, **D+** 25,
D+ thread M4, **O.D.** 114, **I.D.** 34

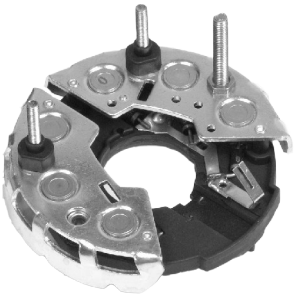

AS ARC0011

ORIGINAL	TRANSPO	CARGO
9121147302	IBR320	133997

B+ 34.5, **B+ thread** M6, **D+** 17.5,
D+ thread M5, **O.D.** 112, **I.D.** 36.5

AS ARC0012

ORIGINAL	TRANSPO	CARGO
1127320651	IBR321	133996

B+ 34.5, **B+ thread** M6 / M8, **D+** 27.5,
D+ thread M5, **O.D.** 112.5, **I.D.** 36.5

AS ARC0013

ORIGINAL	TRANSPO	CARGO
9121080963	IBR325	133138

B+ 34, **B+ thread** M6, **D+** 20,
D+ thread M5, **O.D.** 114, **I.D.** 35.5

AS ARC0014

ORIGINAL	TRANSPO	CARGO
1127320541	IBR326	131468

B+ 35, **B+ thread** M6, **O.D.** 114,
I.D. 35.5, **Mounting dist.** 65

AS ARC0015

ORIGINAL	TRANSPO	CARGO
1127320718	IBR329	138987

B+ 46, **B+ thread** M6 / M8, **O.D.** 120,
I.D. 36, **Mounting dist.** 65

AS ARC0016

ORIGINAL	TRANSPO	CARGO
1127320361	IBR340	139581

Diode Amp. 40, **B+** 33, **B+ thread** M8,
D+ 33, **D+ thread** M6, **O.D.** 125, **I.D.**
36.5, **Mounting dist.** 53

AS ARC0017

ORIGINAL	TRANSPO	CARGO
1127320961	IBR341	139581

Diode Amp. 40, **B+** 33, **B+ thread** M8,
D+ 33, **D+ thread** M6, **O.D.** 125, **I.D.**36.5,
Mounting dist. 53

AS ARC0018

ORIGINAL	TRANSPO	CARGO
1127320701	IBR350	232172

B+ 31.5, **B+ thread** M8, **O.D.** 120,
I.D. 36, **Mounting dist.** 65

ALTERNATOR RECTIFIERS
BOSCH

AS ARC0019

ORIGINAL	TRANSPO	CARGO
1127320700	IBR351	132103

B+ 31.5, **B+ thread** M8, **D+ thread** 6.5,
O.D. 121, **I.D.** 36.5, **Mounting dist.** 65

AS ARC0020

ORIGINAL	TRANSPO	CARGO
1127320706	IBR353	134002

B+ 32, **B+ thread** M8, **D+** 24.5,
D+ thread M5, **O.D.** 121, **I.D.** 36.5,
Mounting dist. 65

AS ARC0021

ORIGINAL	TRANSPO	CARGO
1127320705	IBR354	233778

B+ 33, **B+ thread** M8, **D+** 20,
D+ thread M5, **O.D.** 120, **I.D.** 36.5,
Mounting dist. 65

AS ARC0022

ORIGINAL	TRANSPO	CARGO
1127320702	IBR355	133261

B+ 28.5, **B+ thread** M8, **D+** 30.3,
D+ thread M5, **O.D.** 120, **I.D.** 37,
Mounting dist. 65

AS ARC0023

ORIGINAL	TRANSPO	CARGO
1127320708	IBR357	134003

B+ 34, **B+ thread** M8, **D+** 21.5,
D+ thread M5, **O.D.** 121, **I.D.** 35.5,
Mounting dist. 65

AS ARC0024

ORIGINAL	TRANSPO	CARGO
1127320590	IBR590	134609

B+ 30.5, **B+ thread** M6, **D+** 23,
D+ thread M4, **O.D.** 125.5, **I.D.** 34.5,
Mounting dist. 80

AS ARC0026

ORIGINAL	TRANSPO	CARGO
1127320712	IBR712	138164

Diode Amp. 90, **B+** 27.5, **B+ thread** M8,
D+ 28, **D+ thread** M5, **O.D.** 121, **I.D.** 36,
Mounting dist. 85

AS ARC0027

ORIGINAL	TRANSPO	CARGO
1127320713	IBR713	138620

B+ 34, **B+ thread** M6 / M8, **D+** 22,
D+ thread M5, **O.D.** 121.5, **I.D.** 36,
Mounting dist. 65

AS ARC0028

ORIGINAL	TRANSPO	CARGO
1127320720	IBR720	136372

B+ 34.5, **B+ thread** M8, **D+** 21.5,
D+ thread M6, **O.D.** 121.5, **I.D.** 36,
Mounting dist. 65

ALTERNATOR RECTIFIERS
BOSCH

AS ARC0029

ORIGINAL	TRANSPO	CARGO
1127320807	IBR844	137333

Diode Amp. 90, **B+** 23.5, **B+ thread** M8, **D+** 9.5, **D+ thread** M5, **O.D.** 112, **I.D.** 23, **Mounting dist.** 65

AS ARC0030

ORIGINAL	TRANSPO	CARGO
1127320852	IBR852	138077

B+ 23, **B+ thread** M8, **O.D.** 112, **I.D.** 23, **Mounting dist.** 65

AS ARC0031

ORIGINAL	TRANSPO	CARGO
1127319623	IBR882	137257

B+ 34, **B+ thread** M8, **D+** 20, **D+ thread** M6, **O.D.** 106.5, **I.D.** 23, **Mounting dist.** 65

AS ARC0032

ORIGINAL	TRANSPO	CARGO
1127319101	IBR904	230640

B+ 35.50, **B+ thread** M8, **D+** 30.5, **D+ thread** M6, **O.D.** 121.5, **I.D.** 34.5, **Mounting dist.** 80

AS ARC0034

ORIGINAL	TRANSPO	CARGO
1127320954	IBR954	136737

Diode Amp. 40, **B+** 39, **B+ thread** 7/16" UNC, **D+** 22, **D+ thread** M4, **O.D.** 121, **I.D.** 35, **Mounting dist.** 80

AS ARC0035

ORIGINAL	TRANSPO	CARGO
1127320602	IBR955	136832

Diode Amp. 50, **B+** 32, **B+ thread** M8, **D+** 33, **D+ thread** M6, **O.D.** 120, **I.D.** 34.5

AS ARC0036

ORIGINAL	TRANSPO	CARGO
1127320956	IBR989	136832

Diode Amp. 50, **B+** 32, **B+ thread** M8, **D+** 33, **D+ thread** M6, **O.D.** 120, **I.D.** 34.5

AS ARC0037

ORIGINAL	TRANSPO	CARGO
1127011139	IBR317	132669

B+ 34.5, **B+ thread** M5, **O.D.** 114, **I.D.** 36.5

AS ARC0038

ORIGINAL	TRANSPO	CARGO
1127320550	IBR547	136581

Diode Amp. 50, **B+** 29, **B+ thread** M8, **D+** 25.5, **D+ thread** M5, **O.D.** 145, **I.D.** 39.5, **Mounting dist.** 100

ALTERNATOR RECTIFIERS
BOSCH

AS ARC0039

ORIGINAL	TRANSPO	CARGO
9121067364	IBR308	234953

Diode Amp. 40, **B+** 30, **B+ thread** M8, **O.D.** 114, **I.D.** 36

AS ARC0040

ORIGINAL	CARGO
1127319568	138080

B+ 26, **B+ thread** M8, **D+** 12.5, **D+ thread** M5, **O.D.** 125.5, **I.D.** 23, **Mounting dist.** 65

AS ARC0041

ORIGINAL	TRANSPO	CARGO
1127319637	IBR834	135605

B+ 23.00, **B+ thread** M8, **D+** 11, **D+ thread** M5, **O.D.** 124.5, **I.D.** 23, **Mounting dist.** 65

AS ARC0042

ORIGINAL	CARGO
1127319522	136703

B+ 15, **B+ thread** M8, **D+** 9.5, **D+ thread** M5, **O.D.** 114.5, **I.D.** 23, **Mounting dist.** 65

AS ARC0043

ORIGINAL	TRANSPO	CARGO
F00M133201	IBR201	139921

B+ 20.5, **B+ thread** M8, **O.D.** 120, **I.D.** 28.5, **Mounting dist.** 100

AS ARC0044

ORIGINAL	TRANSPO	CARGO
F00M123202	IBR202	230360

Diode Amp. 50, **B+** 21, **B+ thread** M8, **O.D.** 120, **I.D.** 27, **Mounting dist.** 100

AS ARC0045

ORIGINAL	TRANSPO	CARGO
1127320152	IBR318	130597

O.D. 90.5, **I.D.** 32, **Mounting dist.** 75

AS ARC0046

ORIGINAL	TRANSPO	CARGO
1127319501	IBR501	230173

B+ 23.25, **B+ thread** M5, **O.D.** 123.50, **I.D.** 23.15, **Mounting dist.** 65

AS ARC0047

ORIGINAL	CARGO
1127320870	135444

B+ 22.90, **B+ thread** M6, **D+** 15.70, **D+ thread** M5, **O.D.** 106.75, **I.D.** 22.90, **Mounting dist.** 65

ALTERNATOR RECTIFIERS
BOSCH

AS ARC0048

ORIGINAL **CARGO**
F00M133223 **231524**

B+ 19, **B+ thread** M8, **O.D.** 120,
I.D. 27.5, **Mounting dist.** 100

AS ARC0049

ORIGINAL **CARGO**
1127319794 **234333**

B+ 12, **B+ thread** M8, **O.D.** 123,
I.D. 23.5, **Mounting dist.** 65

AS ARC0050

ORIGINAL **CARGO** **TRANSPO**
1127320750 **231451** **IBR753**

B+ 31.5, **B+ thread** M8, **D+** 22.5,
D+ thread M4, **O.D.** 121.5, **I.D.** 36.5,
Mounting dist. 65

AS ARC0051

ORIGINAL **CARGO**
1127319601 **136482**

B+ 23.5, **B+ thread** M8, **D+** 11.5,
D+ thread M5, **O.D.** 106.5, **I.D.** 22,
Mounting dist. 65

AS ARC0052

ORIGINAL **CARGO** **TRANSPO**
F00M133208 **233469** **IBR266**

B+ 9.5, **B+ thread** M8, **O.D.** 129,
I.D. 28, **Mounting dist.** 100

AS ARC0053

B+ 23, **B+ thread** M8

6 DIODES / WITHOUT DIODE TRIO

AS ARC0054

TERMINAL B+ M8x23

6 DIODES / WITHOUT DIODE TRIO

AS ARC0055

ORIGINAL **TRANSPO**
F00M133226 **IBR226**

AS ARC0056

ORIGINAL **CARGO**
1127319690 **137259**

Diode Amp. 50, **D+** 20.25, **D+** M6,
O.D. 124.00, **I.D.** 23.00

ALTERNATOR RECTIFIERS
BOSCH

AS ARC0057

ORIGINAL	TRANSPO
F00M314001	IBR40011

Diode Amp. 60, **B+ thread** M8

AS ARC0058

ORIGINAL	HUCO
F00M113209	133716

AS ARC0059

ORIGINAL
F00M123324
F00M123250

AS ARC0060

ORIGINAL	HUCO
F00M123210	133717

AS ARC0061

ORIGINAL	CARGO	TRANSPO
1127320115	132670	IBR307

Diode Amp. 35, **O.D.** 90.00, **I.D.** 31.70
with diode Trio

AS ARC0062

ORIGINAL	CARGO	TRANSPO
1127319113	135890	IBR667

Diode Amp. 50, **D+** 25.00, **D+** M4,
O.D. 114.00, **I.D.** 35.70
with diode Trio, Terminal W.

AS ARC0063

ORIGINAL	TRANSPO	CARGO
1127320914	IBR322	133998

Diode Amp. 35, **D+** 27.90, **D+** M5,
O.D. 114.00, **I.D.** 36.70

AS ARC0064

ORIGINAL	CARGO
F00M133240	331002

B+ 8.90, **B+ thread** M8, **O.D.** 133.00,
Mounting dist. 70

AS ARC0065

ORIGINAL	CARGO
F00M133218	235218

B+ 20.00, **B+ thread** M8, **O.D.** 130.00,
I.D. 29.00

ALTERNATOR RECTIFIERS
DELCO

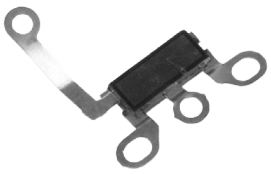

AS ARC1001

ORIGINAL	TRANSPO	CARGO
DR3901	DET524	130674

O.D. 44.50, **Mount. hole I.D.** 7,
Dist. between mount. holes 35

AS ARC1002

ORIGINAL	TRANSPO	CARGO
10475034	DER2000	136595

Diode Amp. 100, **B+** 35, **B+ thread** M8,
D+ thread 34.5, **O.D.** 94,
Mounting dist. 75

AS ARC1003

ORIGINAL	TRANSPO	CARGO
10493596	DER2010	231797

B+ 13, **B+ thread** M8, **O.D.** 96.5,
Mounting dist. 75

AS ARC1004

ORIGINAL	TRANSPO	CARGO
10494503	DR4400	232668

Diode Amp. 70, **B+** 15.5, **B+ thread** M6,
O.D. 116, **I.D.** 33, **Mounting dist.** 85

AS ARC1005

ORIGINAL	TRANSPO	CARGO
1989658	DR4000	131880

O.D. 103.5, **H.** 17

AS ARC1006

ORIGINAL	TRANSPO	CARGO
10475758	DR4200	231200

Diode Amp. 50, **B+** 37, **B+ thread** M8,
O.D. 103, **Mounting dist.** 71.5

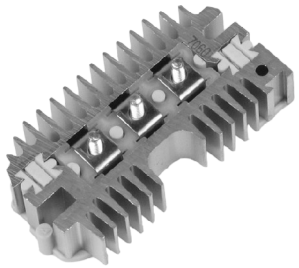

AS ARC1007

ORIGINAL	TRANSPO	CARGO
1852209	DR5040	130673

Diode Amp. 35, **O.D.** 80, **I.D.** 32,
Mounting dist. 75

AS ARC1009

TRANSPO	CARGO
DR5045	233195

Diode Amp. 25, **O.D.** 79.5

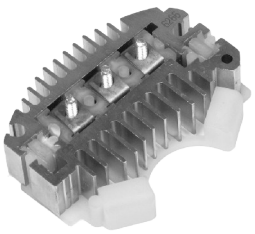

AS ARC1010

ORIGINAL	TRANSPO	CARGO
1984454	DR5050, DR5052	131873

Diode Amp. 25, **O.D.** 79.5

ALTERNATOR RECTIFIERS
DELCO

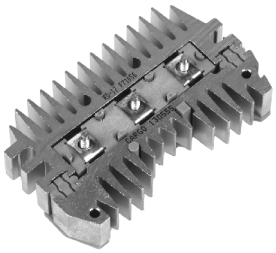

AS ARC1012

ORIGINAL	TRANSPO	CARGO
1875645	DR5080, DR5082	130555

Diode Amp. 50, **O.D.** 101.5

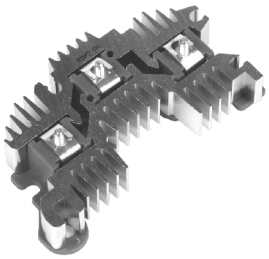

AS ARC1014

ORIGINAL	TRANSPO	CARGO
1988976	DR5173	131877

Diode Amp. 70, **O.D.** 102

AS ARC1015

ORIGINAL	TRANSPO	CARGO
10469265	DR5174	231061

Diode Amp. 50, **O.D.** 102.5,
Mounting dist. 85

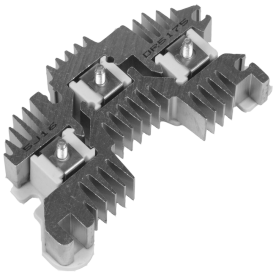

AS ARC1016

ORIGINAL	TRANSPO	CARGO
10471170	DR5175	131881

Diode Amp. 50, **O.D.** 102.5, **I.D.** 34

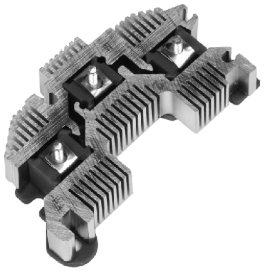

AS ARC1017

ORIGINAL	TRANSPO	CARGO
10467052	DR5176	131881

Diode Amp. 50, **O.D.** 102.5, **I.D.** 34

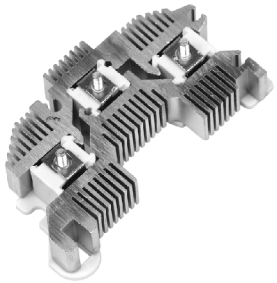

AS ARC1018

ORIGINAL	TRANSPO	CARGO
10470609	DR5177	231062

Diode Amp. 50, **O.D.** 102,
Mounting dist. 85

AS ARC1019

ORIGINAL	TRANSPO	CARGO
10475039	DR5165	230983

Diode Amp. 25, **O.D.** 102,
Mounting dist. 71.5

AS ARC1020

ORIGINAL	TRANSPO	CARGO
262100	DR5166	138389

Diode Amp. 35, **O.D.** 103.5,
Mounting dist. 53.

AS ARC1021

CARGO
233447

O.D. 98.5, **Mounting dist.** 53

ALTERNATOR RECTIFIERS
DELCO

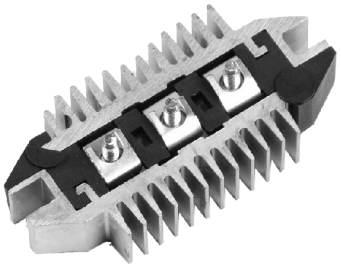

AS ARC1022

ORIGINAL	TRANSPO	CARGO
3493008	DER1004	132931

Diode Amp. 50, **O.D.** 80,
Mounting dist. 71.5

AS ARC1023

CARGO	TRANSPO
235028	DR9411

Diode Amp. 50, **B+** 23, **B+ thread** M6,
O.D. 99, **Mounting dist.** 65

AS ARC1024

CARGO
235655

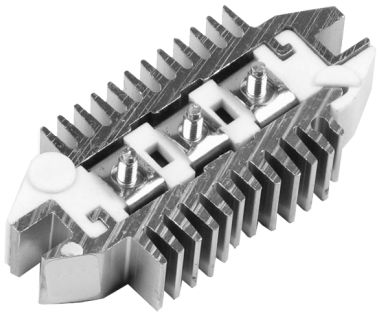

AS ARC1025

ORIGINAL	TRANSPO	CARGO
3472813	DER1003	131458

Diode Amp. 25, **O.D.** 80.50
w/o Diode Trio.

ALTERNATOR RECTIFIERS
HITACHI

AS ARC2001

ORIGINAL	TRANSPO	CARGO
L150-13203	IHR603, IHR605	131598

Diode Amp. 50/70, **B+** 20,
B+ thread M5, **O.D.** 118, **I.D.** 42,
Mounting dist. 100

AS ARC2002

ORIGINAL	TRANSPO	CARGO
L150-13204	IHR604	131599

O.D. 111, **I.D.** 43.5, **Mounting dist.** 85

AS ARC2004

ORIGINAL	TRANSPO	CARGO
L160-23201	IHR607	132053

O.D. 118, **I.D.** 44

AS ARC2005

ORIGINAL	TRANSPO	CARGO
L150-13206	IHR709, IHR710	131600

Diode Amp. 35, **O.D.** 111, **I.D.** 50

AS ARC2006

ORIGINAL	TRANSPO	CARGO
L150-13205	IHR711	131602

O.D. 110, **I.D.** 44.5, **Mounting dist.** 85

AS ARC2007

ORIGINAL	TRANSPO	CARGO
L150M-13202	IHR712	131601

O.D. 111, **I.D.** 51.5

AS ARC2008

ORIGINAL	TRANSPO	CARGO
L160-33202	IHR713	135246

Diode Amp. 40, **B+** 32, **B+ thread** M6,
O.D. 111, **I.D.** 53

AS ARC2009

ORIGINAL	TRANSPO	CARGO
L160-23202	IHR721	135037

O.D. 118, **I.D.** 50

AS ARC2011

ORIGINAL	TRANSPO	CARGO
L150-83201	IHR723	131603

O.D. 111, **I.D.** 43.5

ALTERNATOR RECTIFIERS
HITACHI

AS ARC2012

ORIGINAL	TRANSPO	CARGO
L130M-1330	IHR727	132410

O.D. 100, **I.D.** 52

AS ARC2013

ORIGINAL	TRANSPO	CARGO
L140-53201	IHR728	135757

O.D. 100

AS ARC2014

ORIGINAL	TRANSPO	CARGO
L135-6320	IHR733	135466

O.D. 100, **I.D.** 52

AS ARC2015

ORIGINAL	TRANSPO	CARGO
L135-3320	IHR734	132406

B+ 26.5, **B+ thread** M5, **O.D.** 100, **I.D.** 52.5

AS ARC2016

ORIGINAL	TRANSPO	CARGO
L170G-23203	IHR749	230094

B+ 38, **B+ thread** M8, **O.D.** 101.5, **Mounting dist.** 65

AS ARC2017

ORIGINAL	TRANSPO	CARGO
L170-43202	IHR751	136650

B+ 36, **B+ thread** M6, **O.D.** 103, **Mounting dist.** 43

AS ARC2018

ORIGINAL	TRANSPO	CARGO
L170G-2320	IHR754	135318

B+ 26, **B+ thread** M6, **O.D.** 103, **I.D.** 35.5, **Mounting dist.** 53

AS ARC2019

ORIGINAL	TRANSPO	CARGO
L170G-1320	IHR755, IHR757	136976

B+ 27, **B+ thread** M6, **O.D.** 103

AS ARC2020

TRANSPO	CARGO
IHR769	233620

Diode Amp. 35, **B+** 40, **B+ thread** M8, **O.D.** 114, **Mounting dist.** 65

ALTERNATOR RECTIFIERS
HITACHI

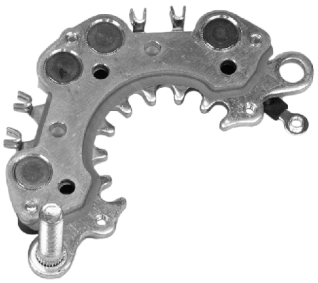

AS ARC2021

ORIGINAL	TRANSPO	CARGO
L170G-13201	IHR746	138732

B+ 44.5, **B+ thread** M8, **O.D.** 115, **Mounting dist.** 71.5

AS ARC2022

ORIGINAL	TRANSPO	CARGO
L1110G-4320	IHR773	138718

B+ 13.5, **B+ thread** M6, **O.D.** 119, **Mounting dist.** 65

AS ARC2023

ORIGINAL	TRANSPO	CARGO
L150-43202	IHR730	137015

O.D. 100, **I.D.** 51, **Mounting dist.** 85

AS ARC2024

ORIGINAL	TRANSPO	CARGO
L170-33202	IHR750	135038

O.D. 103, **Mounting dist.** 75

AS ARC2025

ORIGINAL	TRANSPO	CARGO
L165-3320	IHR724	135035

B+ 28, **B+ thread** M6, **O.D.** 100, **I.D.** 44.5

AS ARC2026

ORIGINAL	TRANSPO	CARGO
L180-2320	IHR717	132099

B+ 46, **B+ thread** M6, **O.D.** 112, **I.D.** 56

AS ARC2027

ORIGINAL	CARGO
L190G-33201	138617

B+ 37, **B+ thread** M5, **O.D.** 118

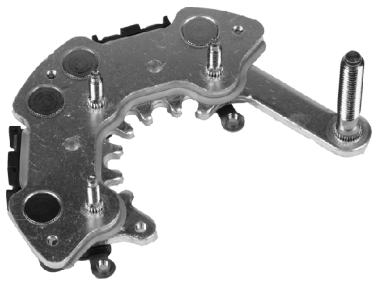

AS ARC2028

ORIGINAL	CARGO
L1100G-5320	231081

B+ 41, **B+ thread** M8, **O.D.** 118

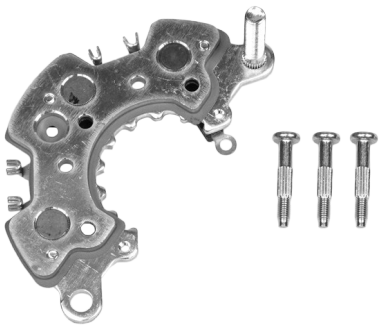

AS ARC2029

CARGO
235729

Diode Amp. 50, **B+** 39, **B+ thread** M8, **O.D.** 128, **I.D.** 45.5

ALTERNATOR RECTIFIERS
HITACHI

AS ARC2030

FOR LR260-512

AS ARC2031

ORIGINAL	TRANSPO	CARGO
L170-23203	IHR753	135039

Diode Amp. 35, **O.D.** 103

AS ARC2032

ORIGINAL	CARGO
L160G-53201 L160G-9320	231442

Diode Amp. 35, **O.D.** 114.00

ALTERNATOR RECTIFIERS
VALEO

AS ARC3001

ORIGINAL	TRANSPO	CARGO
101743	IPR135	131228

Diode Amp. 50, **O.D.** 115.5, **I.D.** 42.5,
Mounting dist. 85

AS ARC3002

ORIGINAL	TRANSPO
100157	IPR157

Diode Amp. 50, **O.D.** 116, **I.D.** 43

AS ARC3003

ORIGINAL	TRANSPO	CARGO
101773	IPR203	131164

Diode Amp. 50, **O.D.** 114.5, **I.D.** 42.5,
Mounting dist. 85

AS ARC3004

ORIGINAL	TRANSPO	CARGO
105252	IPR252	132985

Diode Amp. 50, **O.D.** 115, **I.D.** 44,
Mounting dist. 85

AS ARC3005

ORIGINAL	TRANSPO
180537	IPR537

Diode Amp. 50, **O.D.** 115, **I.D.** 42.5,
Mounting dist. 85

AS ARC3006

ORIGINAL	TRANSPO	CARGO
105135	IPR539	133689

Diode Amp. 50, **O.D.** 115, **I.D.** 44.5,
Mounting dist. 85

AS ARC3007

ORIGINAL	TRANSPO	CARGO
103551	IPR551	131701

Diode Amp. 50, **O.D.** 115.5, **I.D.** 39.5,
Mounting dist. 85

AS ARC3008

ORIGINAL	TRANSPO	CARGO
101713	IPR713	133687

Diode Amp. 50, **O.D.** 114.5, **I.D.** 44.5,
Mounting dist. 86.5

AS ARC3009

ORIGINAL	TRANSPO	CARGO
592747	IPR747	134098

Diode Amp. 50, **O.D.** 115, **I.D.** 45,

In offer also: **ARC3009B** (with right side B+)

ALTERNATOR RECTIFIERS
VALEO

AS ARC3010

ORIGINAL	TRANSPO	CARGO
592741	IPR813	133741

Diode Amp. 50, **O.D.** 114.5, **I.D.** 41,
Mounting dist. 85

AS ARC3011

ORIGINAL	TRANSPO	CARGO
592844	IPR844, IPR845	135427

B+ 23, **B+ thread** M8, **O.D.** 112, **I.D.** 23,
Mounting dist. 65,
6 DIODES + DIODE TRIO

AS ARC3012

ORIGINAL	TRANSPO	CARGO
592846	IPR846	135518

Diode Amp. 50, **B+** 33, **B+ thread** M6-M8,
O.D. 110, **Mounting dist.** 80,
6 DIODES

AS ARC3013

ORIGINAL	TRANSPO
592937	IPR847
2545938	

8 DIODES

AS ARC3014

B+ 20 **B+ thread** M8
6 DIODES / WITHOUT DIODE TRIO

AS ARC3015

ORIGINAL	CARGO
593320	139481

Diode Amp. 32, **B+** 25, **B+ thread** M8,
O.D. 107, **Mounting dist.** 85, **6 DIODES**

AS ARC3016

ORIGINAL	CARGO
593175	137524

B+ 27, **B+ thread** M6, **O.D.** 108,
Mounting dist. 85, **6 DIODES**

AS ARC3017

ORIGINAL	TRANSPO	CARGO
106016	IPR615	131573

Diode Amp. 50, **O.D.** 116, **I.D.** 46,
Mounting dist. 85

AS ARC3018

ORIGINAL	CARGO	MOBILETRON
593174	138303	RP-23

B+ 26, **B+ thread** M8, **O.D.** 108,
Mounting dist. 85, 8 DIODES

ALTERNATOR RECTIFIERS
VALEO

AS ARC3019

ORIGINAL	TRANSPO	CARGO
101342	IPR342	131570

Diode Amp. 50, **O.D.** 118.5, **I.D.** 41.5, **Mounting dist.** 85

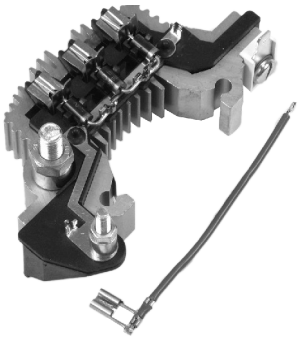

AS ARC3020

ORIGINAL	TRANSPO	CARGO
2523321	MER109	132938

B+ 18, **B+ thread** M8, **D+** 16, **D+ thread** M5, **O.D.** 113, **I.D.** 45.5

AS ARC3021

ORIGINAL	TRANSPO	CARGO
592915	MER592	231736

B+ 23, **B+ thread** M8, **O.D.** 107, **Mounting dist.** 80, 6 DIODES + DIODE TRIO

AS ARC3022

ORIGINAL	TRANSPO	CARGO
A105612A	IPR906	133432

Diode Amp. 35, **O.D.** 87, **Mounting dist.** 75

AS ARC3023

ORIGINAL	CARGO
593345	233614

Diode Amp. 150, **B+** 12, **B+ thread** M8, **O.D.** 102.5, **Mounting dist.** 65

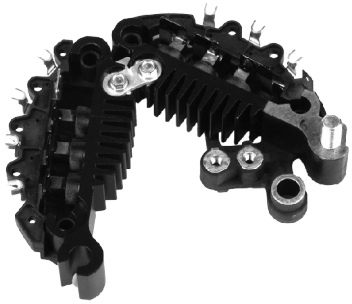

AS ARC3024

ORIGINAL	CARGO
593287	232199

Diode Amp. 50, **B+** 13, **B+ thread** M8, **O.D.** 102.5, **Mounting dist.** 71

AS ARC3025

ORIGINAL	TRANSPO	CARGO
101773	IPR773	131569

Diode Amp. 50 **O.D.** 115

AS ARC3026

ORIGINAL	TRANSPO	CARGO
101227	IPR227	131568

Diode Amp. 35 **O.D.** 115.5, **I.D.** 46, **Mounting dist.** 85

AS ARC3027

ORIGINAL	TRANSPO	CARGO
350011	IPR103	131569

Diode Amp. 50, **O.D.** 115.5, **I.D.** 37, **Mounting dist.** 85

ALTERNATOR RECTIFIERS
VALEO

AS ARC3028

ORIGINAL	CARGO
593205	139483

B+ 26, **B+ thread** M8, **D+** 12,
D+ thread M5, **O.D.** 102.5, **I.D.** 22,
Mounting dist. 85

AS ARC3029

ORIGINAL	CARGO
593547	235652

B+ thread M8/14, **O.D.** 107

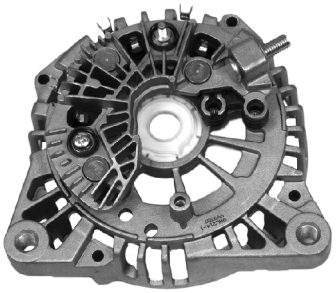

AS ARC3030

ORIGINAL	CARGO
593526	235654

B+ 14.5, **B+ thread** M8, **O.D.** 114.5

AS ARC3031

ORIGINAL	CARGO
593415	231098

I.D. 137

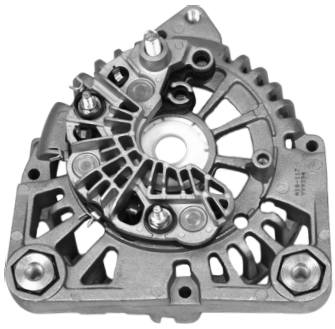

AS ARC3032

ORIGINAL	CARGO
593662	235465

Diode Amp. 110

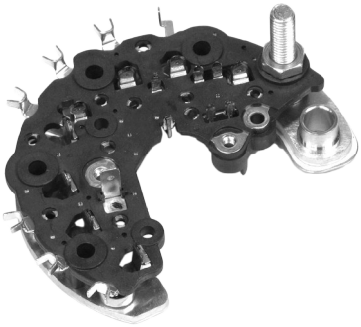

AS ARC3033

B+ 43, **B+ thread** M8, **O.D.** 107
8 DIODES + DIODE TRIO

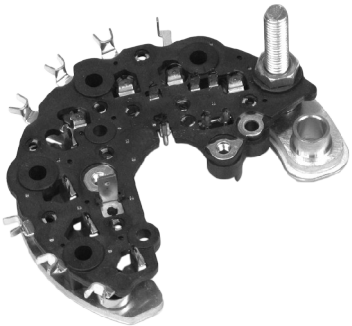

AS ARC3034

B+ 49, **B+ thread** M8, **O.D.** 107
8 DIODES + DIODE TRIO

AS ARC3035

ORIGINAL	TRANSPO
592848	IPR848

6 DIODES + DIODE TRIO

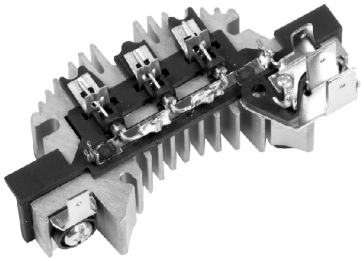

AS ARC3036

ORIGINAL	TRANSPO	CARGO
NB119	MER108	131566

O.D. 101.5, **Mounting dist.** 53

ALTERNATOR RECTIFIERS
VALEO

AS ARC3037

B+ 39, **B+ thread** M8/M6,
6 DIODES / WITHOUT DIODE TRIO

AS ARC3038

ORIGINAL	CARGO
593397	231101

I.D. 129

AS ARC3039

ORIGINAL	CARGO
593463	235521

B+ 14.5, **B+ thread** M8

AS ARC3040

ORIGINAL	CARGO
593526	235654

B+ 14.5, **B+ thread** M8, **O.D.** 114.5

AS ARC3041

CARGO
239019

for SG15S030

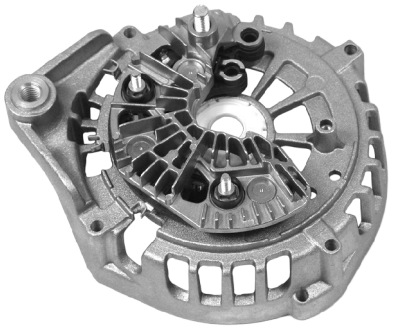

AS ARC3042

for SG15S032

AS ARC3043

B+ 49, **B+ thread** M8, **O.D.** 107
6 DIODES + DIODE TRIO

ALTERNATOR RECTIFIERS
MAGNETI MARELLI/LUCAS

AS ARC4001

ORIGINAL	TRANSPO	CARGO
21220361	IX700	131693

O.D. 102.5

AS ARC4002

ORIGINAL	TRANSPO	CARGO
UBB138	ILR566	131304

B+ 36.5, **B+ thread** M6, **D+** 31.5,
D+ thread M5, **O.D.** 112, **I.D.** 47.5,
Mounting dist. 75

AS ARC4003

ORIGINAL	TRANSPO	CARGO
UBB136	ILR567	132720

B+ 47.5, **B+ thread** M6, **D+** 24,
D+ thread M5, **O.D.** 111.5

AS ARC4004

ORIGINAL	TRANSPO	CARGO
84469	ILR568	132721

B+ 36, **B+ thread** M6, **D+** 35,
D+ thread M5, **O.D.** 112.5, **I.D.** 48,
Mounting dist. 71.5

AS ARC4005

ORIGINAL	TRANSPO	CARGO
84456	ILR570	132718

B+ 41, **B+ thread** M6, **D+** 24.5,
D+ thread M5, **O.D.** 111.5

AS ARC4006

ORIGINAL	TRANSPO	CARGO
84976	ILR576	136324

B+ 47, **B+ thread** M6, **D+** 28,
D+ thread M6, **O.D.** 112, **I.D.** 50.5

AS ARC4007

ORIGINAL	TRANSPO	CARGO
63623701	IXR634	138800

Diode Amp. 120, **B+** 30.5, **B+ thread** M8,
O.D. 122.5, **Mounting dist.** 80

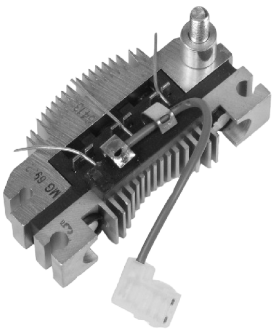

AS ARC4008

ORIGINAL	TRANSPO	CARGO
63621501	IXR692	130650

Diode Amp. 35, **B+** 11.5, **B+ thread** M6,
O.D. 83.5, **Mounting dist.** 75, **Thick** 17.50 mm.

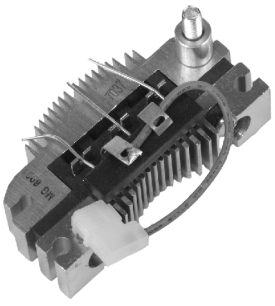

AS ARC4009

ORIGINAL	TRANSPO	CARGO
63621601	IXR693	131505

Diode Amp. 35, **B+** 11.5, **B+ thread** M6,
O.D. 83.5, **Mounting dist.** 75, **Thick** 19.50 mm

ALTERNATOR RECTIFIERS
MAGNETI MARELLI/LUCAS

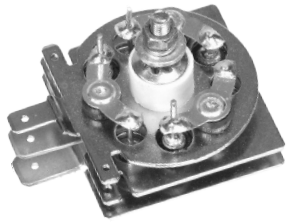

AS ARC4010

ORIGINAL	TRANSPO	CARGO
83166	ILR166	130643

AS ARC4011

ORIGINAL	TRANSPO	CARGO
84574	ILR569	138808

B+ 28, **B+ thread** M6, **D+** 29,
D+ thread M5, **O.D.** 111.5, **I.D.** 47.5,
Mounting dist. 80

AS ARC4012

ORIGINAL	TRANSPO	CARGO
83610231	IXR542	136740

B+ 8, **B+ thread** M6, **O.D.** 104,
Mounting dist. 65

AS ARC4013

ORIGINAL	TRANSPO	CARGO
63624301	IXR719	138801

Diode Amp. 50, **B+** 21.5, **B+ thread** M6,
O.D. 121.5, **Mounting dist.** 85

AS ARC4014

ORIGINAL	TRANSPO	CARGO
RDD33	IXR633	136423

B+ 36, **B+ thread** M8, **O.D.** 107, **I.D.** 37,
Mounting dist. 85

AS ARC4015

ORIGINAL	TRANSPO	CARGO
63623602	IXR726	138792

B+ 22.5, **B+ thread** M6, **O.D.** 122.5,
Mounting dist. 80

AS ARC4016

ORIGINAL	TRANSPO	CARGO
63624201	IXR642	138377

Diode Amp. 50, **B+** 34.5, **B+ thread** M8,
O.D. 122, **Mounting dist.** 85

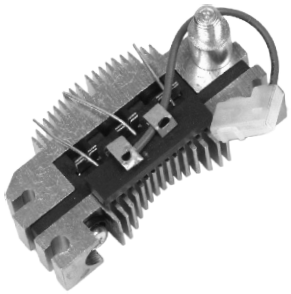

AS ARC4017

ORIGINAL	TRANSPO	CARGO
63622901	IXR704	139218

B+ 10.5, **B+ thread** M8, **O.D.** 83.5,
Mounting dist. 71.5

AS ARC4018

ORIGINAL	CARGO
63625002	231025

B+ 37, **B+ thread** M8, **O.D.** 104.5,
Mounting dist. 85

ALTERNATOR RECTIFIERS
MAGNETI MARELLI/LUCAS

AS ARC4019

ORIGINAL	CARGO
63625003	231026

B+ 30**, B+ thread** M6**, O.D.** 107**,**
Mounting dist. 85

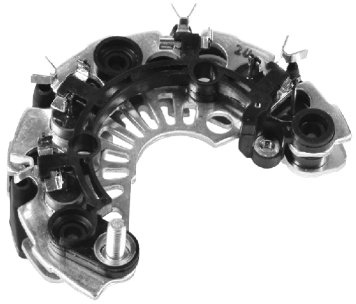

AS ARC4020

ORIGINAL	CARGO
63626002	233792

B+ 16, **B+ thread** M6, **O.D.** 108,
Mounting dist. 85

AS ARC4021

Diodes: 6-50A Avalanche, **O.D.** 121,
M8×50mm Battery Post
Without trio

AS ARC4022

MOBILETRON	CARGO
RI-34	239982

Diode Amp. 50, **O.D.** 120.81

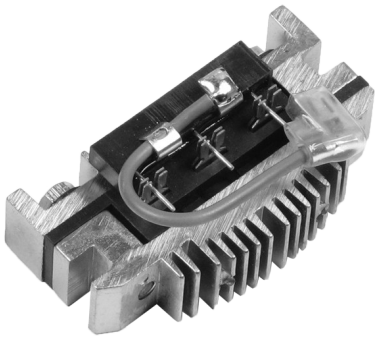

AS ARC4023

ORIGINAL	TRANSPO	CARGO
64826011	IXR691	130650

Diode Amp. 35 **O.D.** 74, **Diodes** 6

ALTERNATOR RECTIFIERS
MITSUBISHI

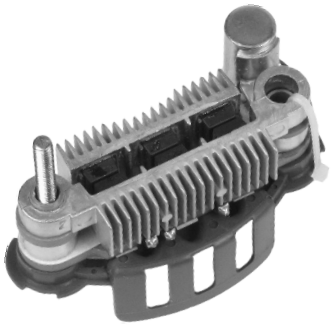

AS ARC5001

ORIGINAL	TRANSPO	CARGO
A860T22770	IMR6540	132789

B+ 22.5, **B+ thread** M6, **O.D.** 85.5,
Mounting dist. 65

AS ARC5002

ORIGINAL	TRANSPO	CARGO
A860T11970	IMR6542	136980

B+ 21.5, **B+ thread** M5, **O.D.** 86,
Mounting dist. 65

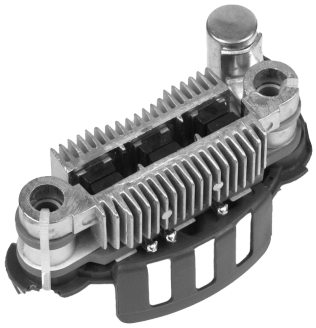

AS ARC5003

ORIGINAL	TRANSPO	CARGO
A860T16770	IMR6548	132791

B+ thread M5, **O.D.** 84,
Mounting dist. 65

AS ARC5004

ORIGINAL	TRANSPO	CARGO
A860T17970	IMR7544, IMR7546	132040

B+ 22, **B+ thread** M5, **O.D.** 96,
Mounting dist. 75

AS ARC5006

ORIGINAL	TRANSPO	CARGO
A860T17270	IMR7548	132467

Diode Amp. 70, **B+ thread** M5, **O.D.** 95.5,
Mounting dist. 75

AS ARC5007

ORIGINAL	TRANSPO	CARGO
A860T17770	IMR7550	133265

B+ thread M5, **O.D.** 96.5,
Mounting dist. 75

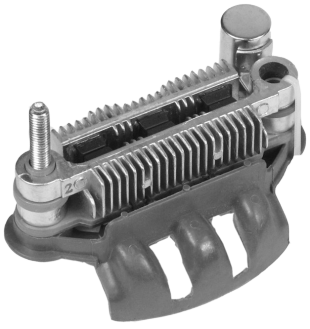

AS ARC5008

ORIGINAL	TRANSPO	CARGO
A860T27170	IMR7556	132469

B+ 22.5, **B+ thread** M6, **O.D.** 96.5,
Mounting dist. 75

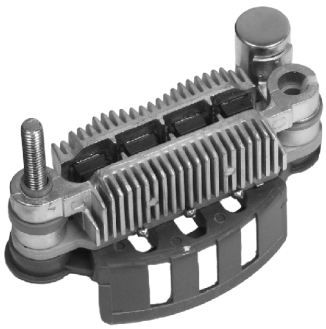

AS ARC5009

TRANSPO
IMR7558

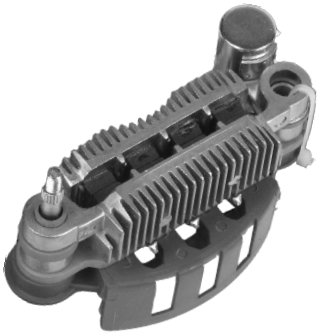

AS ARC5010

ORIGINAL	TRANSPO	CARGO
A860T32570	IMR7562	134027

B+ 17, **B+ thread** M5, **O.D.** 96.5,
Mounting dist. 75

ALTERNATOR RECTIFIERS
MITSUBISHI

AS ARC5011

ORIGINAL	TRANSPO	CARGO
A860T22370	IMR7564	132468

B+ 44, **B+ thread** M6, **O.D.** 90.5,
Mounting dist. 75

AS ARC5012

ORIGINAL	TRANSPO	CARGO
A860T27070	IMR7572	135247

B+ 17.5, **B+ thread** M5, **O.D.** 96.65,
Mounting dist. 75

AS ARC5013

ORIGINAL	TRANSPO	CARGO
A860X20099	IMR7586	136733

B+ 22.5, **B+ thread** M6, **O.D.** 97.5,
Mounting dist. 75

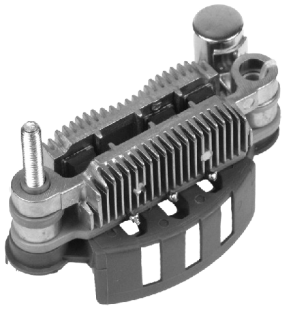

AS ARC5014

ORIGINAL	TRANSPO	CARGO
A860T30370	IMR7596	135215

B+ 23, **B+ thread** M6, **O.D.** 96.5,
Mounting dist. 75

AS ARC5015

ORIGINAL	TRANSPO	CARGO
A860T08470	IMR8011	131543

B+ thread M5, **O.D.** 92.5,
Mounting dist. 80

AS ARC5016

ORIGINAL	TRANSPO	CARGO
A860T08270	IMR8041	132130

Diode Amp. 50, **B+** 39, **B+ thread** M5,
O.D. 92.5, **Mounting dist.** 80

AS ARC5017

ORIGINAL	TRANSPO	CARGO
A860T06070	IMR8043	131221

O.D. 94, **Mounting dist.** 80

AS ARC5018

ORIGINAL	TRANSPO	CARGO
A860T10770	IMR8045	131542

B+ thread M5, **O.D.** 92.5,
Mounting dist. 80

AS ARC5019

ORIGINAL	TRANSPO	CARGO
A860T14570	IMR8047	136726

B+ 40, **B+ thread** M5, **O.D.** 92.5,
Mounting dist. 80

ALTERNATOR RECTIFIERS
MITSUBISHI

AS ARC5020

ORIGINAL	TRANSPO	CARGO
A860T03970	IMR8511	130833

O.D. 98.5, **Mounting dist.** 85

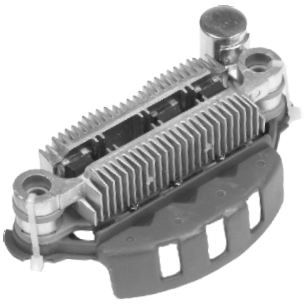

AS ARC5021

ORIGINAL	TRANSPO	CARGO
A860T28670	IMR8540	134297

B+ 44.5, **B+ thread** M6, **O.D.** 100.5,
Mounting dist. 85

AS ARC5022

ORIGINAL	TRANSPO	CARGO
A860T08370	IMR8541	131545

Mounting dist. 85

AS ARC5023

	TRANSPO	CARGO
	IMR8542	233511

B+ 23, **B+ thread** M6, **O.D.** 106.5,
Mounting dist. 85

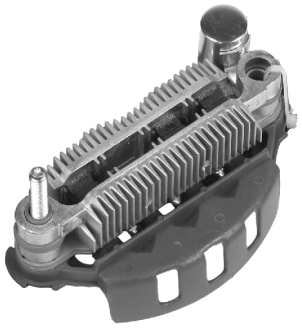

AS ARC5024

ORIGINAL	TRANSPO	CARGO
A860T31370	IMR8544	135041

B+ 24, **B+ thread** M6, **O.D.** 107.5,
Mounting dist. 85

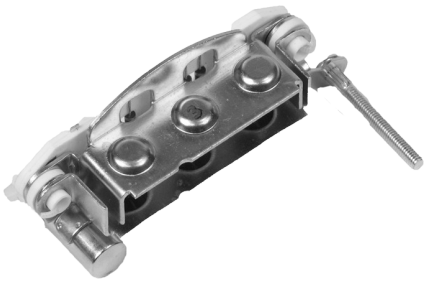

AS ARC5025

ORIGINAL	TRANSPO	CARGO
A860T08770	IMR8545	132463

B+ 40, **B+ thread** M5, **O.D.** 98,
Mounting dist. 85

AS ARC5026

ORIGINAL	TRANSPO
A860T34070	IMR8546

B+ 24, **B+ thread** M6, **O.D.** 107.5,
Mounting dist. 85

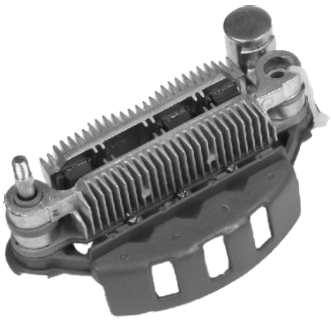

AS ARC5027

ORIGINAL	TRANSPO	CARGO
A860T38270	IMR8548	136977

B+ 17.5, **B+ thread** M5, **O.D.** 106.5,
Mounting dist. 85

AS ARC5028

ORIGINAL	TRANSPO	CARGO
A86T57870	IMR8566	138873

B+ 27, **B+ thread** M8, **O.D.** 106.5,
Mounting dist. 85

ALTERNATOR RECTIFIERS
MITSUBISHI

AS ARC5029

ORIGINAL	TRANSPO	CARGO
E9PZ-10304A	IMR8570	233746

O.D. 106.5, **Mounting dist.** 85

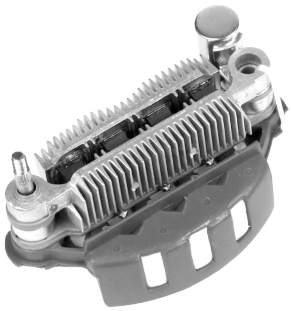

AS ARC5030

ORIGINAL	TRANSPO	CARGO
A860T30170	IMR8572	135249

B+ 17, **B+ thread** M5, **O.D.** 107, **Mounting dist.** 85

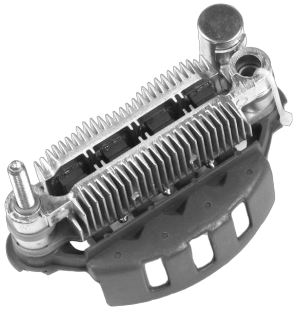

AS ARC5031

ORIGINAL	TRANSPO	CARGO
A860T23270	IMR8574	135042

B+ 22, **B+ thread** M6, **O.D.** 106.5, **Mounting dist.** 85

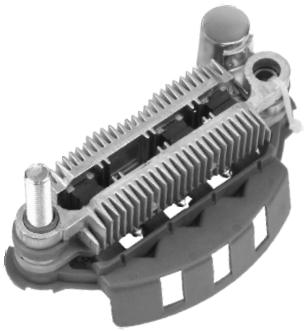

AS ARC5032

	TRANSPO	CARGO
	IMR8580, IMR8582	232628

B+ 29, **B+ thread** M8, **O.D.** 106.5, **Mounting dist.** 85

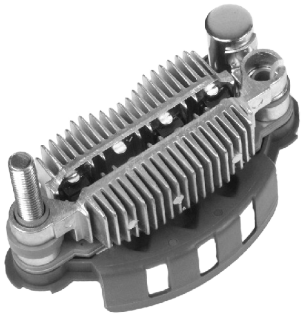

AS ARC5034

ORIGINAL	TRANSPO	CARGO
A860T42670	IMR8588	137849

B+ 27.5, **B+ thread** M8, **O.D.** 106, **Mounting dist.** 85

AS ARC5035

ORIGINAL	TRANSPO	CARGO
A860T38770	IMR8590	136979

B+ 22, **B+ thread** M6, **O.D.** 105.5, **Mounting dist.** 85

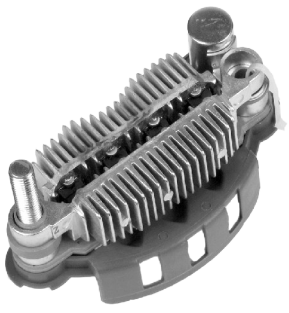

AS ARC5036

ORIGINAL	TRANSPO	CARGO
A860X42770	IMR8594	137849

B+ 27.5, **B+ thread** M8, **O.D.** 106, **Mounting dist.** 85

AS ARC5037

ORIGINAL	TRANSPO	CARGO
A860T35270	IMR10040	135252

B+ 23.5, **B+ thread** M6, **O.D.** 121.5, **Mounting dist.** 100

AS ARC5038

ORIGINAL	TRANSPO	CARGO
A860T23070	IMR10042	132793

B+ thread M5, **O.D.** 122.5, **Mounting dist.** 100

ALTERNATOR RECTIFIERS
MITSUBISHI

AS ARC5039

ORIGINAL	TRANSPO	CARGO
A860T30170	IMR10044	135229

B+ 17.5, **B+ thread** M5, **O.D.** 121.5,
Mounting dist. 100

AS ARC5040

ORIGINAL	TRANSPO	CARGO
A860T36070	IMR10048	139269

B+ 20.5, **B+ thread** M6, **O.D.** 122,
Mounting dist. 100

AS ARC5041

ORIGINAL	TRANSPO	CARGO
A860T26070	IMR10050	137486

B+ 23.5, **B+ thread** M6, **O.D.** 120.5,
Mounting dist. 100

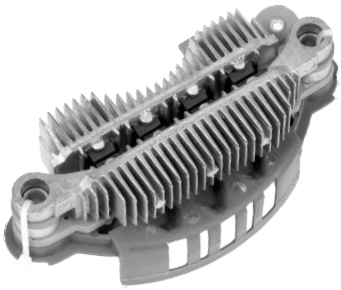

AS ARC5042

TRANSPO	CARGO
IMR10057	231079

B+ 27, **B+ thread** M8, **O.D.** 122,
Mounting dist. 100

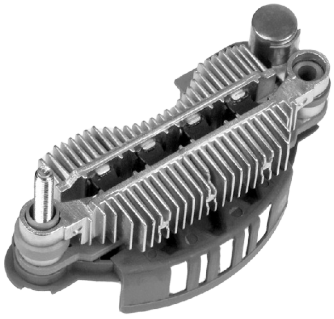

AS ARC5043

ORIGINAL	TRANSPO	CARGO
A860T42070	IMR10062	233518

B+ 17, **B+ thread** M5,
Mounting dist. 100

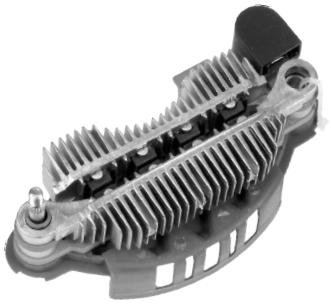

AS ARC5044

ORIGINAL	TRANSPO	CARGO
A860T38670	IMR10064	135882

B+ 17, **B+ thread** M5, **O.D.** 121.5,
Mounting dist. 100

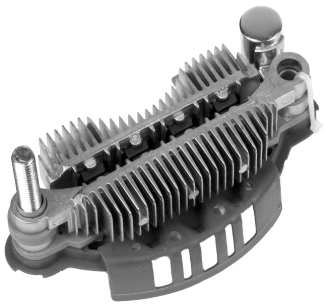

AS ARC5045

ORIGINAL	TRANSPO	CARGO
A860T36770	IMR10066	135901

B+ 28, **B+ thread** M8, **O.D.** 120,
Mounting dist. 100

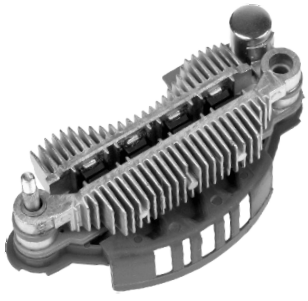

AS ARC5046

ORIGINAL	TRANSPO	CARGO
A860T40270	IMR10068	135882

B+ 17, **B+ thread** M5, **O.D.** 121.5,
Mounting dist. 100

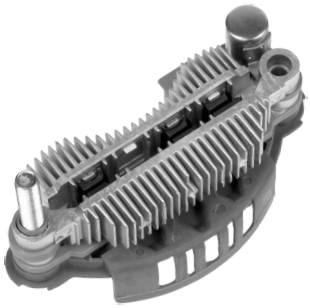

AS ARC5047

ORIGINAL	TRANSPO
A860X52570	IMR10096

ALTERNATOR RECTIFIERS
MITSUBISHI

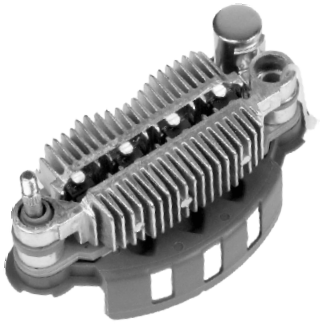

AS ARC5048

ORIGINAL	TRANSPO	CARGO
A860T38970	IMR85100	135948

B+ 17, **B+ thread** M5, **O.D.** 105.5, **Mounting dist.** 85

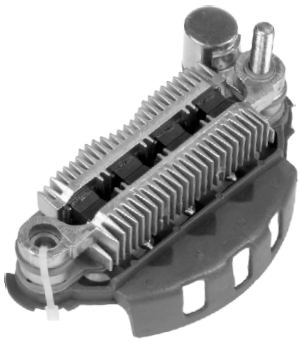

AS ARC5049

TRANSPO	CARGO
IMR85104	230593

Diode Amp. 30, **B+** 22, **B+ thread** M6, **O.D.** 106.5, **Mounting dist.** 85

AS ARC5050

TRANSPO	CARGO
IMR85106	137860

B+ thread M6, **O.D.** 106.5, **Mounting dist.** 85

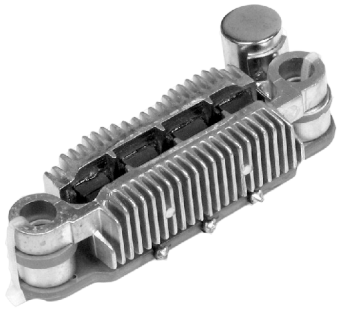

AS ARC5052

ORIGINAL	TRANSPO	CARGO
A860T37070	IMR7582	139195

B+ 21.5, **B+ thread** M6, **O.D.** 97.5, **Mounting dist.** 75

AS ARC5053

ORIGINAL	TRANSPO	CARGO
A860T22570	IMR7542	132466

B+ thread M5, **O.D.** 94.5, **Mounting dist.** 75

AS ARC5054

ORIGINAL	TRANSPO	CARGO
A860T20270	IMR7552	132792

B+ 13.5, **B+ thread** M5, **O.D.** 89, **Mounting dist.** 75

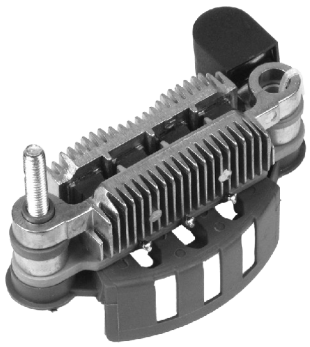

AS ARC5055

ORIGINAL	TRANSPO	CARGO
A860T27270	IMR7560	134295

B+ 22, **B+ thread** M6, **O.D.** 95, **Mounting dist.** 75

AS ARC5056

ORIGINAL	TRANSPO	CARGO
A860T16470	IMR7554	133539

B+ 22, **B+ thread** M6, **O.D.** 95.5, **Mounting dist.** 75

AS ARC5057

ORIGINAL	TRANSPO	CARGO
A860T24570	IMR7570	135248

B+ 22.5, **B+ thread** M5, **O.D.** 96.5, **Mounting dist.** 75

ALTERNATOR RECTIFIERS
MITSUBISHI

AS ARC5058

ORIGINAL	TRANSPO	CARGO
A860X34799	IMR10072	233515

B+ 23, **B+ thread** M6, **O.D.** 122.5,
Mounting dist. 100

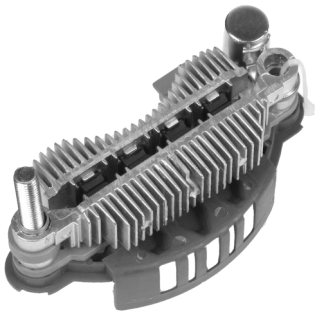

AS ARC5059

ORIGINAL	TRANSPO	CARGO
A860T33970	IMR10060	135900

B+ 27, **B+ thread** M8, **O.D.** 119,
Mounting dist. 100

AS ARC5060

CARGO
235526

B+ M5

for CA1780IR

AS ARC5061

ORIGINAL	TRANSPO	CARGO
A860T58070	IMR85668	230643

B+ 27, **B+ thread** M8, **O.D.** 107.5,
Mounting dist. 85
8 DIODES / WITHOUT DIODE TRIO

ALTERNATOR RECTIFIERS
NIPPONDENSO

AS ARC6001

ORIGINAL	TRANSPO	CARGO
021580-2511	INR401	135250

B+ 25.5, **B+ thread** M6, **O.D.** 100, **Mounting dist.** 65

AS ARC6002

ORIGINAL	TRANSPO	CARGO
021580-3660	INR402	133672

B+ 19, **B+ thread** M6, **O.D.** 103, **I.D.** 30.5, **Mounting dist.** 65

AS ARC6003

ORIGINAL	TRANSPO	CARGO
021580-3640	INR403	135417

B+ 26.5, **B+ thread** M6, **O.D.** 103, **Mounting dist.** 65

AS ARC6004

ORIGINAL	TRANSPO	CARGO
021580-3110	INR718	134306

B+ 32.5 **B+ thread** M6, **O.D.** 83, **I.D.** 28.5

AS ARC6005

ORIGINAL	TRANSPO	CARGO
021580-2160	INR720	132082

B+ 23, **B+ thread** M6, **O.D.** 100.00, **I.D.** 27.5, **Mounting dist.** 65

AS ARC6006

ORIGINAL	TRANSPO	CARGO
021580-2950	INR722	135043

Diode Amp. 70, **B+** 43, **B+ thread** M8, **O.D.** 107, **I.D.** 29.5, **Mounting dist.** 65

AS ARC6007

ORIGINAL	TRANSPO	CARGO
021580-3080	INR723	134306

B+ 32.5 **B+ thread** M6, **O.D.** 83, **I.D.** 28.5

AS ARC6008

ORIGINAL	TRANSPO	CARGO
021580-2260	INR725	132541

B+ 43, **B+ thread** M6, **O.D.** 90, **I.D.** 28.5, **Mounting dist.** 65

AS ARC6009

ORIGINAL	TRANSPO	CARGO
021580-2340	INR726	135258

B+ 32.5, **B+ thread** M6, **O.D.** 90, **Mounting dist.** 65

ALTERNATOR RECTIFIERS
NIPPONDENSO

AS ARC6010

ORIGINAL	TRANSPO	CARGO
021580-4820	INR728, INR734	135416

B+ 27.5, **B+ thread** M6, **O.D.** 113, **Mounting dist.** 65

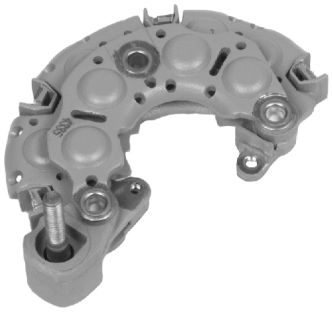

AS ARC6011

ORIGINAL	TRANSPO	CARGO
02158-3640	INR729	135417

B+ 26.5, **B+ thread** M6, **O.D.** 103, **Mounting dist.** 65

AS ARC6012

ORIGINAL	TRANSPO	CARGO
021580-3830	INR731	133672

B+ 19, **B+ thread** M6, **O.D.** 103, **I.D.** 30.5, **Mounting dist.** 65

AS ARC6013

ORIGINAL	TRANSPO	CARGO
021580-4100	INR732	137874

B+ 43.5, **B+ thread** M8, **O.D.** 113, **Mounting dist.** 65

AS ARC6014

TRANSPO	CARGO
INR733	137874

B+ 43.5, **B+ thread** M8, **O.D.** 113, **Mounting dist.** 65

AS ARC6016

ORIGINAL	TRANSPO	CARGO
021580-3850	INR735	137671

Diode Amp. 50, **O.D.** 113, **I.D.** 24.5

AS ARC6017

ORIGINAL	TRANSPO	CARGO
021580-4250	INR736	233246

B+ 38, **B+ thread** M8, **O.D.** 113, **I.D.** 25, **Mounting dist.** 65

AS ARC6018

ORIGINAL	TRANSPO	CARGO
021580-4850	INR739	136741

Diode Amp. 70, **O.D.** 103

AS ARC6019

TRANSPO	CARGO
INR431	237613

B+ 14, **B+ thread** M8

ALTERNATOR RECTIFIERS
NIPPONDENSO

AS ARC6020

TRANSPO	CARGO
INR437	237607

Diode Amp. 50, **B+** 15, **B+ thread** M8,
O.D. 117, **I.D.** 29.5

AS ARC6021

MOBILETRON	TRANSPO
RN-29	INR421

Diodes: 12

AS ARC6022

TRANSPO
INR432

B+ thread M8, **O.D.** 117

for 104210-3732

AS ARC6023

ORIGINAL	TRANSPO	CARGO
021580-3130	INR724	132540

Diode Amp. 70, **O.D.** 90.00
w/o Diode Trio
with Terminal W.

AS ARC6024

MOBILETRON	TRANSPO
RN-34	INR422

Diode Amp. 50, **B+ thread** M6,
O.D. 117, **I.D.** 29.5

ALTERNATOR RECTIFIERS
OTHER

AS ARC9001

TRANSPO	CARGO
FR1083	130517

B+ 15.5, **B+ thread** M6, **D+** 17,
D+ thread M5, **O.D.** 119.5, **I.D.** 68.5,
Mounting dist. 85

AS ARC9002

ORIGINAL	TRANSPO	CARGO
D6AZ10304A	FR1040, FR1046	131421

B+ 15.5, **B+ thread** M6, **D+** 17,
D+ thread M5, **O.D.** 119.5, **I.D.** 68.5,
Mounting dist. 85

AS ARC9005

ORIGINAL	TRANSPO	CARGO
D2OZ-10304A	FR1270	131422

B+ 17.5, **B+ thread** M6, **D+** 19,
D+ thread M5, **O.D.** 139.5, **I.D.** 48.5,
Mounting dist. 100

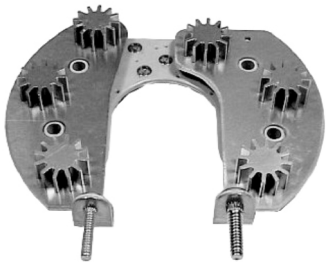

AS ARC9006

ORIGINAL	TRANSPO	CARGO
D3VY-10304A	FR1280	131430

Diode Amp. 50, **B+** 19, **B+ thread** M6,
D+ 19, **D+ thread** M5, **O.D.** 139.5, **I.D.** 48.5,
Mounting dist. 100

AS ARC9007

ORIGINAL	TRANSPO	CARGO
D4VY10304A	FR1290, FR1292	131430

Diode Amp. 50, **B+** 19, **B+ thread** M6,
D+ 19, **D+ thread** M5, **O.D.** 139.5, **I.D.** 48.5,
Mounting dist. 100

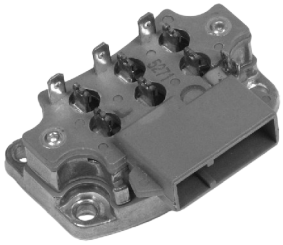

AS ARC9009

ORIGINAL	TRANSPO	CARGO
E43Z-10304A	FR192	137048

Diode Amp. 50, **O.D.** 65.5, **Mounting dist.** 53

AS ARC9010

ORIGINAL	TRANSPO	CARGO
F5AZ-10304-B	FR201	136209

Diode Amp. 40, **B+** 11.5, **B+ thread** M6,
O.D. 133

AS ARC9011

ORIGINAL	TRANSPO	CARGO
F5AZ-10304-AA	FR202	136210

Diode Amp. 50, **B+** 11.5, **B+ thread** M6,
O.D. 146

AS ARC9012

TRANSPO	CARGO
FR300	139668

B+ 11, **B+ thread** M6, **O.D.** 133, **I.D.** 40.5

ALTERNATOR RECTIFIERS
OTHER

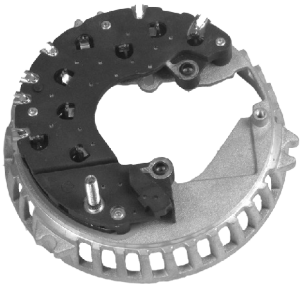

AS ARC9013

ORIGINAL	TRANSPO	CARGO
F8WU10A366AAIP	FR600	230842

Diode Amp. 50, **B+** 24, **B+ thread** M6, **O.D.** 136, **Mounting dist.** 53

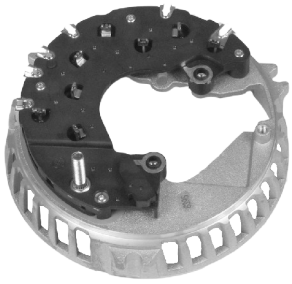

AS ARC9014

ORIGINAL	TRANSPO	CARGO
F8RU10A366CAIP	FR601	233208

Diode Amp. 105, **B+** 12.5, **B+ thread** M6, **O.D.** 136, **Mounting dist.** 53

AS ARC9015

ORIGINAL	TRANSPO	CARGO
F8AU10A366AAIP	FR602	230870

Diode Amp. 50, **B+** 11, **B+ thread** M6, **O.D.** 149, **Mounting dist.** 53

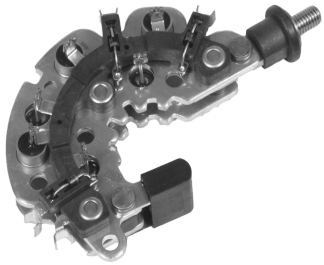

AS ARC9016

ORIGINAL	CARGO
IAT08790	234307

B+ 11.5, **B+ thread** M8, **O.D.** 101, **Mounting dist.** 75

AS ARC9017

ORIGINAL	DELCO alternator
Daewoo Matiz	repl. 219170

AS ARC9018

CARGO
138205

Diode Amp. 90, **B+** 22.5, **B+ thread** M6, **O.D.** 105.5, **Mounting dist.** 85

AS ARC9019

CARGO	PAL MAGNETON
134977	0135240

B+ 18.5, **B+ thread** M6, **O.D.** 114

AS ARC9020

MIDO	TRANSPO
31620A78B00000	IYR751

AS ARC9021

CARGO
235019

Diode Amp. 50, **B+** 11, **B+ thread** M6, **O.D.** 112.5, **Mounting dist.** 65

ALTERNATOR RECTIFIERS
OTHER

AS ARC9022

ORIGINAL **CARGO**
0138801 **234596**

O.D. 114, **I.D.** 40

AS ARC9023

ORIGINAL **CARGO**
16.903.314 **231050**

Diodes: 8-35A Avalanche
With M8×39.5mm Battery Post
With M5×28.5mm Trio Post
With Trio,Capacitor

AS ARC9024

ORIGINAL **CARGO**
16.903.507 **231472**

Diodes: 8-35 A Avalanche
With M8×54mm Battery Post
With M5×32mm Trio Post
With M5×32mm W Post, **With** Trio, Capacitor

AS ARC9025

Diodes: 8-35A Avalanche
With M6×54mm Battery Post
With M5×32mm Trio Post
With M5×32mm W Post
With Trio, Capacitor

AS ARC9026

Diodes: 8-35A Avalanche
With M8×35.5mm Battery Post
With M4×21.1mm Trio Post
With M5×22.1mm W Post
With Trio, Capacitor

AS ARC9027

Diodes: 6-35 A Avalanche
With M8×54mm Battery Post
With M5×32mm Trio Post
With Trio, Capacitor

ALTERNATOR DIODE

AS ARD9001

CARGO 130937 **A.I.M** AD-0713D **Diode: 1.0 Ampere 200V, 0.1mA**
TRANSPO 8010

AS ARD9002

RENARD 7500 **A.I.M** AD-0713D1.5 **Diode: 1.5 Ampere 200V, 0.5mA**
TRANSPO 8015

AS ARD9003

RENARD 7502 **WAI** 32-8908 **Diode: 2.5 Ampere 200V, 0.5mA**
TRANSPO 8025

AS ARD9004

CARGO 131294 **DELCO** 1964187 **Diode: 3.0 Ampere 200V, 0.5mA**
TRANSPO 8030

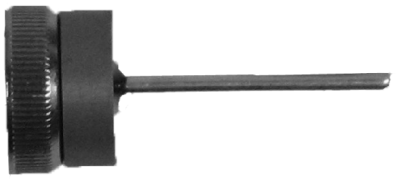

AS ARD9005

CARGO 130912 **HUCO** 13 9407 **Diode + 35 Ampere 330V, 0.1mA Dim(mm): 12.77(1/2")OD Lead(mm): 1.4Dia×23L**
TRANSPO 8234

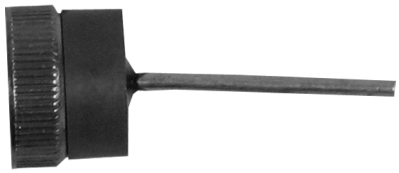

AS ARD9006

WAI 32-200 **Diode + 50 Ampere 330V, 0.1mA Dim(mm): 12.77(1/2")OD Lead(mm): 1.4Dia×23L**
TRANSPO 8252

AS ARD9007

Diode + 35A Avalanche 34-45V, 0.5mA Dim(mm): 12.77(1/2")OD Lead(mm): 1.4Dia×23L

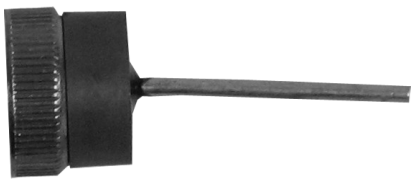

AS ARD9008

WAGNER W04X-44 **Diode + 50A Avalanche 34-45V, 0.5mA Dim(mm): 12.77(1/2")OD Lead(mm): 1.4Dia×23L**
TRANSPO 8466

AS ARD9009

WAGNER W04X-38 **WIEGEL** DIOUN800017 **Diode + 35A Avalanche 19-32V, 0.5mA Dim(mm): 12.77(1/2")OD Lead(mm): 1.4Dia×23L**
TRANSPO 8440

ALTERNATOR DIODE

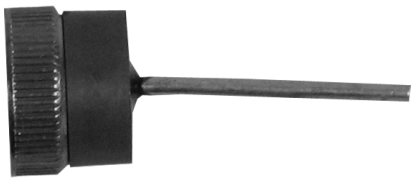

AS ARD9010

WAGNER
W04X-40
TRANSPO
8454
WAI
32-9103
Diode +
50A Avalanche
19-32V, 0.5mA
Dim(mm): 12.77(1/2")OD
Lead(mm): 1.4Dia×23L

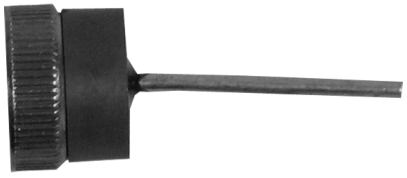

AS ARD9011

Diode +
50A Avalanche
19-32V, 0.5mA
Dim(mm): 12.87(1/2")OD
Lead(mm): 1.4Dia×23L

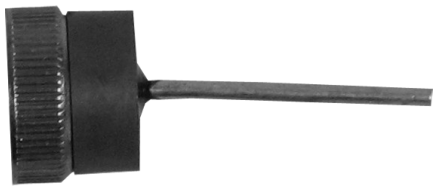

AS ARD9012

Diode +
60A Avalanche
19-32V, 0.5mA
Dim(mm): 12.77(1/2")OD
Lead(mm): 1.4Dia×23L

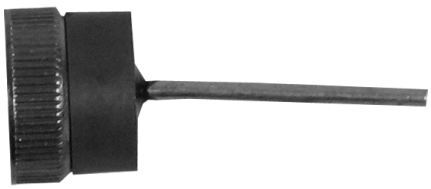

AS ARD9013

Diode +
60A Avalanche
19-32V, 0.5mA
Dim(mm): 12.87(1/2")OD
Lead(mm): 1.4Dia×23L

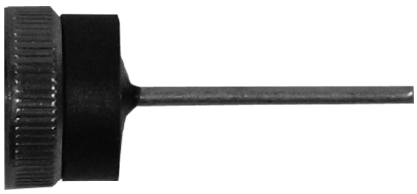

AS ARD9014

BOSCH
0270100358
TRANSPO
8235
HUCO
139406
Diode -
35Ampere,
330V, 0.1mA
Dim(mm): 12.77(1/2")OD
Lead(mm): 1.4Dia×23L

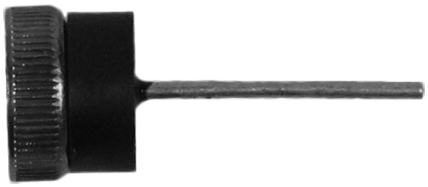

AS ARD9015

WAI
32-201
TRANSPO
8253
Diode -
50Ampere,
330V, 0.1mA
Dim(mm): 12.77(1/2")OD
Lead(mm): 1.4Dia×23L

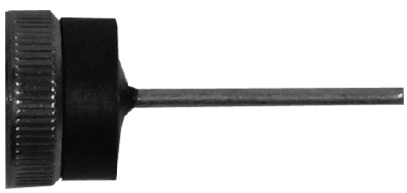

AS ARD9016

Diode -
35A Avalanche
34-45V, 0.5mA
Dim(mm): 12.77(1/2")OD
Lead(mm): 1.4Dia×23L

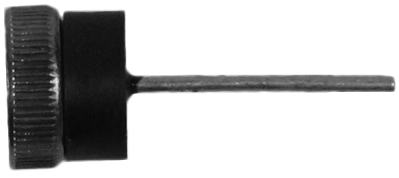

AS ARD9017

WAGNER
W04X-43
TRANSPO
8467
Diode -
50A Avalanche
(34-45V),0.5mA
Dim(mm): 12.77(1/2")OD
Lead(mm): 1.4Dia×23L

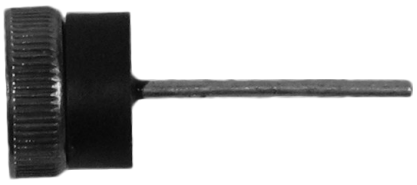

AS ARD9018

WIEGEL
DIOUN800018
TRANSPO
8441
WAGNER
W04X-37
Diode -
35A Avalanche
19-32V, 0.5mA
Dim(mm): 12.77(1/2")OD
Lead(mm): 1.4Dia×23L

ALTERNATOR DIODE

AS ARD9019

WIEGEL **WAGNER**
DIOUN800020 **W04X-39**
TRANSPO
8455

Diode -
50A Avalanche
19-32V, 0.5mA
Dim(mm): 12.77(1/2″)OD
Lead(mm): 1.4Dia×23L

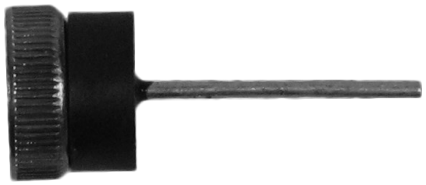

AS ARD9020

Diode -
50A Avalanche
19-32V, 0.5mA
Dim(mm): 12.87(1/2″)OD
Lead(mm): 1.4Dia×23L

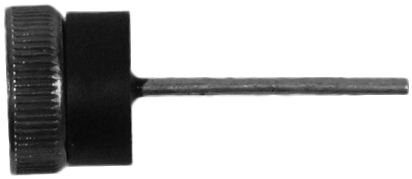

AS ARD9021

Diode -
60A Avalanche
19-32V, 0.5mA
Dim(mm): 12.77(1/2″)OD
Lead(mm): 1.4Dia×23L

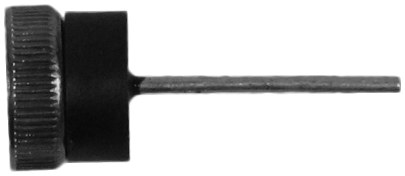

AS ARD9022

Diode -
60A Avalanche
19-32V, 0.5mA
Dim(mm): 12.87(1/2″)OD
Lead(mm): 1.4Dia×23L

AS ARD9023

WIEGEL **WAI**
DIOUN800025 **32-8104**
TRANSPO
8631

Diode -
35Ampere,
330V, 0.05mA
Dim(mm): 11.77 OD
Lead(mm): 1.5Dia×21L

AS ARD9024

Diode -
35Ampere,
330V, 0.05mA
Dim(mm): 11.87 OD
Lead(mm): 1.5Dia×21L

AS ARD9025

Diode -
60Ampere,
330V, 0.05mA
Dim(mm): 11.77 OD
Lead(mm): 1.5Dia×21L

AS ARD9026

Diode -
60Ampere,
330V, 0.05mA
Dim(mm): 11.87 OD
Lead(mm): 1.5Dia×21L

AS ARD9027

WIEGEL **WAI**
DIOUN800029 **32-8108**
TRANSPO
8661

Diode -
60 A Avalanche,
19-32V, 0.05mA
Dim(mm): 11.77 OD
Lead(mm): 1.5Dia×21L

ALTERNATOR DIODE

AS ARD9028

Diode -
60 A Avalanche,
19-32V, 0.05mA
Dim(mm): 11.87 OD
Lead(mm): 1.5Dia×21L

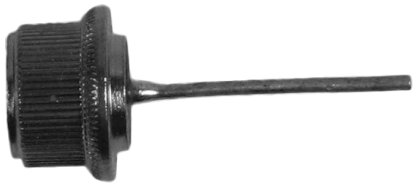

AS ARD9029

Diode -
50Ampere,
330V, 0.05mA
Dim(mm): 12.75 OD
Lead(mm): 1.4Dia×29L

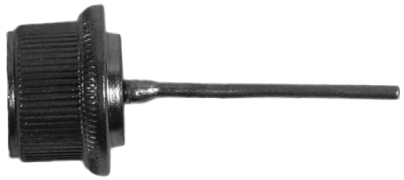

AS ARD9030

Diode -
50Ampere,
330V, 0.05mA
Dim(mm): 12.75 OD
Lead(mm): 1.4Dia×29L

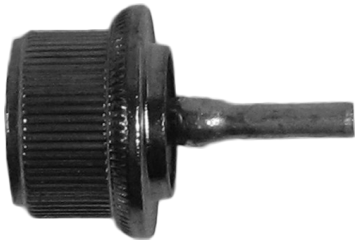

AS ARD9031

Diode +
60Ampere,
330V, 0.05mA
Dim(mm): 12.75 OD
Lead(mm): 2.5Dia×16.2L

AS ARD9032

Diode -
60Ampere,
330V, 0.05mA
Dim(mm): 12.75 OD
Lead(mm): 2.5Dia×16.2L

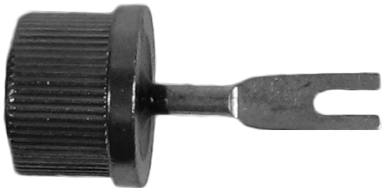

AS ARD9033

Diode +
25Ampere,
330V, 0.05mA
Dim(mm): 11 OD
Lead(mm): Fork, 2mm×18.5L

AS ARD9034

Diode -
25Ampere,
330V, 0.05mA
Dim(mm): 11 OD
Lead(mm): Fork, 2mm×18.5L

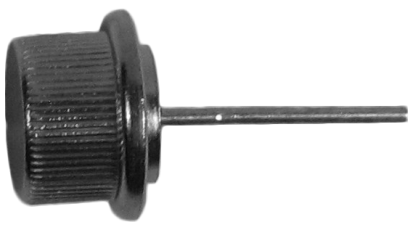

AS ARD9035

MOBILETRON **RENARD**
DD-1013 **7700**
TRANSPO
8724

Diode +
25Ampere,
330V, 0.1mA
Dim(mm): 12.7(1/2")OD
Lead(mm): 1.5Dia×25L

AS ARD9036

MOBILETRON **NAPA**
DD-1012 **AC1N**
TRANSPO
8725

Diode -
25Ampere,
330V, 0.1mA
Dim(mm): 12.7(1/2")OD
Lead(mm): 1.5Dia×25L

ALTERNATOR DIODE

AS ARD9037

MOBILETRON
DD-1015
TRANSPO
8734

Diode +
35Ampere,
330V, 0.1mA
Dim(mm): 12.7 (1/2")OD
Lead(mm): 1.5Dia×25L

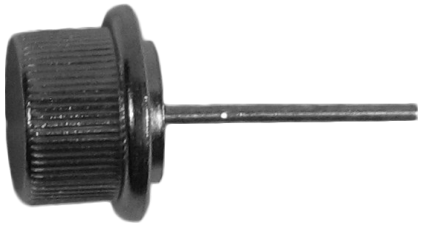

AS ARD9038

MOBILETRON
DD-1014
TRANSPO
8735

Diode -
35Ampere,
330V, 0.1mA
Dim(mm): 12.7(1/2") OD
Lead(mm): 1.5Dia×25L

AS ARD9039

WAGNER
W04X-05
WAI
32-755
TRANSPO
8752

Diode +
50Ampere,
330V, 0.1mA
Dim(mm): 12.7 (1/2")OD
Lead(mm): 2.5Dia×20.8L

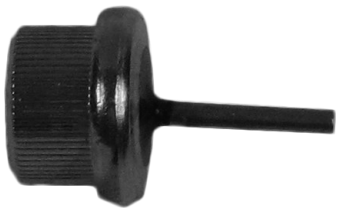

AS ARD9040

WAI
32-754
TRANSPO
8753

Diode -
50Ampere,
330V, 0.1mA
Dim(mm): 12.7 (1/2")OD
Lead(mm): 2.5Dia×20.8L

AS ARD9041

Diode +
25Ampere,
330V, 0.1mA
Dim(mm): 12.7 (1/2")OD
Lead(mm): 1.4 Dia×29.3L

AS ARD9042

Diode -
25Ampere,
330V, 0.1mA
Dim(mm): 12.7 (1/2")OD
Lead(mm): 1.4 Dia×29.3L

AS ARD9043

CHRYSLEY
3000 047 CH4005
TRANSPO
8824
DUBOIS
5003

Diode +
35Ampere,
330V, 0.1mA
Dim(mm): 12.7 (1/2")OD
Lead(mm): 1.4 Dia×29.3L

AS ARD9044

CHRYSLEY
3000 046 CH4004
TRANSPO
8825
DUBOIS
5004

Diode -
35Ampere,
330V, 0.1mA
Dim(mm): 12.7 (1/2")OD
Lead(mm): 1.4 Dia×29.3L

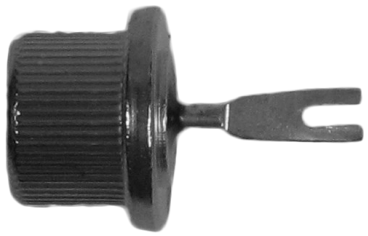

AS ARD9045

CARGO
134495
WAI
32-8101
TRANSPO
8624

Diode +
35Ampere,
330V, 0.1mA
Dim(mm): 13 OD
Lead(mm): 2Dia×18.5L

ALTERNATOR DIODE

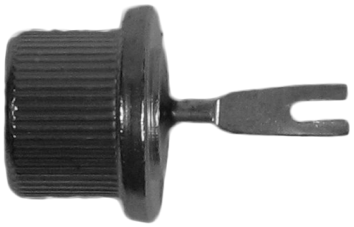

AS ARD9046

CARGO **WAI** **Diode -**
134494 **32-8100** **35Ampere,**
330V, 0.1mA
TRANSPO **Dim(mm): 13 OD**
8625 **Lead(mm): 2Dia×18.5L**

AS ARD9047

Diode +
50Ampere,
330V, 0.1mA
Dim(mm): 12.7 (1/2″)OD
Lead(mm): 35L

AS ARD9048

Diode -
50Ampere,
330V, 0.1mA
Dim(mm): 12.7(1/2″) OD
Lead(mm): 35L

AS ARD9049

Diode +
35Ampere,
330V, 0.1mA
Dim(mm): 12.7 (1/2″)OD
Lead(mm): 35L

AS ARD9050

Diode -
35Ampere,
330V, 0.1mA
Dim(mm): 12.7(1/2″) OD
Lead(mm): 35L

AS ARD9051

Diode +
35Ampere,
330V, 0.1mA
Dim(mm): 12.7 (1/2″)OD
Lead(mm): 17L

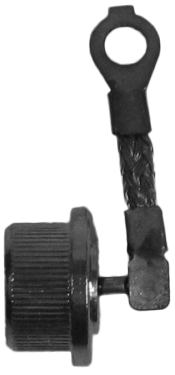

AS ARD9052

Diode -
35Ampere,
330V, 0.1mA
Dim(mm): 12.7 (1/2″)OD
Lead(mm): 17L

AS ARD9053

DELCO **WAI** **Diode +**
1959829 **32-108** **25Ampere,**
330V, 0.1mA
TRANSPO **Dim(mm): 12.75 (1/2″)OD**
8960 **Lead(mm): 30**

AS ARD9054

DELCO **WAI** **Diode -**
1959830 **32-107** **25Ampere,**
330V, 0.1mA
TRANSPO **Dim(mm): 12.75 (1/2″)OD**
8961 **Lead(mm): 30**

ALTERNATOR DIODE

AS ARD9055

Diode +
35Ampere,
330V, 0.1mA
Dim(mm): 12.75(1/2″)OD
Lead(mm): 30L

AS ARD9056

Diode -
35Ampere,
330V, 0.1mA
Dim(mm): 12.75(1/2″)OD
Lead(mm): 30

AS ARD9057

Diode +
35Ampere,
330V, 0.1mA
Dim(mm): 12.7 (1/2″)OD
Lead(mm): 40L

AS ARD9058

Diode -
35Ampere,
330V, 0.1mA
Dim(mm): 12.7(1/2″) OD
Lead(mm): 40L

AS ARD9059

CARGO **WAI**
130672 **32-101**
TRANSPO
8961

Diode +
35Ampere,
330V, 0.1mA
Dim(mm): 12.75 (1/2″)OD
Lead(mm): 30L
Popular for Delco 25SI

AS ARD9060

CARGO **WAI**
133194 **32-102**
TRANSPO
8960

Diode -
35Ampere,
330V, 0.1mA
Dim(mm): 12.75 (1/2″)OD
Lead(mm): 30L
Popular for Delco 25SI

ALTERNATOR REGULATORS
BOSCH

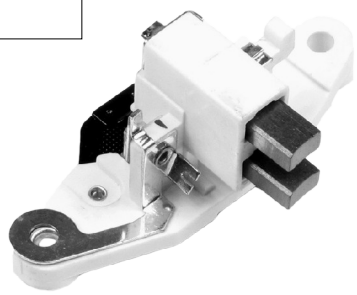

AS ARE0001

ORIGINAL	TRANSPO	CARGO	12 V
1197311090	IB350	130676 133095	

MOBILETRON
VR-B192

AS ARE0002

ORIGINAL	TRANSPO	CARGO	12 V
1197311004	IB352	130958	

MOBILETRON
VR-B195M

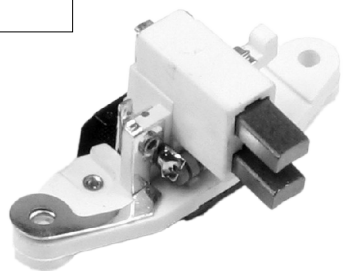

AS ARE0003

ORIGINAL	TRANSPO	CARGO	12 V
1197311022	IB355	132980	

MOBILETRON
VR-B196MH

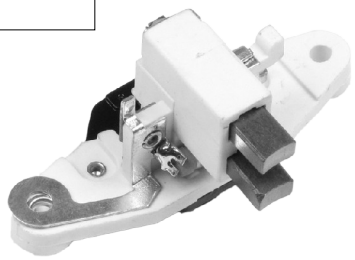

AS ARE0004

ORIGINAL	TRANSPO	CARGO	12 V
1197311018	IB356	133993	

MOBILETRON
VR-B196M

AS ARE0005

ORIGINAL	TRANSPO	CARGO	24 V
1197311300	IB362	132903	

MOBILETRON
VR-B203

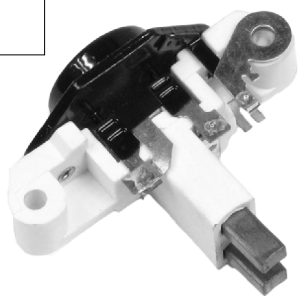

AS ARE0006

ORIGINAL	TRANSPO	CARGO	12 V
1197311528	IB385	134687	

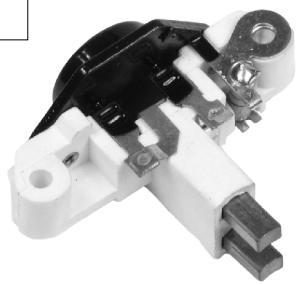

AS ARE0007

ORIGINAL	TRANSPO	CARGO	12 V
1197311211	IB387	134761	

MOBILETRON
VR-B201

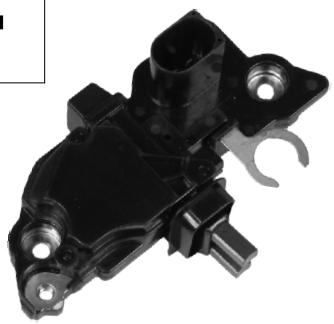

AS ARE0008

ORIGINAL	TRANSPO	CARGO	12 V
F00M145225	IB225	139925	

MOBILETRON
VR-B254

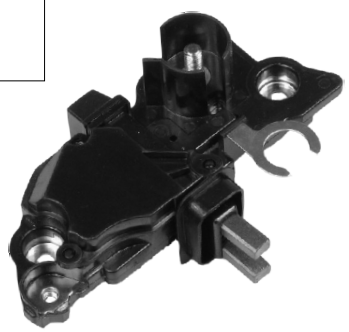

AS ARE0009

ORIGINAL	TRANSPO	CARGO	12 V
F00M145220	IB220	230249	

MOBILETRON
VR-B256

ALTERNATOR REGULATORS
BOSCH

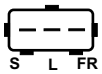

AS ARE0010

ORIGINAL	TRANSPO	CARGO	12 V
1197311545	IB545	138999	

MOBILETRON
VR-B238

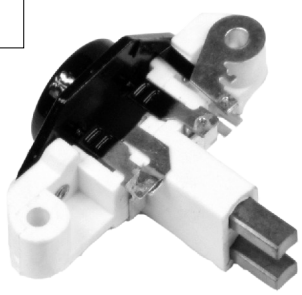

AS ARE0011

ORIGINAL	TRANSPO	CARGO	12 V
1197311548	IB388	137117	

MOBILETRON
VR-B222

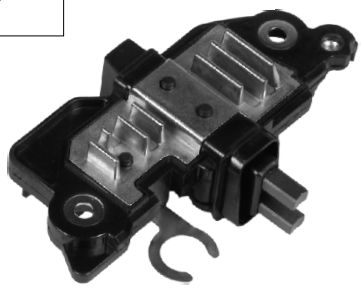

AS ARE0012

ORIGINAL	TRANSPO	CARGO	12 V
F00M145231	IB231	139044	

MOBILETRON
VR-B252

AS ARE0013

ORIGINAL	TRANSPO	CARGO	12 V
F00M145240	IB206	139933	

MOBILETRON
VR-B255

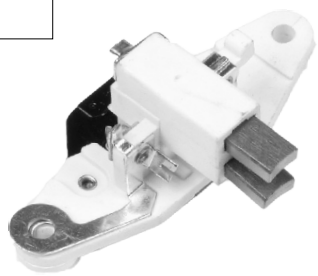

AS ARE0014

ORIGINAL	TRANSPO	CARGO	12 V
1197311028	IB353	132665 135797	

MOBILETRON
VR-B195M

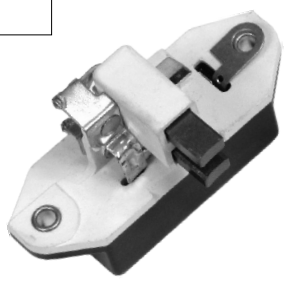

AS ARE0015

ORIGINAL	TRANSPO	CARGO	24 V
0192053001	IB376	130592	

MOBILETRON
VR-B197

AS ARE0016

ORIGINAL	TRANSPO	CARGO	12 V
1197311003	IB354	133378	

MOBILETRON
VR-B196M

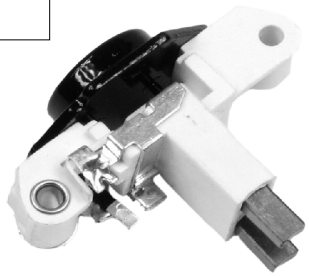

AS ARE0017

ORIGINAL	TRANSPO	CARGO	12 V
1197311512	IB512	138108	

MOBILETRON
VR-B240H

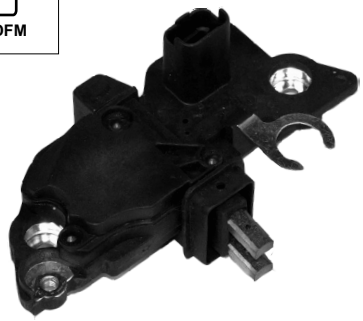

AS ARE0018

ORIGINAL	TRANSPO	CARGO	12 V
F00M145239	IB239	230624	

MOBILETRON
VR-B251

Electric conections - page 4

ALTERNATOR REGULATORS
BOSCH

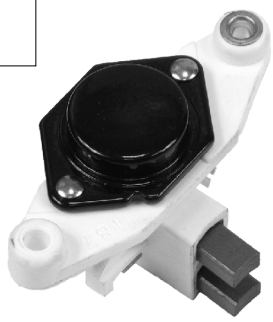

AS ARE0019

ORIGINAL **TRANSPO** **CARGO** 12 V
1197311000 **IB351** **133095**
MOBILETRON
VR-B193M

AS ARE0020

ORIGINAL **TRANSPO** **CARGO** 12 V
1197311001 **IB348** **130676**
MOBILETRON
VR-B193M

AS ARE0021

ORIGINAL **TRANSPO** **CARGO** 12 V
1197311029 **IB360** **132666**
132665
MOBILETRON
VR-B202

AS ARE0022

ORIGINAL **TRANSPO** **CARGO** 24 V
1197311304 **IB363** **135856**
MOBILETRON
VR-B203

AS ARE0023

ORIGINAL **TRANSPO** **CARGO** 24 V
1197311309 **IB364** **138756**
MOBILETRON
VR-B210

D-

AS ARE0024

ORIGINAL **TRANSPO** **CARGO** 24 V
1197311308 **IB365** **136545**

AS ARE0025

TRANSPO **CARGO** 12 V
IB368 **230455**

AS ARE0026

ORIGINAL **TRANSPO** **CARGO** 24 V
1197311310 **IB369** **138292**

AS ARE0027

ORIGINAL **TRANSPO** **CARGO** 24 V
0192053005 **IB374** **130960**
MOBILETRON
VR-B198

ALTERNATOR REGULATORS
BOSCH

AS ARE0028

ORIGINAL	TRANSPO	CARGO	24 V
0192053019	IB380	133781	

MOBILETRON
VR-B198

AS ARE0029

ORIGINAL	TRANSPO	CARGO	12 V
0192052002	IB358	130676	

MOBILETRON
VR-B192

AS ARE0031

ORIGINAL	TRANSPO	CARGO	12 V
1197311047	IB371	130013	

MOBILETRON
VR-B220

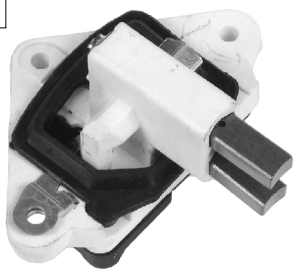

AS ARE0032

ORIGINAL	TRANSPO	CARGO	24 V
0192053003	IB381	131340	

MOBILETRON
VR-B206

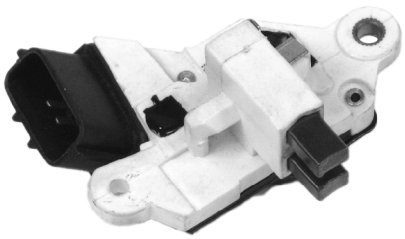

AS ARE0033

ORIGINAL	TRANSPO	12 V
9190041002	IB501	

MOBILETRON
VR-B250

D-

AS ARE0035

ORIGINAL	TRANSPO	CARGO	24 V
9190457003	IB386	137152	

MOBILETRON
VR-B219

AS ARE0037

ORIGINAL	TRANSPO	CARGO	12 V
9191337302	IB399	132737	

MOBILETRON
VR-B207

AS ARE0039

ORIGINAL	TRANSPO	CARGO	12 V
1197311511	IB511	138310	

MOBILETRON
VR-B235

AS ARE0040

ORIGINAL	TRANSPO	CARGO	12 V
F00M145214	IB235	139334	

MOBILETRON
VR-B253

ALTERNATOR REGULATORS
BOSCH

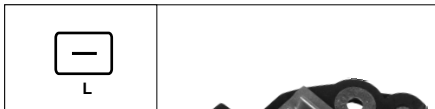

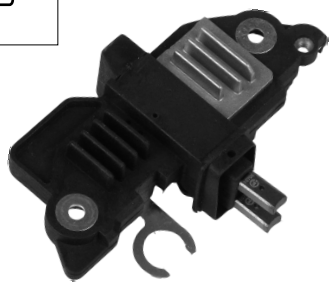

AS ARE0041

ORIGINAL **TRANSPO** **CARGO** 12 V
F00M145229 **IB229** **232927**
MOBILETRON
VR-B221

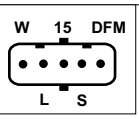

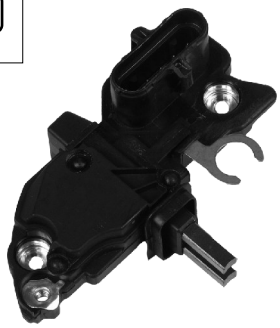

AS ARE0042

ORIGINAL **TRANSPO** **CARGO** 24 V
F00M145307 **IB298** **231523**

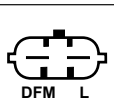

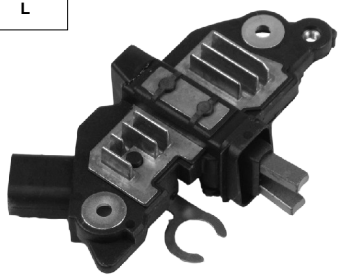

AS ARE0043

ORIGINAL **TRANSPO** **CARGO** 12 V
F00M145228 **IB283** **231716**
F00M145409

AS ARE0044

ORIGINAL **TRANSPO** **CARGO** 12 V
F00M225401 **IB201** **235528**
MOBILETRON
VR-B257
Mercedes watercooled

AS ARE0045

ORIGINAL **TRANSPO** **CARGO** 12 V
F00M145236 **IB236** **233587**
MOBILETRON
VR-B243

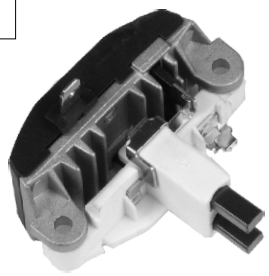

AS ARE0046

ORIGINAL **TRANSPO** **CARGO** 12 V
1197311520 **IB520** **138109**
MOBILETRON
VR-B229

AS ARE0047

ORIGINAL **TRANSPO** **CARGO** 12 V
0192052015 **IB378** **130958**
MOBILETRON
VR-B194

AS ARE0049

ORIGINAL **TRANSPO** **CARGO** 12 V
9190067016 **IB391** **136554**
MOBILETRON
VR-B391

AS ARE0050

ORIGINAL **TRANSPO** **CARGO** 12 V
9190067018 **IB392** **136555**
MOBILETRON
VR-B392

ALTERNATOR REGULATORS
BOSCH

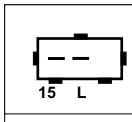

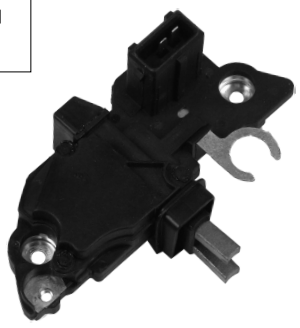

AS ARE0051

ORIGINAL **TRANSPO** **CARGO** 12 V
F00M145251 IB251 235549
MOBILETRON
VR-B360

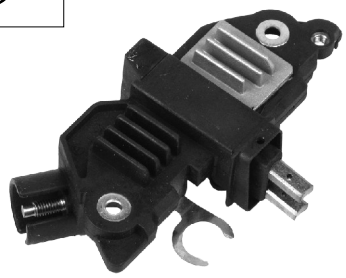

AS ARE0052

ORIGINAL **TRANSPO** **CARGO** 12 V
F00M145252 IB252 232193
MOBILETRON
VR-B263

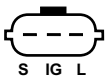

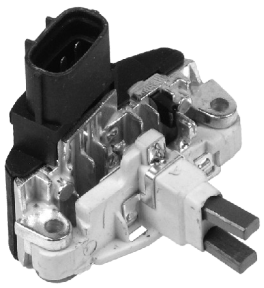

AS ARE0053

ORIGINAL **TRANSPO** **CARGO** 24V
1197311543 IB543 234112
MOBILETRON
VR-B543B

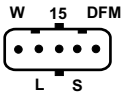

AS ARE0054

ORIGINAL **TRANSPO** **CARGO** 24 V
F00M145297 IB297 233117
MOBILETRON
VR-B268

AS ARE0055

ORIGINAL **TRANSPO** **CARGO** 12 V
F00M255200 IB200 235460
F00M255202
MOBILETRON
VR-B394 **Watercooled BMW**

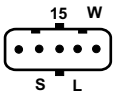

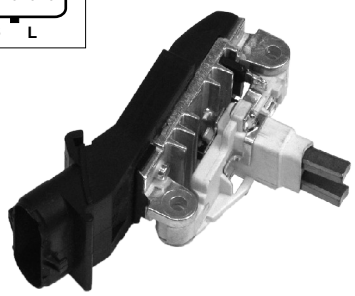

AS ARE0056

ORIGINAL **TRANSPO** **CARGO** 24 V
1197311558 IB558 234522
MOBILETRON
VR-B558B

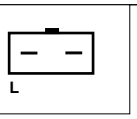

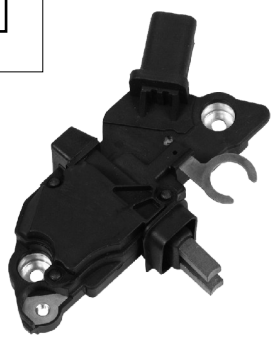

AS ARE0057

ORIGINAL **TRANSPO** **CARGO** 12 V
F00M145286 IB286 234770
MOBILETRON
VR-B270

AS ARE0058

ORIGINAL **TRANSPO** **CARGO** 12 V
F00M145357 IB247 235207
MOBILETRON
VR-B247

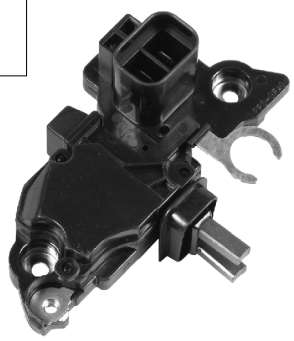

AS ARE0059

ORIGINAL **TRANSPO** **CARGO** 12 V
F00M145207 IB347 231130
F00M145347
MOBILETRON
VR-B267

ALTERNATOR REGULATORS
BOSCH

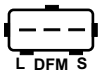

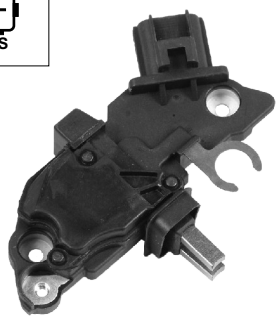

AS ARE0060

ORIGINAL **TRANSPO** **CARGO** 12 V
F00M145255 **IB255** **233508**
MOBILETRON
VR-B262

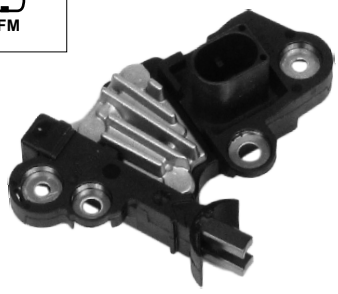

AS ARE0061(BOSCH)

ORIGINAL **TRANSPO** 12 V
F00M346010 **IB6026**
F00M346015
MOBILETRON
VR-B026

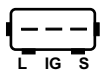

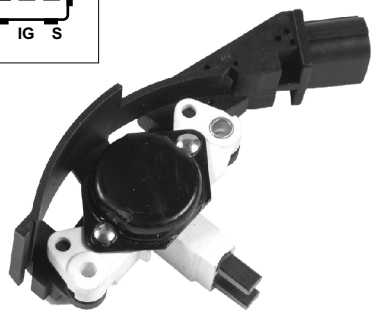

AS ARE0062

ORIGINAL **CARGO** 12V
1197311510 **139872**
MOBILETRON
VR-B510

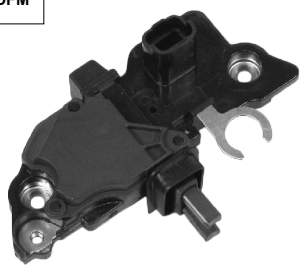

AS ARE0063

ORIGINAL **TRANSPO** **CARGO** 12 V
F00M145276 **IB276** **236717**
F00M145368
MOBILETRON
VR-B242

AS ARE0064

ORIGINAL 12 V
F00M346102
F00M346340

In offer also: ARE0064(BOSCH)

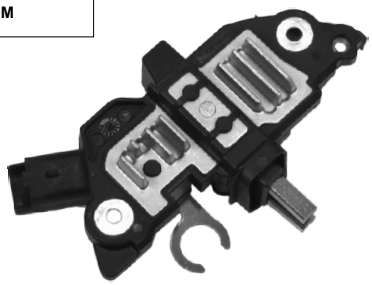

AS ARE0065(BOSCH)

ORIGINAL 12 V
F00M145322

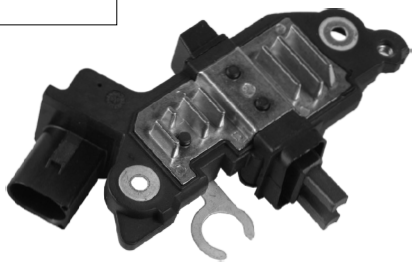

AS ARE0066

ORIGINAL **TRANSPO** **CARGO** 12 V
F00M145883 **IB266** **234771**
F00M145365
MOBILETRON
VR-B883

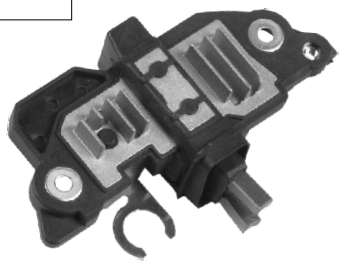

AS ARE0067

ORIGINAL **TRANSPO** 12 V
F00M144109 **IB160**
F00M144160

AS ARE0068

12 V

A-Circuit
Voltage Set Point 14.05 V

ALTERNATOR REGULATORS
BOSCH

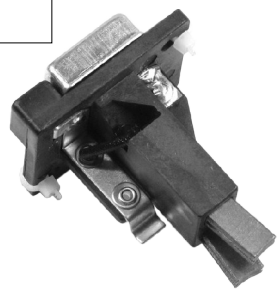

AS ARE0069

12 V

A-Circuit
Voltage Set Point 14.05 V

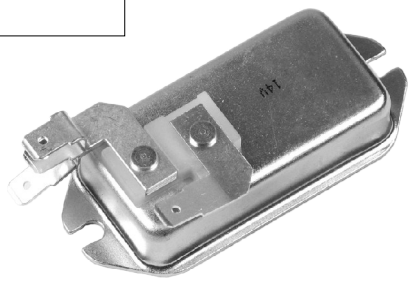

AS ARE0070

ORIGINAL 12 V
9190456007

B-Circuit
Voltage Set Point 14.10 V

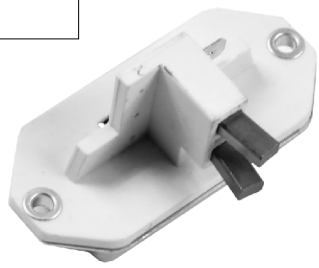

AS ARE0071

ORIGINAL **TRANSPO** **CARGO** 12V
9190457002 **IB400** **131297**
MOBILETRON
VR-B218

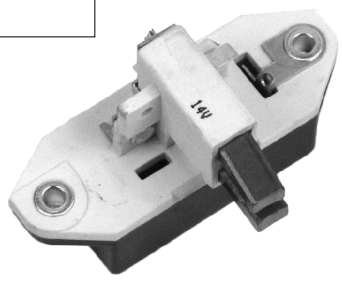

AS ARE0072

ORIGINAL 12 V
9190087026
9190087032
MOBILETRON
VR-B103

L DFM

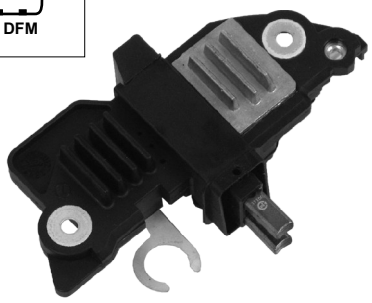

AS ARE0073

ORIGINAL **CARGO** 12 V
F00M144137 **235536**
F00M145244
F00M145356
F00M144288

COM

AS ARE0074

ORIGINAL **CARGO** 12 V
F00M145258 **236002**
F00M145289 **234038**
F00M145656
F00M145882

COM DFM

AS ARE0075(BOSCH)

ORIGINAL **CARGO** 12 V
F00M144147 **237270**
F00M145272
F00M145293
F00M145367

COM DFM

AS ARE0076(BOSCH)

ORIGINAL **CARGO** 12 V
F00M144108 **237736**
F00M144132
F00M144156
F00M145292

COM

AS ARE0077(BOSCH)

ORIGINAL 12 V
F00M346080
F00M346021
F00M346037
F00M346047

ALTERNATOR REGULATORS
DELCO

AS ARE1001

ORIGINAL **TRANSPO** **CARGO** 12 V
1116380 **D101HD** **130668**
MOBILETRON
VR-D668C

AS ARE1002

ORIGINAL **TRANSPO** **CARGO** 24 V
1116388 **D30** **130510**
MOBILETRON
VR-D672C

P L I S

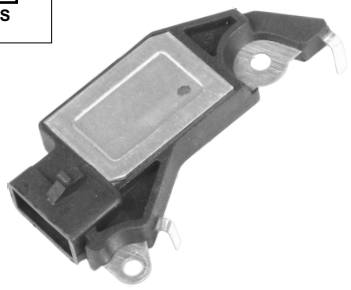

AS ARE1003

ORIGINAL **TRANSPO** **CARGO** 12 V
1116411 **D411HD** **131905**
MOBILETRON
VR-D694HD

P L I S

AS ARE1004

ORIGINAL **TRANSPO** **CARGO** 12 V
19009702 **D702** **135547**
MOBILETRON
VR-D702H

AS ARE1005

ORIGINAL **TRANSPO** **CARGO** 12 V
19009701 **DE701** **135336**
MOBILETRON
VR-D701

AS ARE1006

ORIGINAL **TRANSPO** **CARGO** 12 V
19009708 **DE708** **231796**
MOBILETRON
VR-D711

P L F S

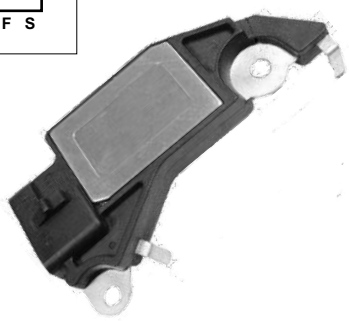

AS ARE1007

ORIGINAL **TRANSPO** **CARGO** 12 V
1116408 **D408** **131904**
MOBILETRON
VR-D675H

AS ARE1008

ORIGINAL **TRANSPO** **CARGO** 12 V
1116424 **D424** **134343**
MOBILETRON
VR-D424

AS ARE1009

ORIGINAL **TRANSPO** **CARGO** 12 V
3493079 **DE605** **132929**
MOBILETRON
VR-D674

ALTERNATOR REGULATORS
DELCO

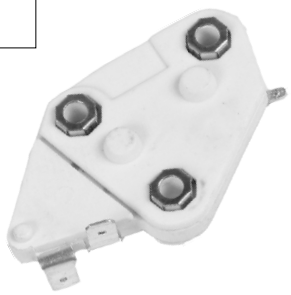

AS ARE1010

ORIGINAL **TRANSPO** **CARGO** 12 V
3472557 **DE606** **131044**
MOBILETRON
VR-D673C

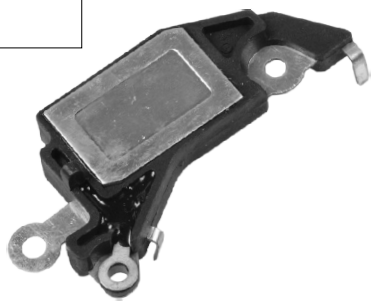

AS ARE1011

ORIGINAL **TRANSPO** **CARGO** 24 V
273110 **D401** **138387**

L I N/C

AS ARE1012

ORIGINAL **TRANSPO** **CARGO** 12 V
276010 **D403** **139467**
MOBILETRON
VR-D276

P L F S

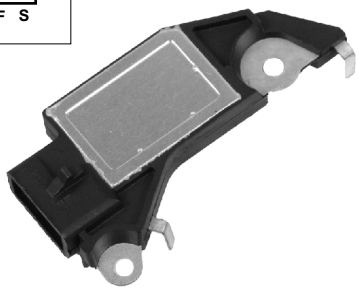

AS ARE1013

ORIGINAL **TRANSPO** **CARGO** 12 V
1116434 **D412** **131906**

P L I S

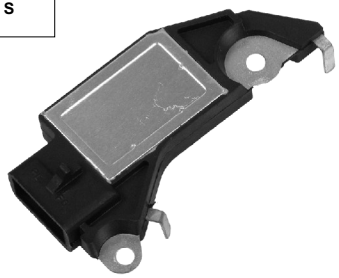

AS ARE1014

ORIGINAL **TRANSPO** **CARGO** 12 V
1116413 **D413** **133582**
MOBILETRON
VR-D681H

P L I S

AS ARE1016

ORIGINAL **TRANSPO** **CARGO** 12 V
1116425 **D425** **133581**
MOBILETRON
VR-D683H

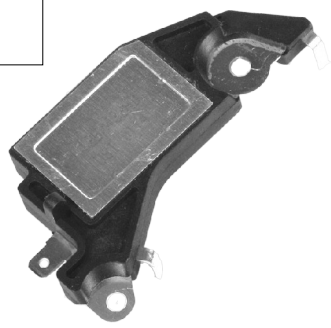

AS ARE1017

ORIGINAL **TRANSPO** **CARGO** 12 V
1116432 **D432** **133589**
MOBILETRON
VR-D432

P L I S

AS ARE1019

ORIGINAL **TRANSPO** **CARGO** 12 V
19009703 **D703** **231183**
MOBILETRON
VR-D703H

AS ARE1020

ORIGINAL **CARGO** 12 V
271710 **139468**

DAEWOO MATIZ

ALTERNATOR REGULATORS
DELCO

AS ARE1021

ORIGINAL 12 V
94652566
MOBILETRON
VR-D100

A-Circuit
Voltage Set Point 14.60 V

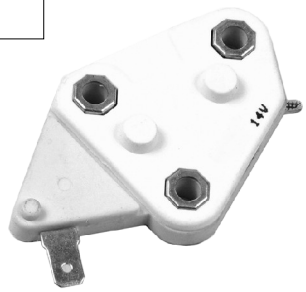

AS ARE1022

ORIGINAL **TRANSPO** **CARGO** 12 V
94648534 **DE608** **233737**
D673
MOBILETRON
VR-D690

L DFM

AS ARE1023

12 V

B-Circuit
Voltage Set Point 14.30 V
Soft Start 30%
Field
Shorted Circuit Protection

P L FR S

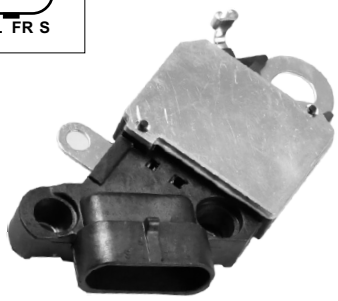

AS ARE1024

ORIGINAL **TRANSPO** 24 V
10514476 **D4476**
10521828

IG L

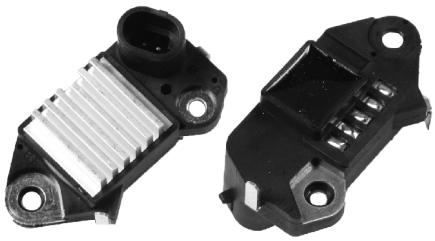

AS ARE1025

ORIGINAL **TRANSPO** **CARGO** 12 V
271940 **D940** **233975**
MOBILETRON
VR-D740

P L IG D

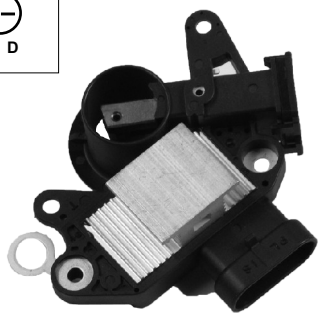

AS ARE1026

ORIGINAL **TRANSPO** 12 V
220198 **D2198**

P L FR S

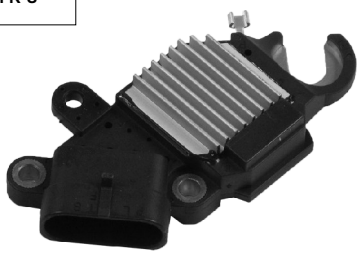

AS ARE1027

ORIGINAL **TRANSPO** **CARGO** 12 V
10458199 **D200** **232665**
10458200
10458201
10468311

P L FR S

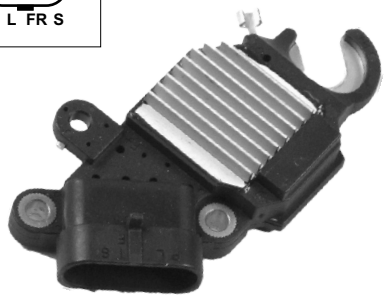

AS ARE1028

ORIGINAL **TRANSPO** 12 V
10454669 **D202**
15163024 **D202XHD**
MOBILETRON
VR-D233

ALTERNATOR REGULATORS
HITACHI

AS ARE2001

ORIGINAL	TRANSPO	CARGO	12 V
L150-93155	IH205	133543 137189	

MOBILETRON
VR-H2000-30

AS ARE2002

ORIGINAL	TRANSPO	CARGO	12 V
TR1Z-48	IH210	130834	

MOBILETRON
VR-H2000-1

AS ARE2003

ORIGINAL	TRANSPO	CARGO	12 V
TR1Z-64	IH212	131287	

MOBILETRON
VR-H2000-3

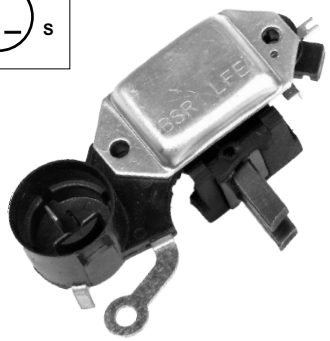

AS ARE2004

ORIGINAL	TRANSPO	CARGO	12 V
L150-33155	IH252	133544	

MOBILETRON
VR-H2000-29

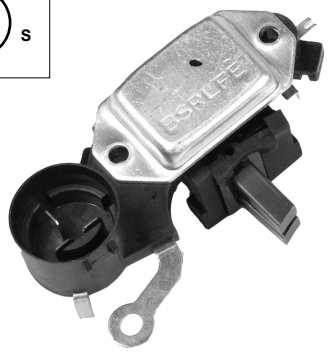

AS ARE2005

ORIGINAL	TRANSPO	CARGO	24 V
L225-53151	IH253	231292	

MOBILETRON
L225-53151

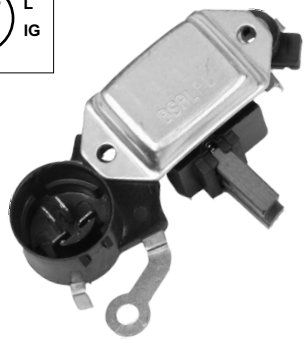

AS ARE2006

ORIGINAL	TRANSPO	CARGO	12 V
L170G-1315	IH254	137841	

MOBILETRON
VR-H2000-40

AS ARE2007

ORIGINAL	TRANSPO	CARGO	24 V
TR2Z-37	IH716	132292	

MOBILETRON
VR-H2000-3A

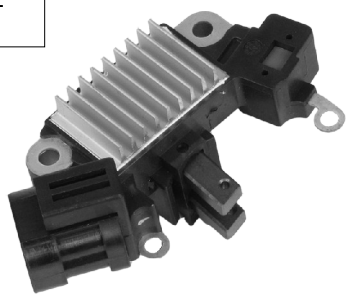

AS ARE2008

	TRANSPO	CARGO	12 V
	IH769	232443	

MOBILETRON
VR-H2000-50

AS ARE2009

ORIGINAL	TRANSPO	CARGO	12 V
L170G-7315	IH776	139980	

MOBILETRON
VR-H2000-41

ALTERNATOR REGULATORS
HITACHI

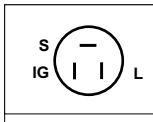

AS ARE2010

ORIGINAL **CARGO** 12 V
TR1Z-210A **137014**
MOBILETRON
VR-H2000-8

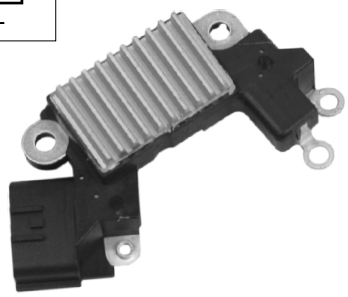

AS ARE2011

ORIGINAL **TRANSPO** **CARGO** 12 V
L1100G-3340 **IH766** **138717**
MOBILETRON
VR-H2000-28

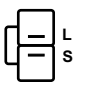

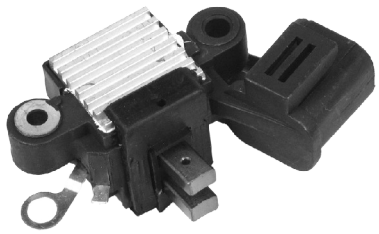

AS ARE2012

ORIGINAL **TRANSPO** **CARGO** 12 V
L170-53151 **IH242** **132991**
MOBILETRON
VR-H2000-5H

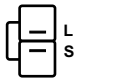

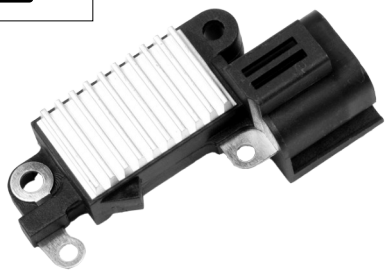

AS ARE2013

ORIGINAL **TRANSPO** **CARGO** 12 V
L180-8315 **IH248** **135158**
MOBILETRON
VR-H2000-17

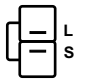

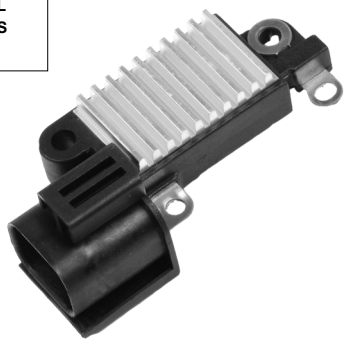

AS ARE2014

ORIGINAL **TRANSPO** **CARGO** 12 V
L170-33152 **IH760** **135027**
MOBILETRON
VR-H2000-14

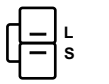

AS ARE2015

ORIGINAL **TRANSPO** **CARGO** 12 V
L180G-2340 **IH761** **135021**
MOBILETRON
VR-H2000-16

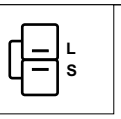

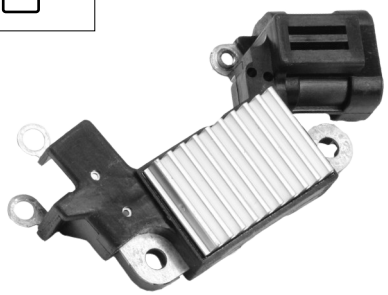

AS ARE2016

ORIGINAL **TRANSPO** **CARGO** 12 V
L185G-2340 **IH765** **234311**

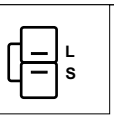

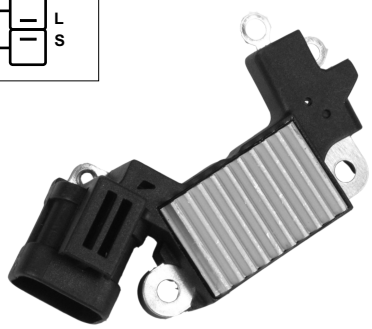

AS ARE2017

ORIGINAL **TRANSPO** **CARGO** 12 V
L170G-6315 **IH767** **138727**
MOBILETRON
VR-H2000-38

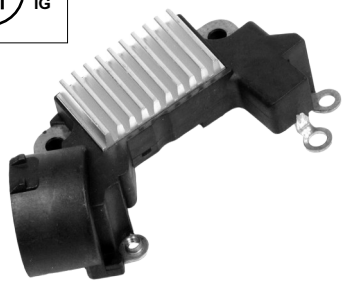

AS ARE2018

TRANSPO **CARGO** 12 V
IH772 **234908**
MOBILETRON
VR-H2000-48

ALTERNATOR REGULATORS
HITACHI

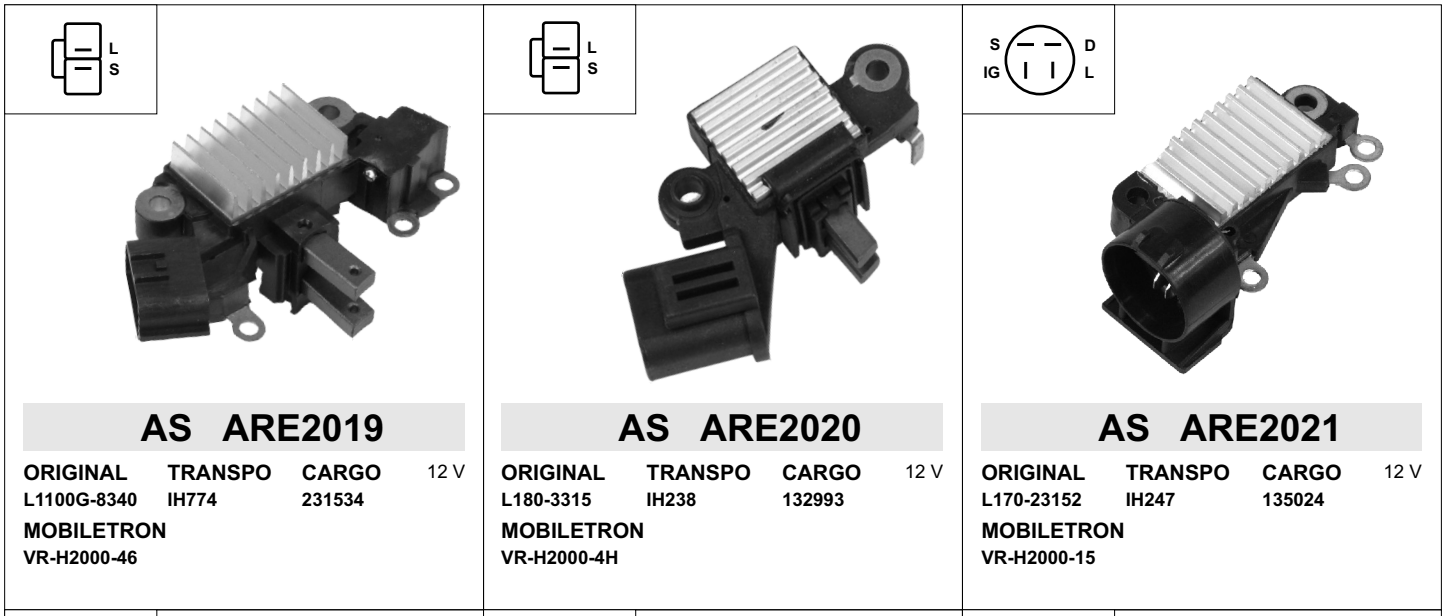

AS ARE2019

ORIGINAL	TRANSPO	CARGO	12 V
L1100G-8340	IH774	231534	

MOBILETRON
VR-H2000-46

AS ARE2020

ORIGINAL	TRANSPO	CARGO	12 V
L180-3315	IH238	132993	

MOBILETRON
VR-H2000-4H

AS ARE2021

ORIGINAL	TRANSPO	CARGO	12 V
L170-23152	IH247	135024	

MOBILETRON
VR-H2000-15

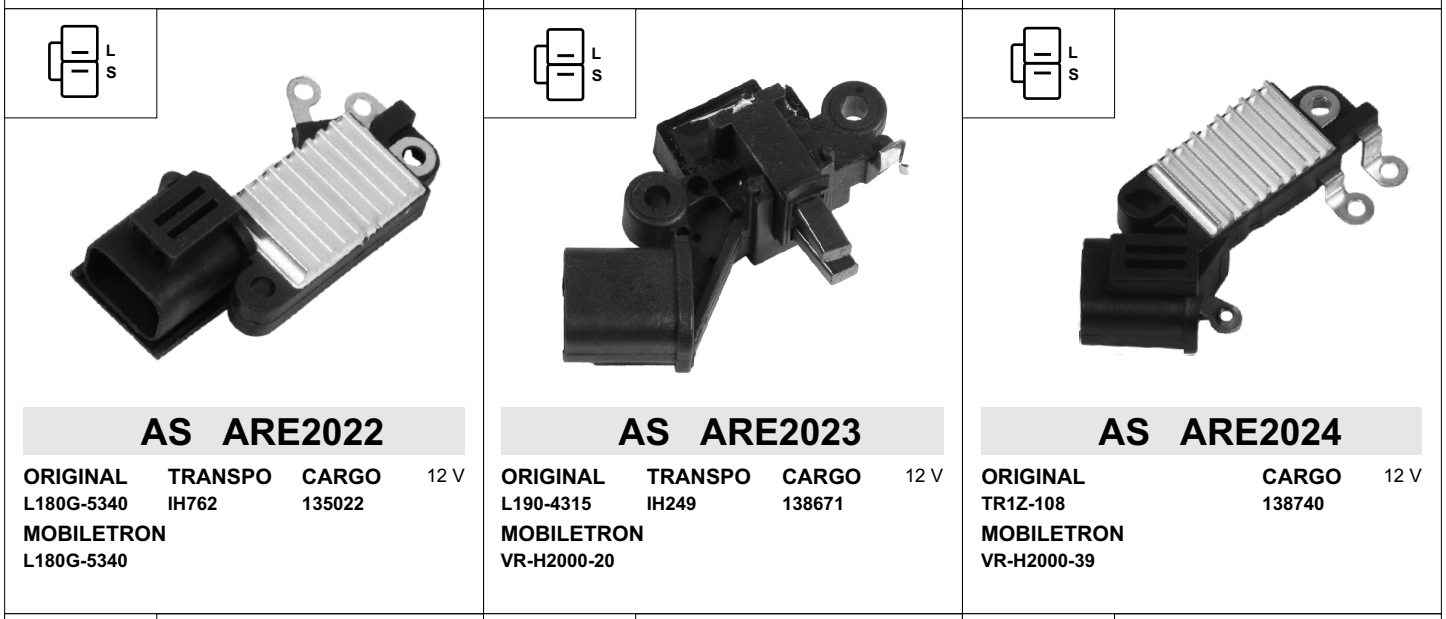

AS ARE2022

ORIGINAL	TRANSPO	CARGO	12 V
L180G-5340	IH762	135022	

MOBILETRON
L180G-5340

AS ARE2023

ORIGINAL	TRANSPO	CARGO	12 V
L190-4315	IH249	138671	

MOBILETRON
VR-H2000-20

AS ARE2024

ORIGINAL	CARGO	12 V
TR1Z-108	138740	

MOBILETRON
VR-H2000-39

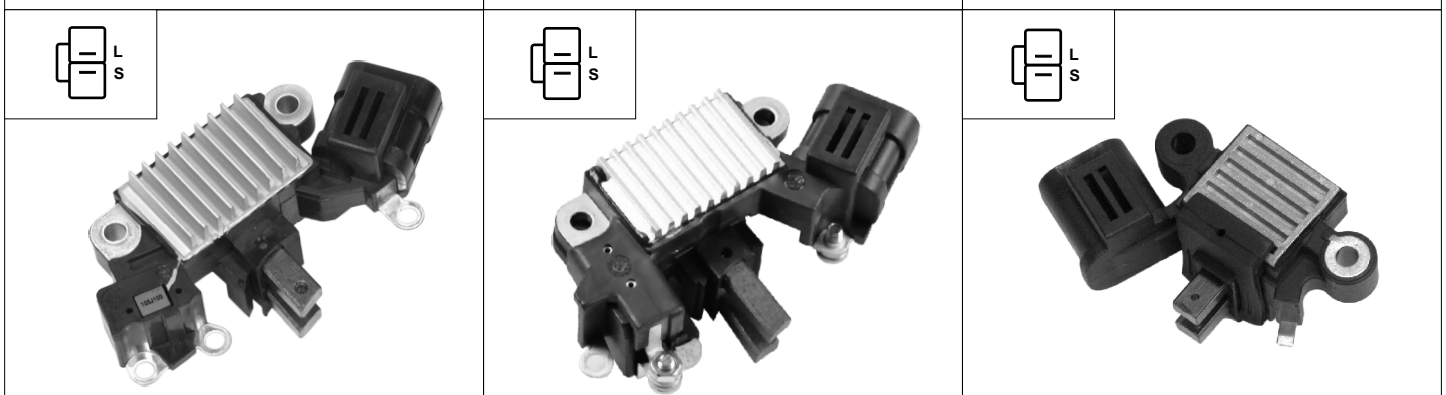

AS ARE2025

	TRANSPO	CARGO	12 V
	IH738	235659	

MOBILETRON
VR-H2000-44

AS ARE2026

ORIGINAL	TRANSPO	CARGO	12 V
L190G-5340	IH782	234314	

MOBILETRON
VR-H2000-43

AS ARE2027

ORIGINAL	TRANSPO	CARGO	12 V
L170-43151	IH245	133529	

MOBILETRON
VR-H2000-11

ALTERNATOR REGULATORS
HITACHI

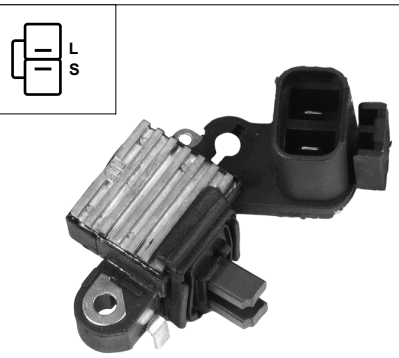

AS ARE2028

CARGO 12 V
132992

TRANSPO
IH237

CARGO
132992

MOBILETRON
VR-H2000-6H

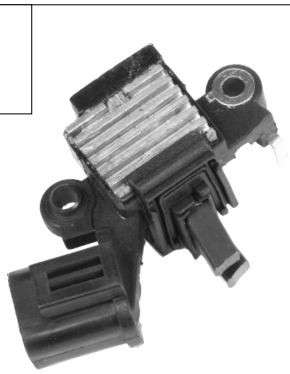

AS ARE2030

ORIGINAL 12 V
L180-7315

TRANSPO
IH239

CARGO
132990

MOBILETRON
VR-H2000-7H

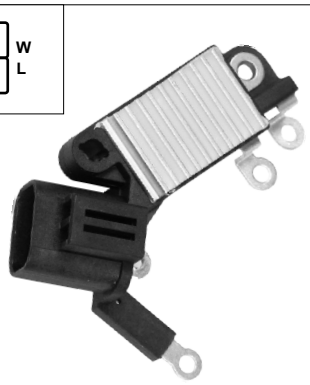

AS ARE2031

ORIGINAL 12 V
TR1Z-712

CARGO
230433

AS ARE2032

CARGO 12 V
238691

MOBILETRON
VR-H2000-64

AS ARE2033

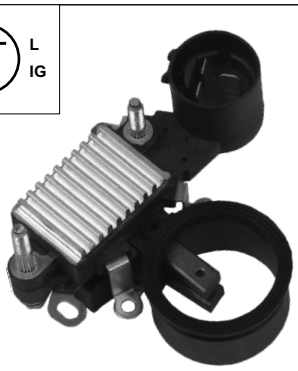

AS ARE2034

ORIGINAL 12 V
L180G-2315

FOR LR180-501

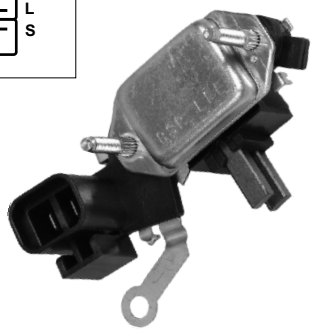

AS ARE2035

ORIGINAL 24 V
L225-9315

CARGO
234701

AS ARE2036

ORIGINAL 12 V
L1100G-6340
L160G-2315
L180G-2341
L180G-3340

CARGO
234273

Electric conections - page 4

ALTERNATOR REGULATORS
VALEO

AS ARE3001

ORIGINAL **TRANSPO** **CARGO** 12 V
2522939 **M506** **131224**
MOBILETRON
VR-VW005N

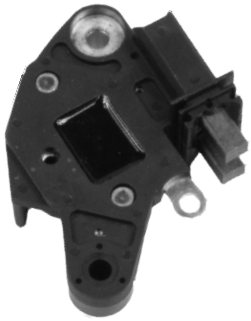

AS ARE3002

ORIGINAL **TRANSPO** **CARGO** 12 V
592791 **M511** **134475**
MOBILETRON
VR-VW010

AS ARE3003

ORIGINAL **TRANSPO** **CARGO** 12 V
YH1925 **IP125** **130661**
MOBILETRON
VR-PR2000H

AS ARE3004

ORIGINAL **TRANSPO** **CARGO** 12 V
YH1652 **IP1652** **130657**
MOBILETRON
VR-PR1000H

L
IGN

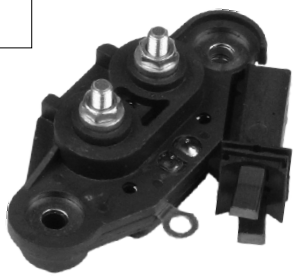

AS ARE3005

ORIGINAL **TRANSPO** **CARGO** 12 V
2541496 **M513** **135434**
MOBILETRON
VR-PR1667

L

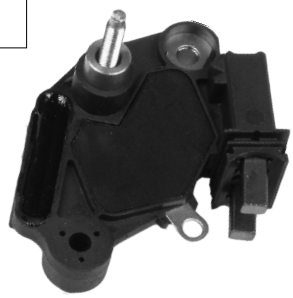

AS ARE3006

ORIGINAL **TRANSPO** **CARGO** 12 V
2541715 **M514** **136546**
MOBILETRON
VR-PR1669

L

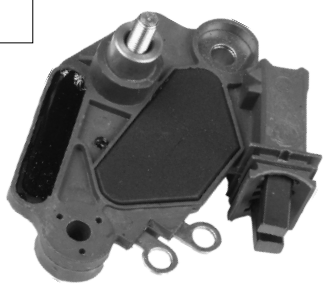

AS ARE3007

ORIGINAL **TRANSPO** **CARGO** 12 V
593349 **M517** **139456**
MOBILETRON
VR-PR002H

L

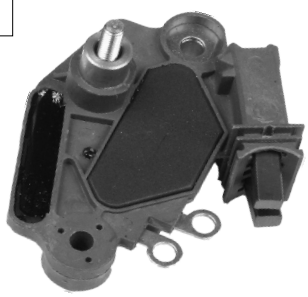

AS ARE3008

ORIGINAL **TRANSPO** **CARGO** 12 V
593319 **M557** **139482**
MOBILETRON
VR-PR003H

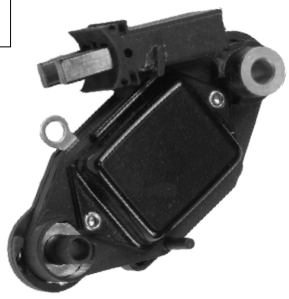

AS ARE3009

ORIGINAL **TRANSPO** **CARGO** 12 V
592802 **M512** **135513**
MOBILETRON
VR-PR1668

ALTERNATOR REGULATORS
VALEO

AS ARE3010

ORIGINAL **TRANSPO** **CARGO** 12 V
2542292 **M521** **231103**
MOBILETRON
VR-PR2292

AS ARE3011

ORIGINAL **TRANSPO** **CARGO** 12 V
YH1639 **IP1639** **131146**
MOBILETRON
VR-PR126

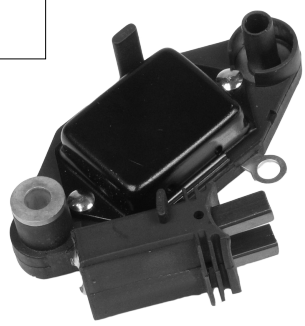

AS ARE3012

ORIGINAL **CARGO** 24 V
593260 **137489**
MOBILETRON
VR-PR3960

AS ARE3013

ORIGINAL **TRANSPO** **CARGO** 24 V
ZL129 **IP129B** **131300**
300744

L

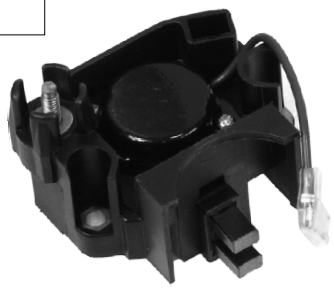

AS ARE3014

ORIGINAL **TRANSPO** **CARGO** 12 V
YV1926T **IP1926** **133492**
MOBILETRON
VR-PR135B

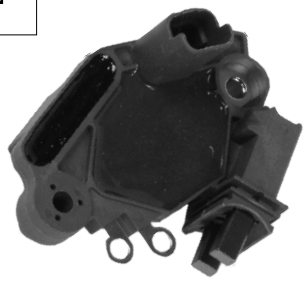

AS ARE3016

ORIGINAL **TRANSPO** **CARGO** 12 V
593316 **M516** **139440**
MOBILETRON
VR-PR1620H

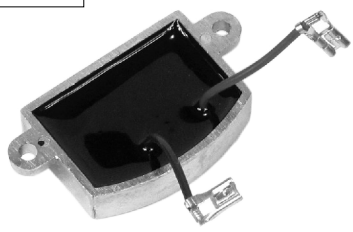

AS ARE3017

ORIGINAL **TRANSPO** **CARGO** 12 V
505029 **M5-763** **130849**
MOBILETRON
VR-VW002

AS ARE3018

ORIGINAL **TRANSPO** **CARGO** 12 V
690686 **ID1010** **131222**
MOBILETRON
VR-DU511

AS ARE3019

ORIGINAL **TRANSPO** **CARGO** 12 V
593284 **M519** **235082**
MOBILETRON
VR-PR6603H

Electric conections - page 4

ALTERNATOR REGULATORS
VALEO

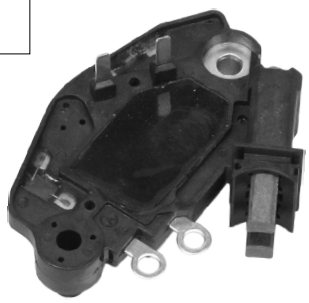

AS ARE3020

ORIGINAL **TRANSPO** **CARGO** 12 V
593419 M564 233633
MOBILETRON
VR-V3419

AS ARE3021

TRANSPO **CARGO** 12 V
M507 131224
MOBILETRON
VR-VW005N

AS ARE3022

TRANSPO **CARGO** 12 V
M508 133664

15 61E

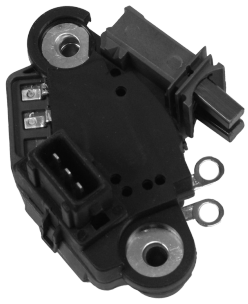

AS ARE3023

ORIGINAL **TRANSPO** **CARGO** 12 V
YM10616P1C M527 230944
MOBILETRON
VR-PR3617H

15 61E

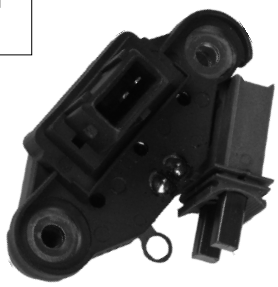

AS ARE3024

ORIGINAL **TRANSPO** **CARGO** 12 V
593132 M537 139475
MOBILETRON
VR-PR1671

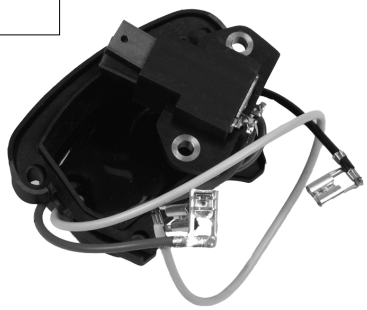

AS ARE3025

ORIGINAL **TRANSPO** **CARGO** 24 V
590536 IP729B 131300
MOBILETRON
VR-PR3729A

L

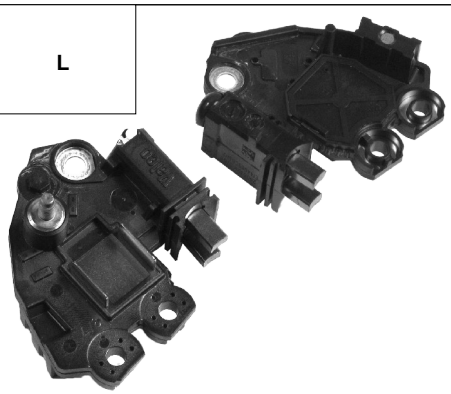

AS ARE3026

ORIGINAL **CARGO** 12 V
593454 234961

L

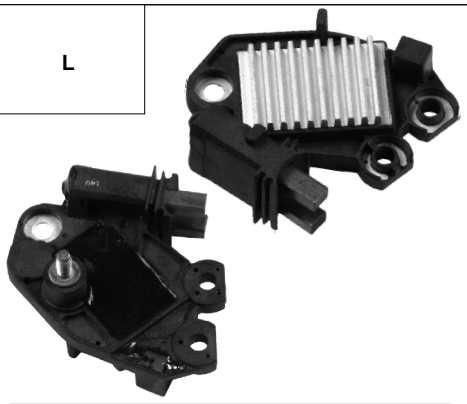

AS ARE3027

ORIGINAL **CARGO** 12 V
593534 234115
MOBILETRON
VR-PR3534

L

AS ARE3028

ORIGINAL **CARGO** 12 V
593384 232962
MOBILETRON
VR-PR2299H

ALTERNATOR REGULATORS
VALEO

L DF/DFM

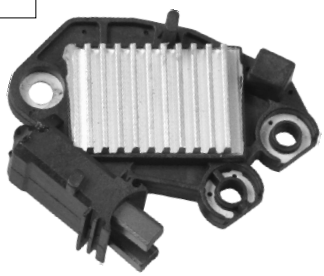

AS ARE3029

ORIGINAL	TRANSPO	CARGO	12 V
593689	M546	234818	

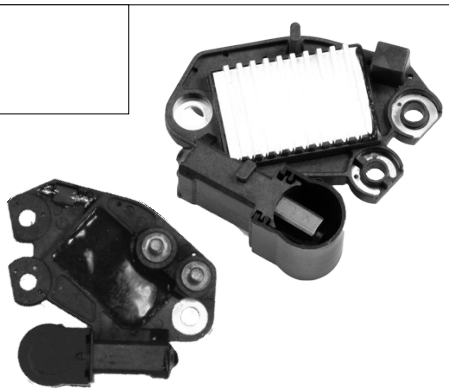

AS ARE3030

ORIGINAL	TRANSPO	CARGO	12 V
593529	M562	234982	

MOBILETRON
VR-PR3529

L DFM

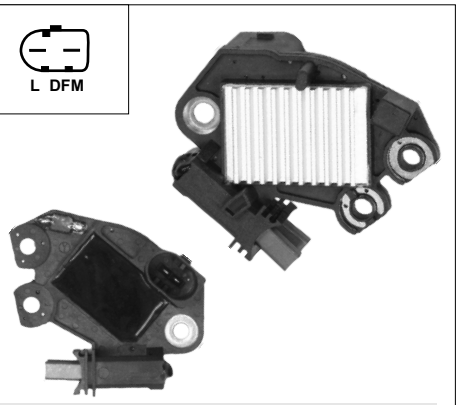

AS ARE3031

ORIGINAL	CARGO	12 V
593793	236601	

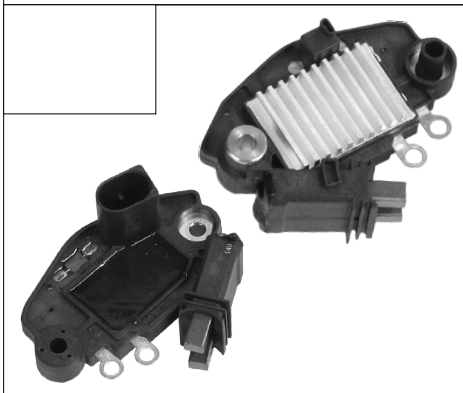

AS ARE3032

ORIGINAL	CARGO	12 V
593362	234533	

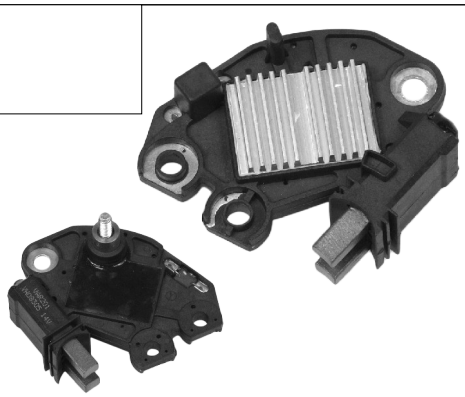

AS ARE3033

12 V

COM DFM

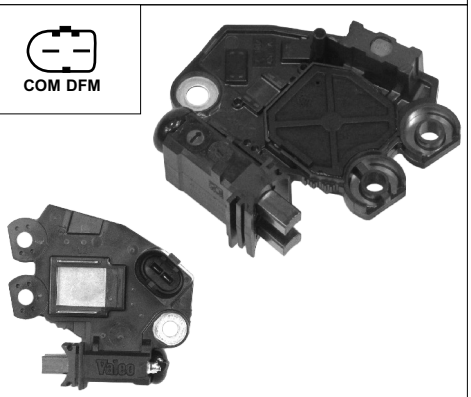

AS ARE3034(VALEO)

ORIGINAL	CARGO	12 V
593780	236597	

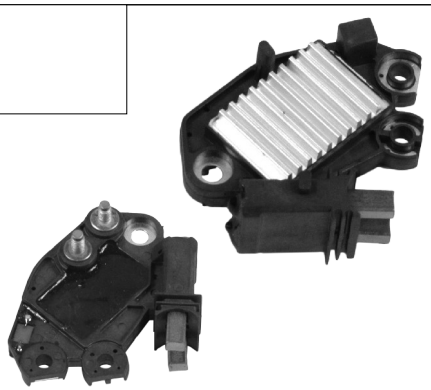

AS ARE3035

ORIGINAL	12 V
593773	

S F L X

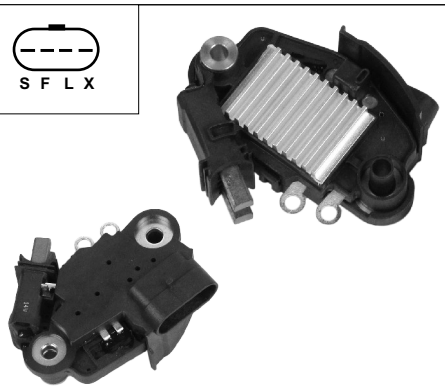

AS ARE3036

ORIGINAL	CARGO	12 V
593339	230686	

MOBILETRON
VR-PR6366

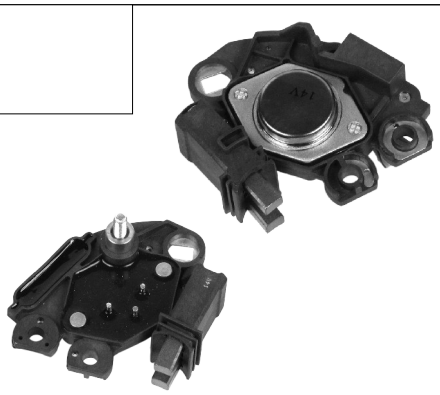

AS ARE3037

ORIGINAL	CARGO	12 V
593434	235079	
593446		

ALTERNATOR REGULATORS
VALEO

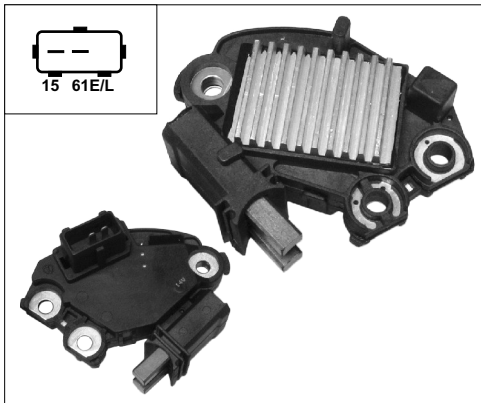

AS ARE3038

ORIGINAL **TRANSPO** **CARGO** 12 V
593423 **M523** **237938**

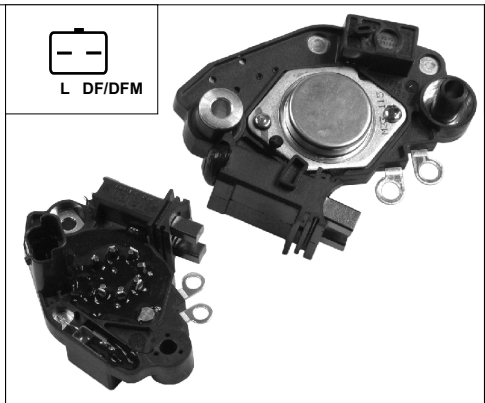

AS ARE3039(VALEO)

ORIGINAL **CARGO** 12 V
593666 **236306**

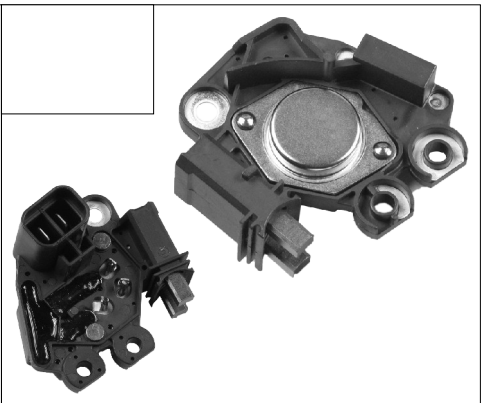

AS ARE3040

12 V

A-Circuit
Voltage Set Point 14.70 V

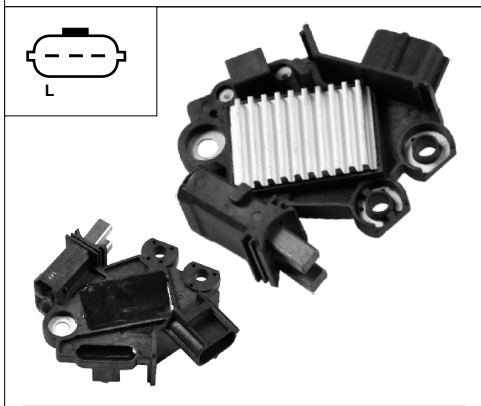

AS ARE3041

ORIGINAL **B**-Circuit 12 V
493811 **Voltage Set Point** 14.50 V
Soft Start 32%
FOR: **LRC** 5 sec
93312974 **Field, Shorted Circuit Protection**
SG9B082 **Under Voltage Indication**
Over Voltage Indication

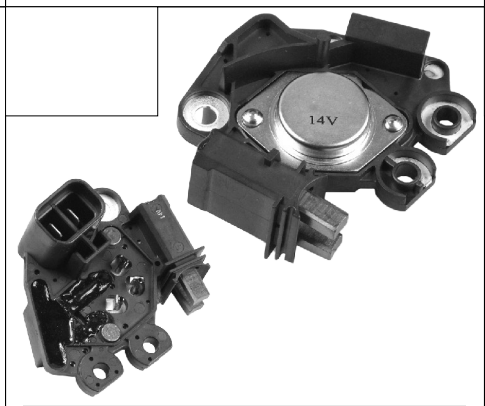

AS ARE3042

12 V

A-Circuit
Voltage Set Point 14.70 V

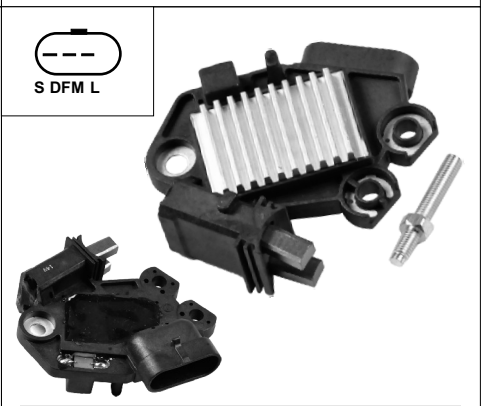

AS ARE3043

B-Circuit 12 V
Voltage Set Point 14.80 V
Soft Start 30 %
LRC 5 sec
Field, Shorted Circuit Protection
Sense Open Indication, Under Voltage Indication
Over Voltage Indication, DFM function

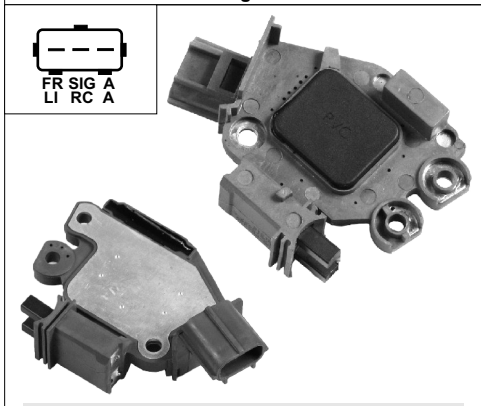

AS ARE3044

ORIGINAL **CARGO** 12 V
593675 **234820**
YH0601
MOBILETRON
VR-PR4920

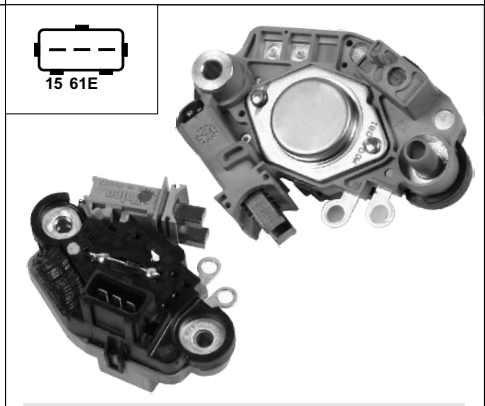

AS ARE3045(VALEO)

ORIGINAL **CARGO** 12 V
593347 **231663**
593391
2542209
2542209B

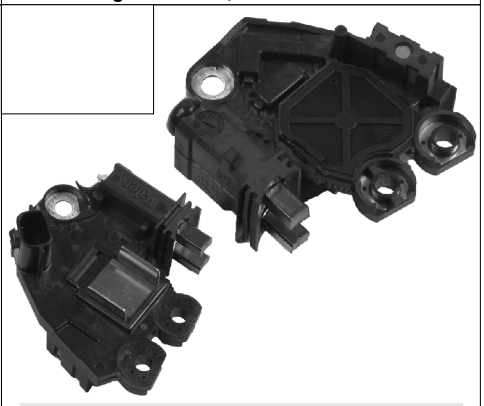

AS ARE3046(VALEO)

ORIGINAL 12 V
595253

ALTERNATOR REGULATORS
VALEO

AS ARE3047(VALEO)

ORIGINAL **CARGO** 12 V
593511 **235229**
593779
YM1675VFP6
YM6670VF

AS ARE3048

ORIGINAL **TRANSPO** **CARGO** 24 V
092901 **IP126** **131120**
092962
MOBILETRON
VR-PR128B

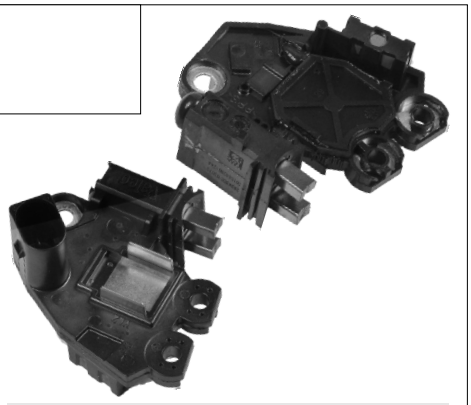

AS ARE3049(VALEO)

ORIGINAL 12 V
595325

for TG17C061

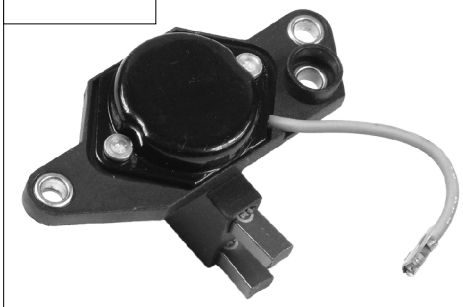

AS ARE3050

ORIGINAL **TRANSPO** **CARGO** 12 V
592602 **M510** **137694**
2518396
YV5914H
2518025

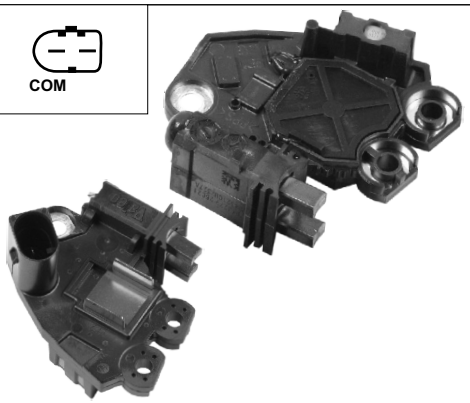

AS ARE3051(VALEO)

ORIGINAL 12 V
595243

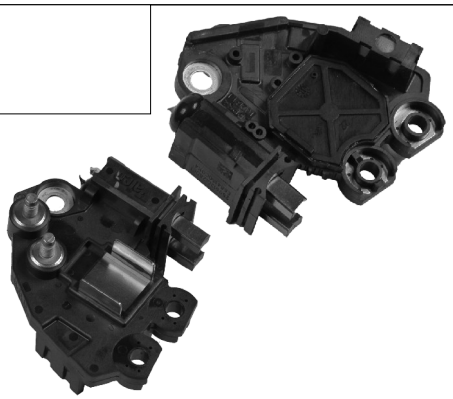

AS ARE3052(VALEO)

ORIGINAL **CARGO** 12 V
593993 **239885**

D+/DF
Voltage Set Point 14.50 V

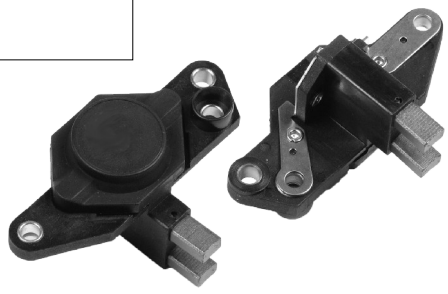

AS ARE3053

ORIGINAL **TRANSPO** **CARGO** 12 V
592792 **M509** **133783**
2541141
MOBILETRON
VR-VW009

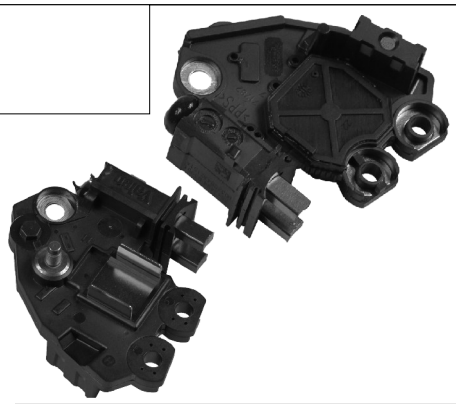

AS ARE3054(VALEO)

ORIGINAL **TRANSPO** **CARGO** 12 V
593532 **M561** **235657**
YR6608

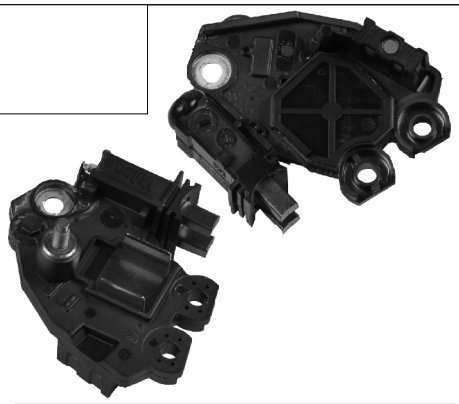

AS ARE3055(VALEO)

ORIGINAL 12 V
599102

ALTERNATOR REGULATORS
MAGNETI MARELLI

AS ARE4001

ORIGINAL **TRANSPO** **CARGO** 12 V
54206688 **IL223** **131277**
MOBILETRON
VR-LC111

AS ARE4002

ORIGINAL **TRANSPO** **CARGO** 24 V
UCB155 **IL225** **135231**
MOBILETRON
VR-LC111B

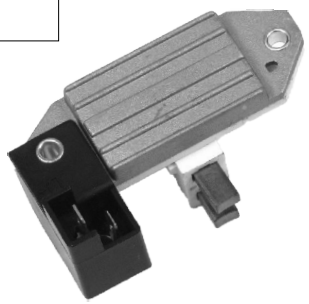

AS ARE4003

ORIGINAL **TRANSPO** **CARGO** 12 V
UCB808 **IX110** **131283**
58120022
MOBILETRON
VR-F119

L

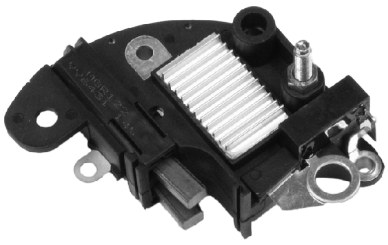

AS ARE4004

ORIGINAL **TRANSPO** **CARGO** 12 V
85561291 **IX121** **136432**
RTM121A **MOBILETRON**
VR-F151A

In offer also :
ARE4004(OEM) - Cut-in Speed: 1200rpm

W
L

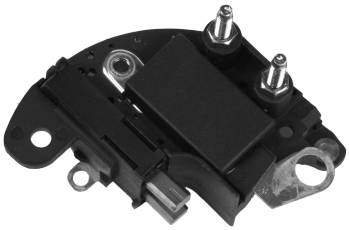

AS ARE4005

ORIGINAL **TRANSPO** **CARGO** 12 V
RTM153B **IX123** **138789**
MOBILETRON
VR-F153A

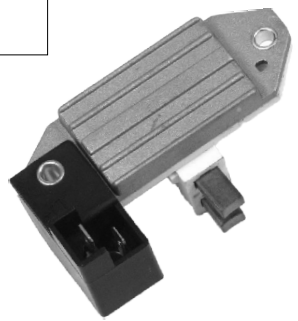

AS ARE4006

ORIGINAL **TRANSPO** **CARGO** 24 V
RTT119B **IX111** **131286**
MOBILETRON
VR-F119B

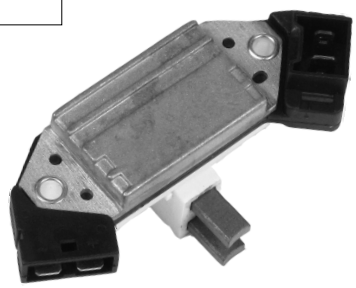

AS ARE4007

ORIGINAL **TRANSPO** **CARGO** 12 V
RTT118C **IX118** **133956**
MOBILETRON
VR-F118

S
W
L

AS ARE4008

ORIGINAL **TRANSPO** **CARGO** 12 V
83614251 **IX127** **136457**
MOBILETRON
VR-F121T

AS ARE4009

ORIGINAL **TRANSPO** **CARGO** 12 V
RTT114A **IX106** **130652**
MOBILETRON
VR-F114A

ALTERNATOR REGULATORS
MAGNETI MARELLI

W
L

AS ARE4010

ORIGINAL **TRANSPO** **CARGO** 12 V
28018A **IX128** **136457**
MOBILETRON
VR-F121

FR SIG A

AS ARE4011

CARGO **TRANSPO** **CARGO** 12 V
230790 **IX131** **230790**
MOBILETRON
VR-F156
In offer also: ARE4011(MM) - OEM Magneti Marelli

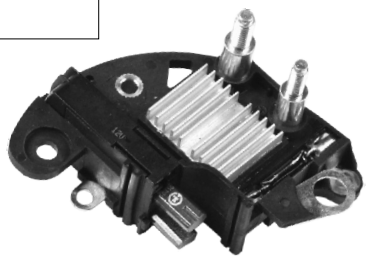

AS ARE4012

ORIGINAL **CARGO** 12 V
85562731 **236579**
85562881

L
DFM

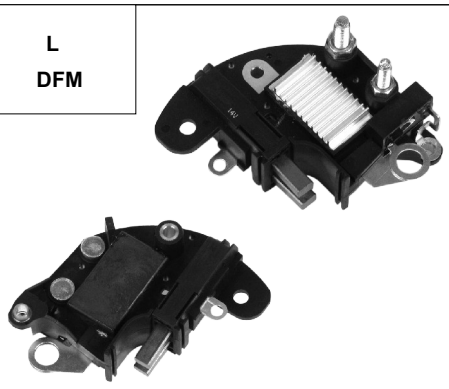

AS ARE4013

ORIGINAL **CARGO** 12 V
85563481 **233636**
RTM200.03
MOBILETRON
VR-F160

L
DFM

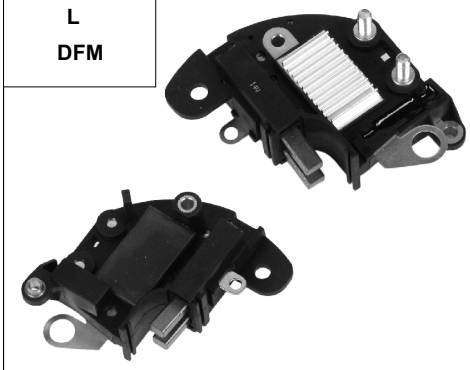

AS ARE4014

ORIGINAL **CARGO** 12 V
85563491 **238265**
MOBILETRON
VR-F157

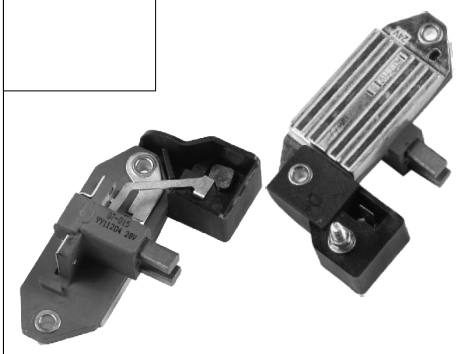

AS ARE4015

ORIGINAL **CARGO** 24 V
83606411 **138796**

L DFM

AS ARE4016

12 V

B-Circuit
Voltage Set Point 14.50 V

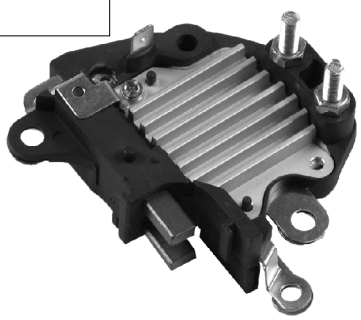

AS ARE4018

24 V

L

AS ARE4019

12 V

for 101210-0960

ALTERNATOR REGULATORS
MAGNETI MARELLI

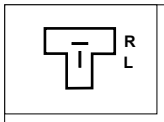

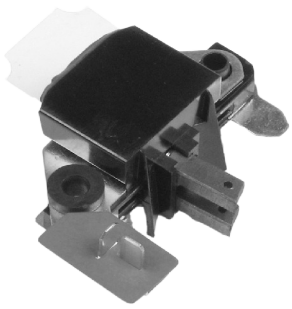

AS ARE5001

ORIGINAL	TRANSPO	CARGO	12 V
A866T00470	IM204	130835	
A866T00670			

MOBILETRON
VR-H2009

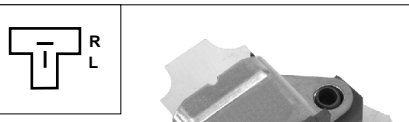

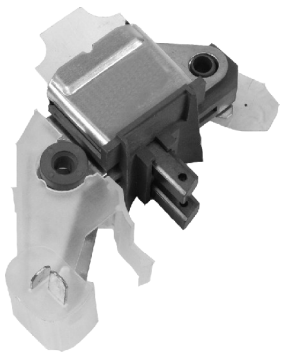

AS ARE5002

ORIGINAL	TRANSPO	CARGO	12 V
A866T03070	IM205	131290	
A866T18270			

MOBILETRON
VR-H2009-18

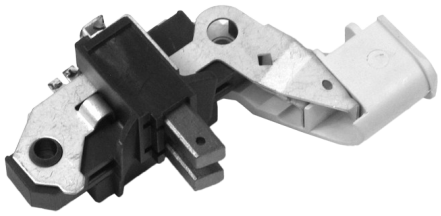

AS ARE5003

ORIGINAL	TRANSPO	CARGO	24 V
A866T06870	IM212	137396	

MOBILETRON
VR-H2009-47

AS ARE5004

ORIGINAL	TRANSPO	CARGO	12 V
A866X04872	IM216	131524	

MOBILETRON
VR-H2009-4H

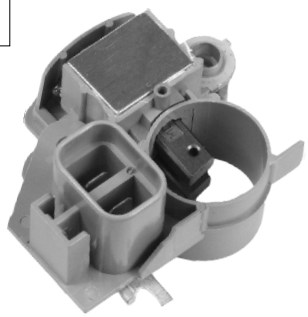

AS ARE5005

ORIGINAL	TRANSPO	CARGO	12 V
A866X05270	IM217	131523	
A866X12472			

MOBILETRON
VR-H2009-6H

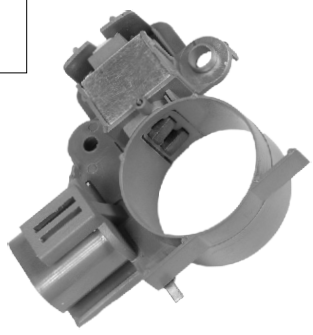

AS ARE5006

ORIGINAL	TRANSPO	CARGO	12 V
A866X09171	IM281	131471	

MOBILETRON
VR-H2009-28

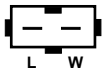

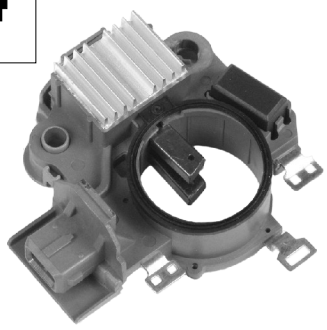

AS ARE5007

ORIGINAL	TRANSPO	CARGO	12 V
A866X40371	IM757	230985	

MOBILETRON
VR-H2009-82

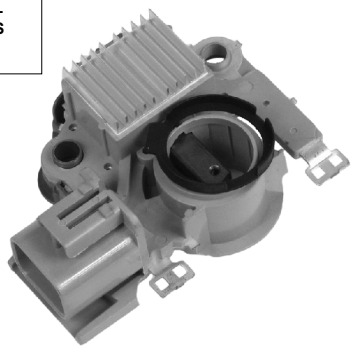

AS ARE5008

ORIGINAL	TRANSPO	CARGO	12 V
A866X20472	IM830	135233	

MOBILETRON
VR-H2009-22

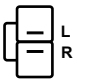

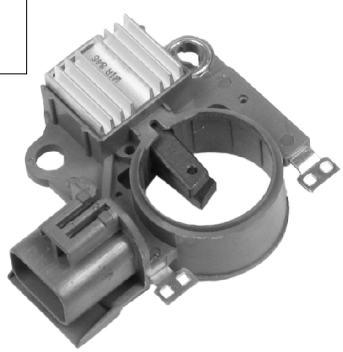

AS ARE5009

ORIGINAL	TRANSPO	CARGO	24 V
A866X28372	IM846	234304	

MOBILETRON
VR-H2009-80B

Electric conections - page 4

ALTERNATOR REGULATORS
MITSUBISHI

L
S

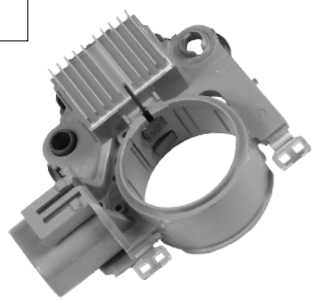

AS ARE5010

ORIGINAL **TRANSPO** **CARGO** 12 V
A866X24972 **IM847** **137075**
MOBILETRON
VR-H2009-67

L
S

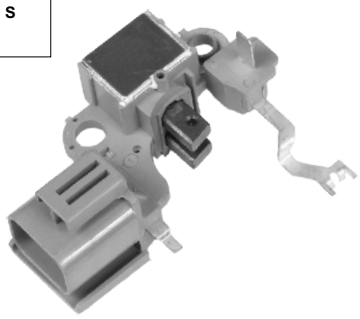

AS ARE5011

ORIGINAL **TRANSPO** **CARGO** 12 V
A866X12782 **IM265** **132101**
MOBILETRON
VR-H2009-7H

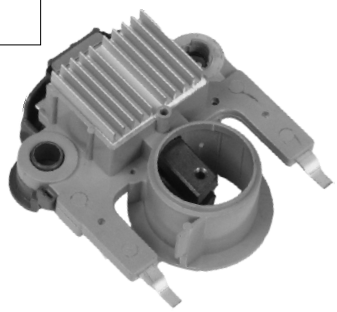

AS ARE5012

ORIGINAL **TRANSPO** **CARGO** 12 V
A866X23200 **IM232** **139043**
MOBILETRON
VR-H2009-49

L
S

AS ARE5013

ORIGINAL **TRANSPO** 12 V
A866T09780 **IM831**
MOBILETRON
VR-H2009-78

L

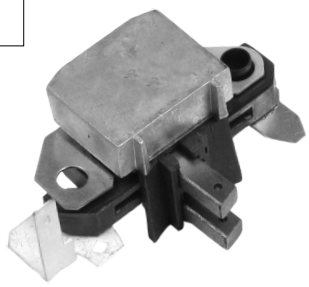

AS ARE5014

ORIGINAL **TRANSPO** **CARGO** 12 V
A866T03870 **IM210** **131521**
MOBILETRON
VR-H2009-16

L
S

AS ARE5016

ORIGINAL **TRANSPO** **CARGO** 12 V
A666X14570 **IM278** **134088**
MOBILETRON
VR-H2009-103

L
S

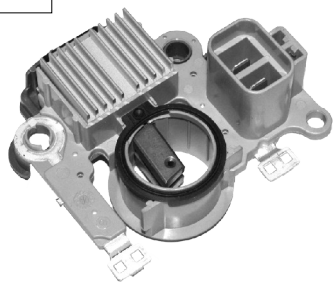

AS ARE5017

ORIGINAL **TRANSPO** **CARGO** 12 V
A866X27572 **IM854** **139110**
MOBILETRON
VR-H2009-79

L
S

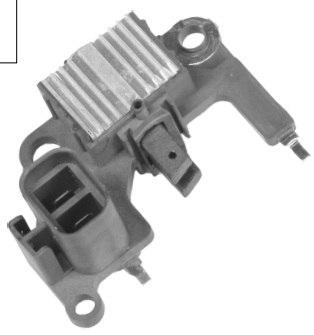

AS ARE5018

ORIGINAL **TRANSPO** **CARGO** 12 V
A866X17072 **IM280** **135032**
MOBILETRON
VR-H2009-33

P
D

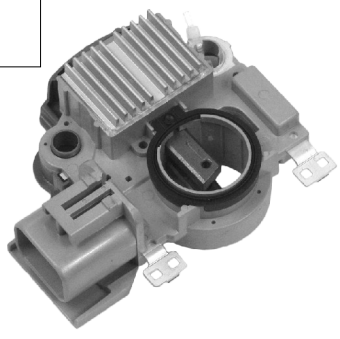

AS ARE5019

ORIGINAL **TRANSPO** **CARGO** 12 V
A866X35472 **IM345** **138872**
MOBILETRON
VR-H2009-95

ALTERNATOR REGULATORS
MITSUBISHI

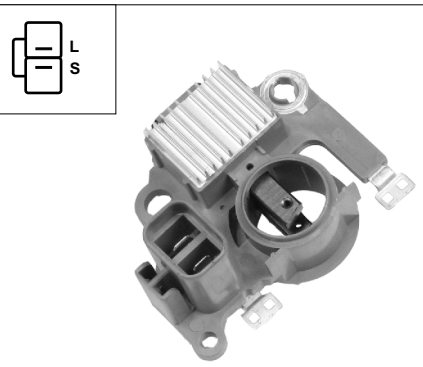

AS ARE5020

ORIGINAL	TRANSPO	CARGO	12 V
A866X23182	IM832	136649	

MOBILETRON
VR-H2009-38

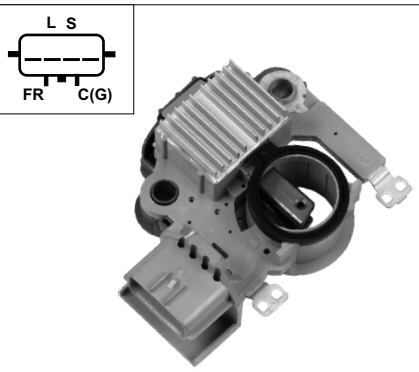

AS ARE5021

ORIGINAL	TRANSPO	CARGO	12 V
A866X28572	IM845	234313	

MOBILETRON
VR-H2009-73

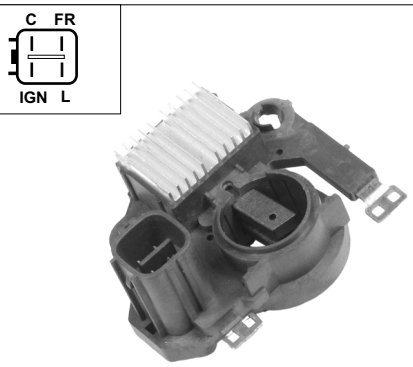

AS ARE5022

	TRANSPO	CARGO	12 V
	IM850	230260	

MOBILETRON
VR-H2009-71

AS ARE5024

		CARGO	12 V
		230990	

MOBILETRON
VR-H2009-59

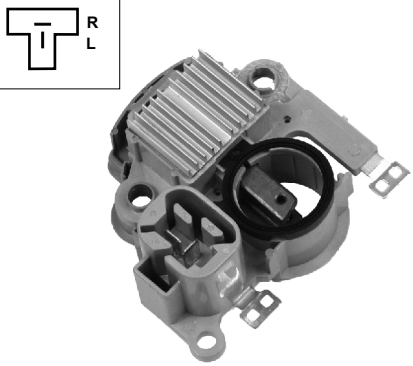

AS ARE5025

ORIGINAL	TRANSPO	CARGO	12 V
A866X26172	IM290	138309	

MOBILETRON
VR-H2009-63

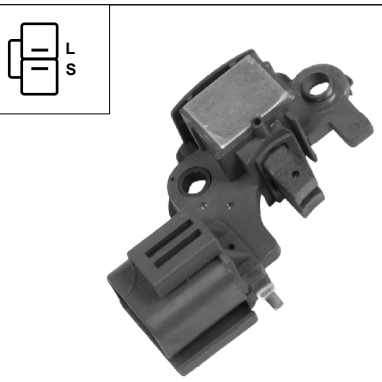

AS ARE5026

ORIGINAL	TRANSPO	CARGO	12 V
A866X06470	IM262, IM263	132102	

MOBILETRON
VR-H2009-27

AS ARE5027

ORIGINAL	TRANSPO	CARGO	12 V
A866X13970	IM268	137748	

MOBILETRON
VR-H2009-10A

AS ARE5028

ORIGINAL	TRANSPO	CARGO	12 V
A866X14072	IM270	232449	

MOBILETRON
VR-H2009-11H

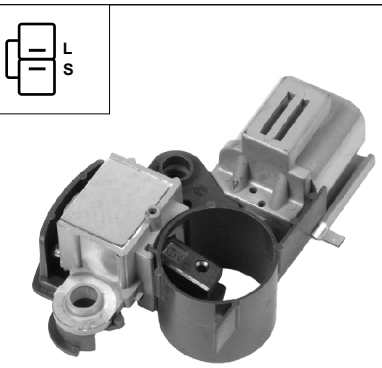

AS ARE5029

ORIGINAL	TRANSPO	CARGO	12 V
A866X08472	IM274	132936	

MOBILETRON
VR-H2009-23

ALTERNATOR REGULATORS
MITSUBISHI

AS ARE5030

ORIGINAL **TRANSPO** **CARGO** 12 V
A866X12682 **IM282** **136549**
MOBILETRON
VR-H2009-30

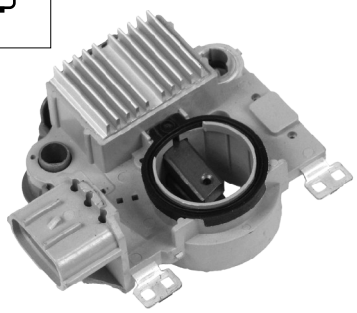

AS ARE5031

TRANSPO **CARGO** 12 V
IM848 **235102**
MOBILETRON
VR-H2009-107

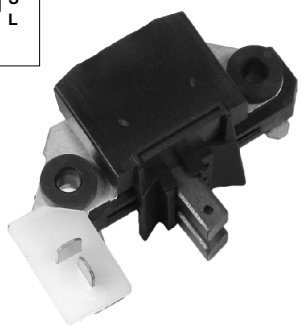

AS ARE5032

ORIGINAL **TRANSPO** **CARGO** 12 V
A866T00870 **IM225** **131289**
A866T02970
MOBILETRON
VR-H2009-3

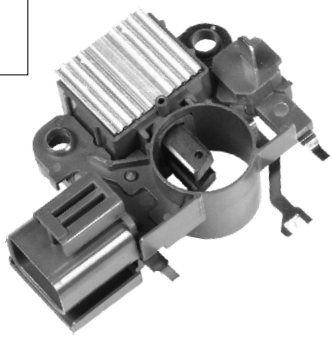

AS ARE5033

ORIGINAL **TRANSPO** **CARGO** 12 V
A866X17172 **IM279** **134026**
MOBILETRON
VR-H2009-24

AS ARE5034

ORIGINAL **TRANSPO** **CARGO** 12 V
A860X23072 **IM292** **137182**
MOBILETRON
VR-H2009-45

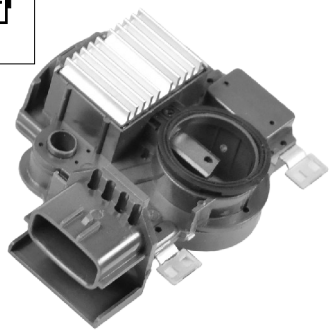

AS ARE5035

ORIGINAL **TRANSPO** **CARGO** 12 V
A866X34172 **IM341** **138340**
MOBILETRON
VR-H2009-70A

AS ARE5036

ORIGINAL **CARGO** 12 V
A866X35672 **231510**
MOBILETRON
VR-H2009-99

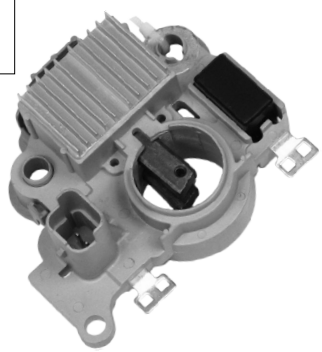

AS ARE5037

CARGO 12 V
235547
MOBILETRON
VR-H2009-112

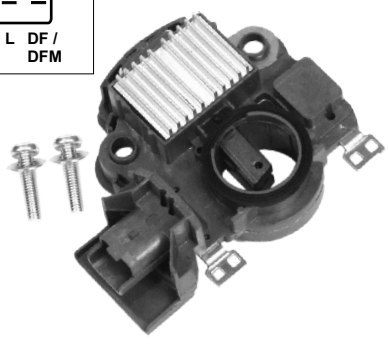

AS ARE5038

TRANSPO **CARGO** 12 V
IM498 **235450**
MOBILETRON
VR-H2009-105

ALTERNATOR REGULATORS
MITSUBISHI

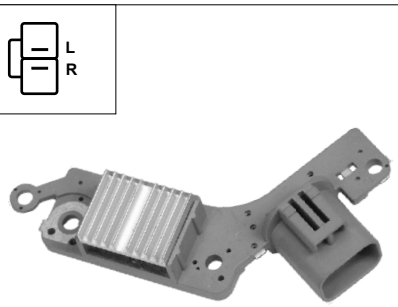

AS ARE5039

ORIGINAL A866X26070 **TRANSPO** IM843 — 24 V
MOBILETRON VR-H2009-77

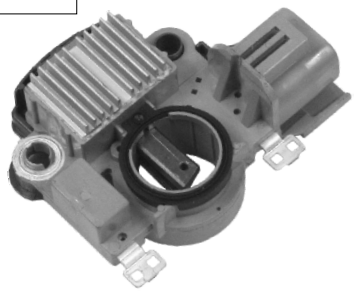

AS ARE5040

ORIGINAL A866X36272 **TRANSPO** IM362 **CARGO** 230043 — 12 V
MOBILETRON VR-H2009-118

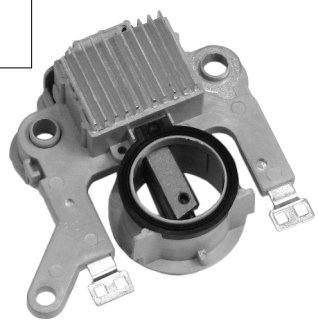

AS ARE5041

ORIGINAL A2T2094B **CARGO** 230502 — 12 V
MOBILETRON VR-H2009-58

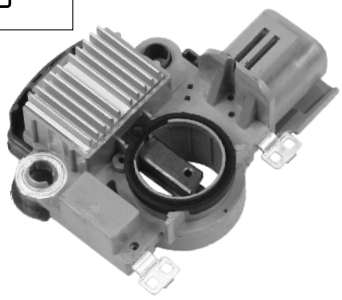

AS ARE5042

ORIGINAL A866X46572 **TRANSPO** IM465 **CARGO** 235665 — 12 V
MOBILETRON VR-H2009-100

AS ARE5043

ORIGINAL TA500C11601 **CARGO** 234620 — 12 V

AS ARE5044

ORIGINAL TA500C09001 **TRANSPO** IY028 **CARGO** 234654 — 12 V
MOBILETRON VR-MD06

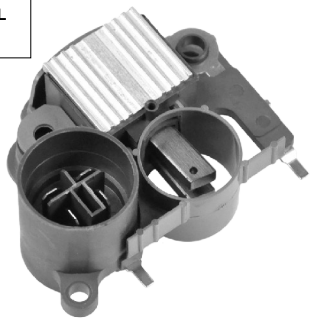

AS ARE5045

ORIGINAL A866T38570 A866X13670 **TRANSPO** IM839 **CARGO** 135064 136648 — 12 V
MOBILETRON VR-H2009-40

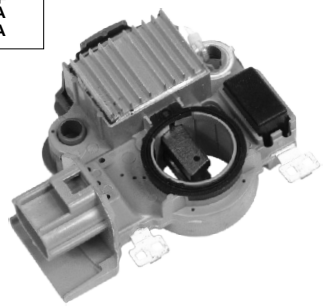

AS ARE5046

for CA1780IR — 12 V

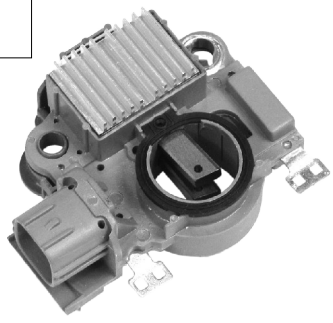

AS ARE5047

ORIGINAL A866X48782 **TRANSPO** IM851 **CARGO** 235278 — 12 V
MOBILETRON VR-H2009-94

Electric conections - page 4

ALTERNATOR REGULATORS
MITSUBISHI

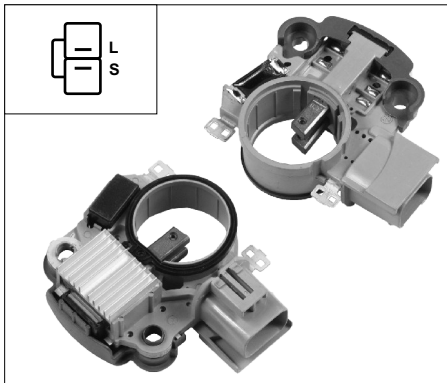

AS ARE5048

ORIGINAL **CARGO** 12 V
A866X41072 **235541**

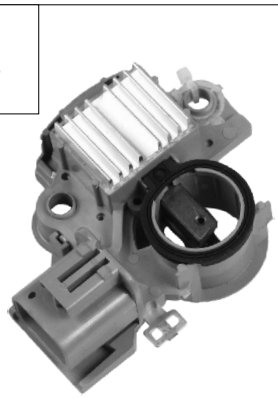

AS ARE5049

12 V

A-Circuit
Voltage Set Point 14.50 V

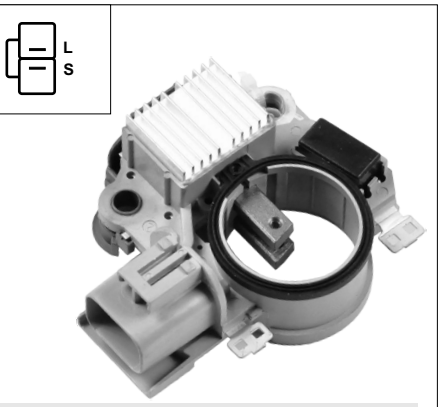

AS ARE5050

24 V

A-Circuit
Voltage Set Point 28.70V

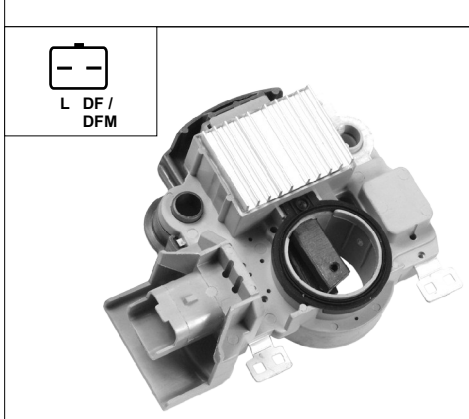

AS ARE5051

ORIGINAL **TRANSPO** **CARGO** 12 V
A866X498 **IM545** **239735**
MOBILETRON
VR-H2009-105

AS ARE5052

ORIGINAL 24 V
A0037A8591

A-Circuit
Voltage Set Point 28.30 V

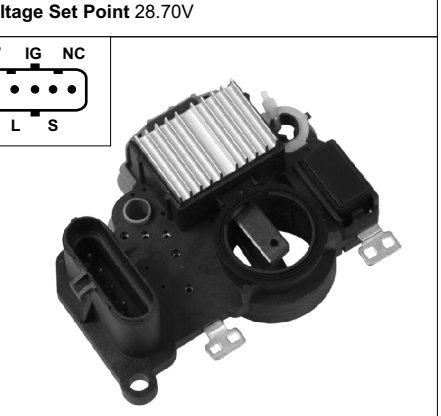

AS ARE5053

A-Circuit 24 V
Voltage Set Point 28.50 V
Soft Start 30 %
Field, Lamp Shorted Circuit Protection
Sense Loss Indication, Under Voltage Indication
Over Voltage Indication, DFM function

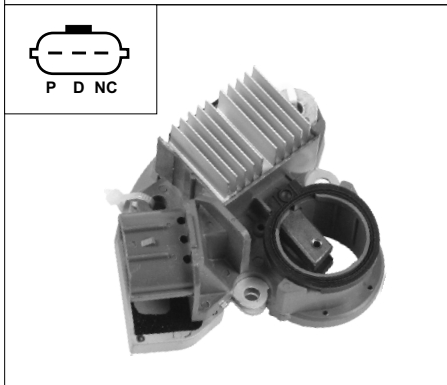

AS ARE5054

ORIGINAL **TRANSPO** 12 V
A866X50572 **IM505**
MOBILETRON
VR-H2009-114

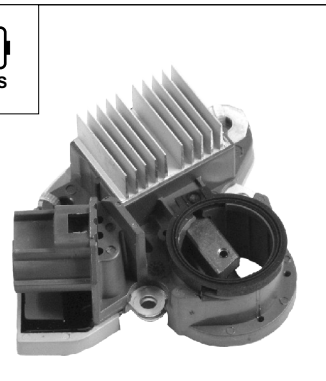

AS ARE5055

ORIGINAL **TRANSPO** 12 V
A866T52970 **IM529**
MOBILETRON
VR-H2009-98

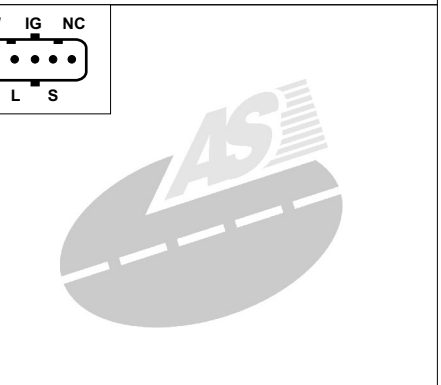

AS ARE5056

for A4TR5894ZT 12 V

MOBILETRON
VR-H2009-132B

ALTERNATOR REGULATORS
NIPPONDENSO

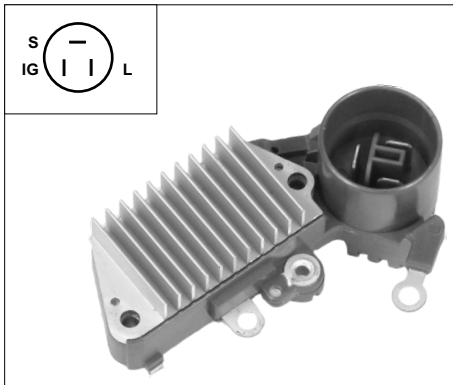

AS ARE6001

ORIGINAL **TRANSPO** **CARGO** 12 V
126000-0340 **IN220** **131459**
126000-0650
MOBILETRON
VR-H2005-4A

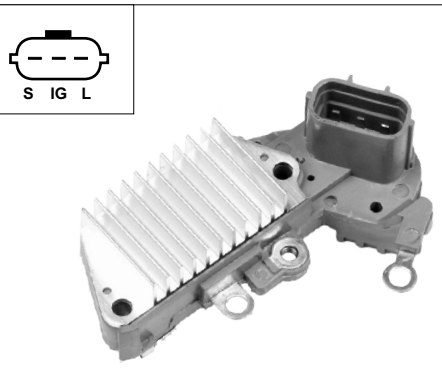

AS ARE6002

ORIGINAL **TRANSPO** **CARGO** 12 V
126000-1580 **IN439** **135734**
126000-1670
MOBILETRON
VR-H2005-31A

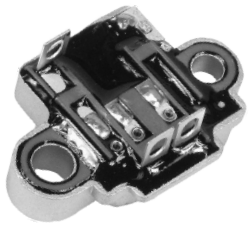

AS ARE6003

ORIGINAL **TRANSPO** **CARGO** 12 V
126000-0520 **IN218** **131460**
MOBILETRON
VR-H2005-11

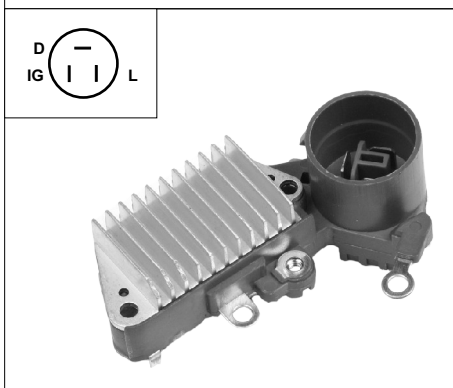

AS ARE6004

ORIGINAL **TRANSPO** **CARGO** 12 V
126000-0430 **IN221** **134447**
MOBILETRON
VR-H2005-5H

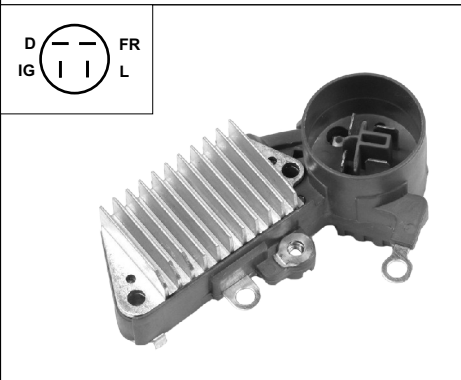

AS ARE6005

ORIGINAL **TRANSPO** **CARGO** 12 V
126000-0570 **IN225** **132831**
MOBILETRON
VR-H2005-8

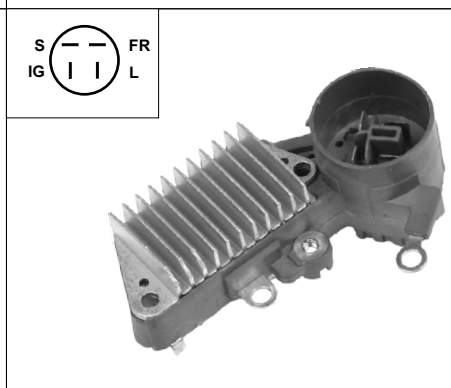

AS ARE6006

ORIGINAL **TRANSPO** **CARGO** 12 V
126000-0540 **IN226** **132645**
MOBILETRON
VR-H2005-9A

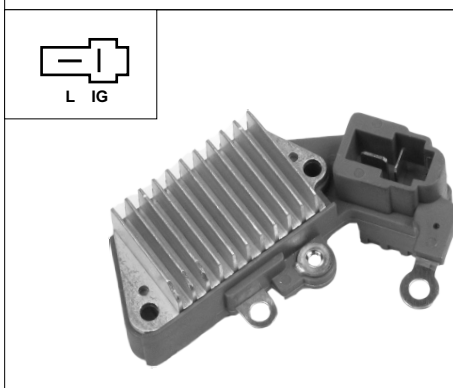

AS ARE6007

ORIGINAL **TRANSPO** **CARGO** 12 V
126000-0371 **IN227** **132646**
MOBILETRON
VR-H2005-14H

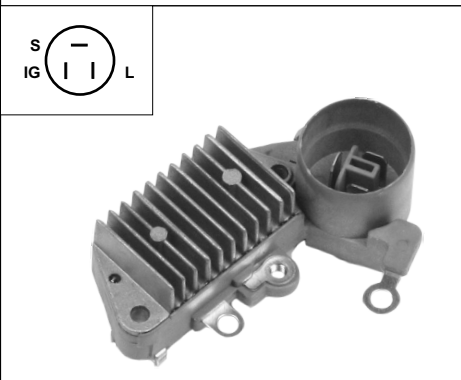

AS ARE6008

ORIGINAL **TRANSPO** **CARGO** 12 V
126000-0550 **IN250** **132855**
MOBILETRON
VR-H2005-23A

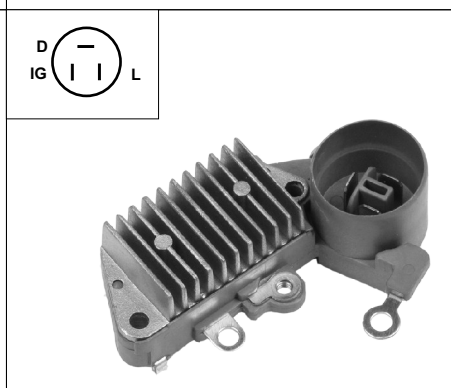

AS ARE6009

ORIGINAL **TRANSPO** **CARGO** 12 V
126000-0880 **IN251** **132860**
MOBILETRON
VR-H2005-24

ALTERNATOR REGULATORS
NIPPONDENSO

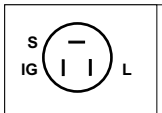

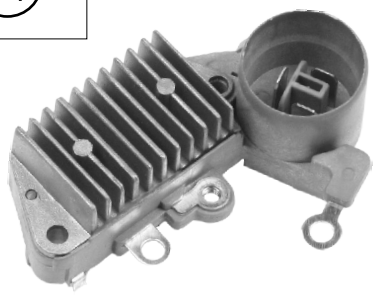

AS ARE6010

ORIGINAL	TRANSPO	CARGO	12 V
126000-7040	IN256	134700	

MOBILETRON
VR-H2005-23DG

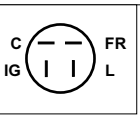

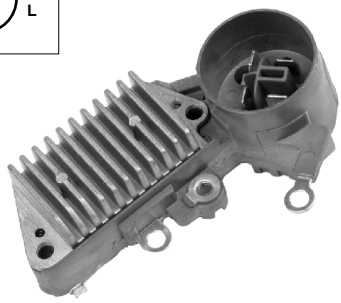

AS ARE6011

ORIGINAL	TRANSPO	CARGO	12 V
126000-1410	IN431	132859	

MOBILETRON
VR-H2005-10

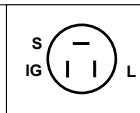

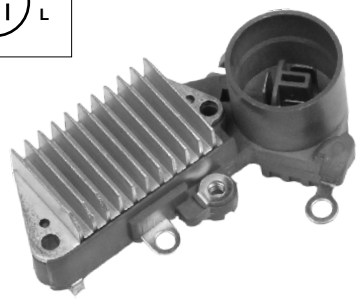

AS ARE6012

ORIGINAL	TRANSPO	CARGO	12 V
126000-1110	IN434	135730	

MOBILETRON
VR-H2005-33A

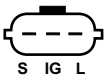

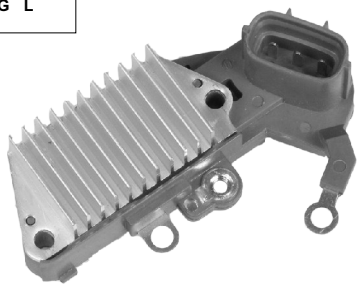

AS ARE6013

ORIGINAL	TRANSPO	CARGO	12 V
126000-1730	IN437	135737	

MOBILETRON
VR-H2005-30A

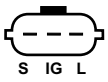

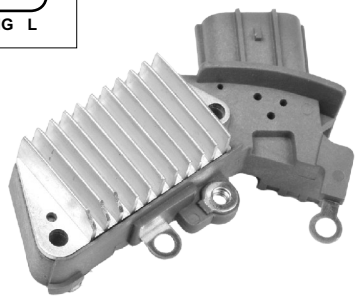

AS ARE6014

ORIGINAL	TRANSPO	CARGO	12 V
126000-1850	IN441	138894	

MOBILETRON
VR-H2005-63A

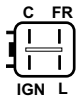

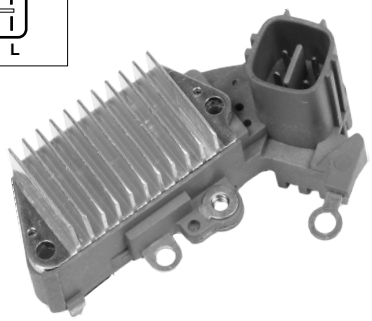

AS ARE6015

ORIGINAL	TRANSPO	CARGO	12 V
126000-2090	IN445	234557	

MOBILETRON
VR-H2005-40

AS ARE6016

ORIGINAL	TRANSPO	CARGO	12 V
026000-0400	IN551	132111	

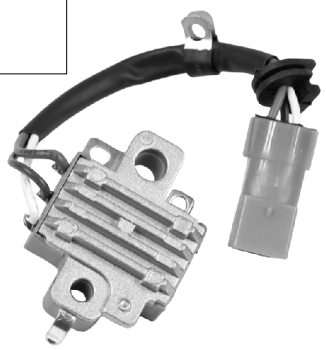

AS ARE6017

ORIGINAL	TRANSPO	CARGO	12 V
126000-1460	IN920	133526 231197	

MOBILETRON
VR-H2005-2

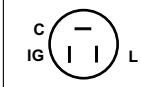

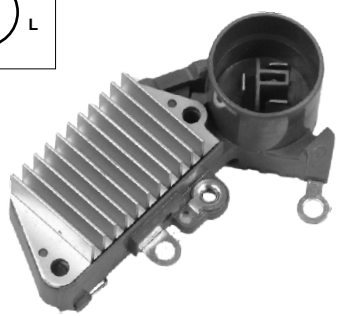

AS ARE6018

ORIGINAL	TRANSPO	CARGO	12 V
126000-0440	IN222	132856	

MOBILETRON
VR-H2005-6H

ALTERNATOR REGULATORS
NIPPONDENSO

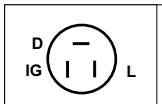

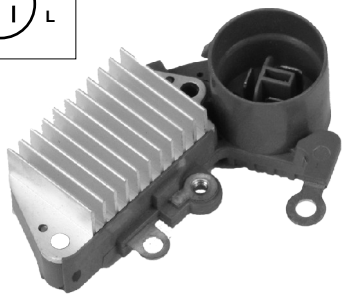

AS ARE6019

ORIGINAL	TRANSPO	CARGO	12 V
126000-0720	IN253	133257	

MOBILETRON
VR-H2005-26A

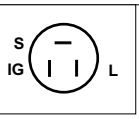

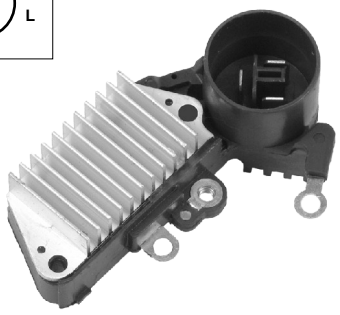

AS ARE6020

ORIGINAL	TRANSPO	CARGO	12 V
126000-1400	IN436	131459	

MOBILETRON
VR-H2005-17A

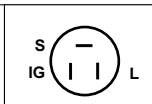

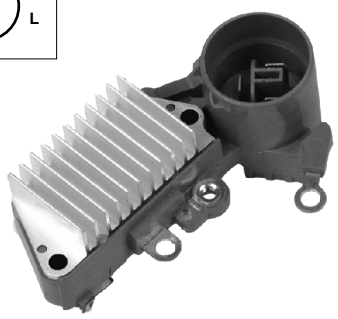

AS ARE6021

ORIGINAL	TRANSPO	CARGO	24 V
126000-7010	IN461	137395	

MOBILETRON
VR-H2005-58

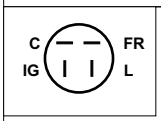

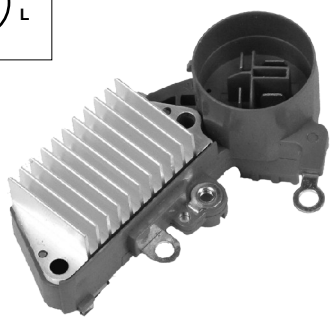

AS ARE6022

ORIGINAL	TRANSPO	CARGO	12 V
126000-0940	IN224	132859	

MOBILETRON
VR-H2005-10

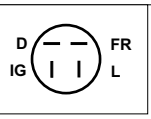

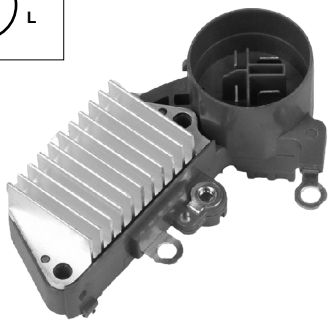

AS ARE6023

ORIGINAL	TRANSPO	CARGO	12 V
126000-1470	IN429	232455	

MOBILETRON
VR-H2005-19A

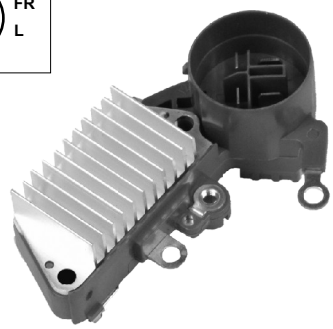

AS ARE6024

ORIGINAL	TRANSPO	CARGO	12 V
126000-1060	IN444	132645	

MOBILETRON
VR-H2005-9A

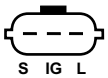

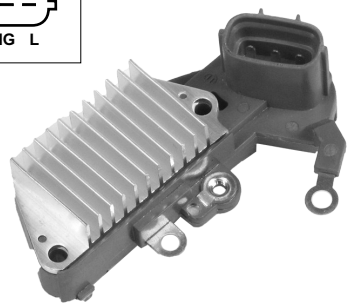

AS ARE6025

ORIGINAL	TRANSPO	CARGO	12 V
126000-7100	IN440	135734	

MOBILETRON
VR-H2005-35

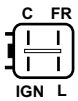

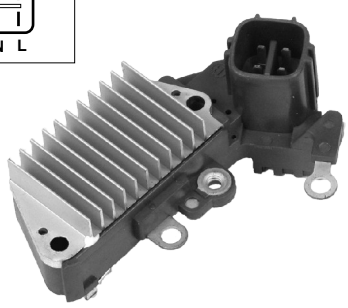

AS ARE6027

ORIGINAL	TRANSPO	CARGO	12 V
126000-2190	IN455	233517	

MOBILETRON
VR-H2005-64A

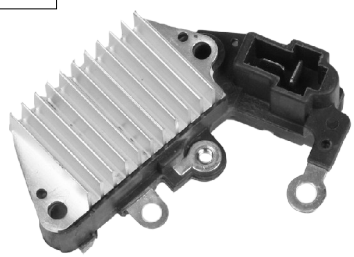

AS ARE6028

ORIGINAL	TRANSPO	CARGO	12 V
126000-0600	IN254	133872	

MOBILETRON
VR-H2005-39

ALTERNATOR REGULATORS
NIPPONDENSO

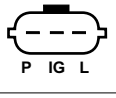

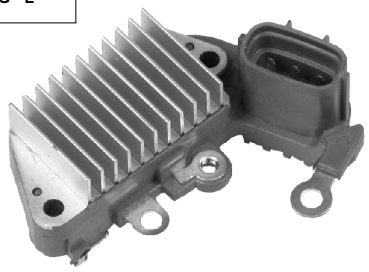

AS ARE6030

ORIGINAL	TRANSPO	CARGO	12 V
126000-1800	IN450	138146	

MOBILETRON
VR-H2005-60

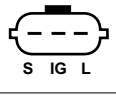

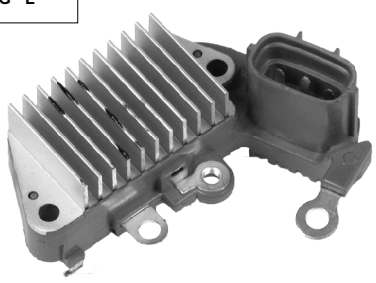

AS ARE6031

ORIGINAL	TRANSPO	CARGO	12 V
126000-1630	IN257	138662	

MOBILETRON
VR-H2005-32A

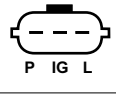

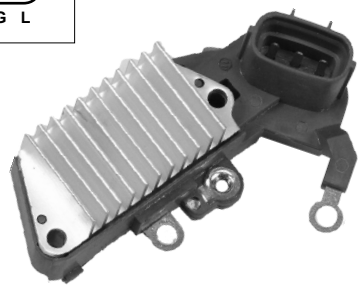

AS ARE6032

ORIGINAL	TRANSPO	CARGO	12 V
126000-1940	IN449	138638	

MOBILETRON
VR-H2005-59

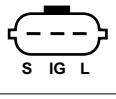

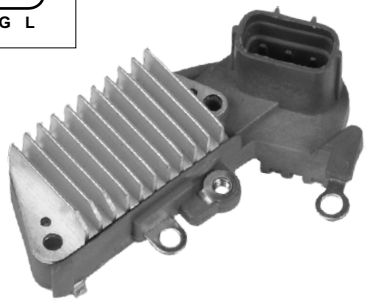

AS ARE6033

ORIGINAL	TRANSPO	CARGO	12 V
126000-1960	IN453	139584	

MOBILETRON
VR-H2005-46A

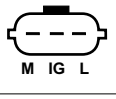

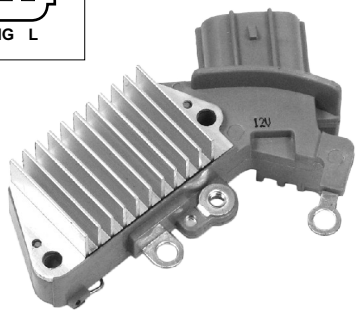

AS ARE6034

ORIGINAL	TRANSPO	CARGO	12 V
126000-3130	IN447	234091	

MOBILETRON
VR-H2005-65

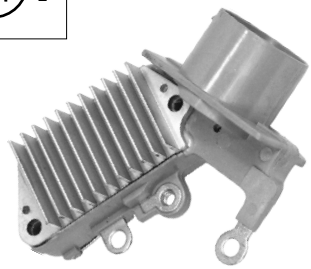

AS ARE6035

ORIGINAL	TRANSPO	CARGO	12 V
126000-1770	IN277	234732	

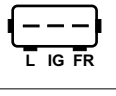

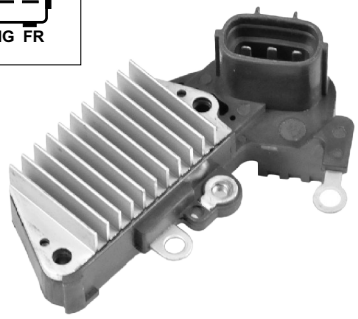

AS ARE6036

ORIGINAL	TRANSPO	CARGO	12 V
126000-2861	IN304	231462	
126000-3040			

MOBILETRON
VR-H2005-62A

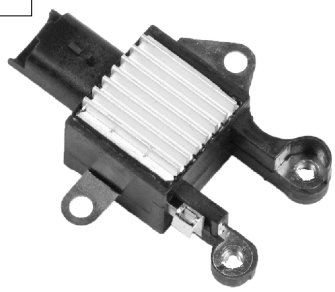

AS ARE6037

ORIGINAL	TRANSPO	CARGO	12 V
N810F01288	IN317	235457	
ST17001			

MOBILETRON
VR-H2005-83

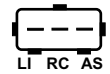

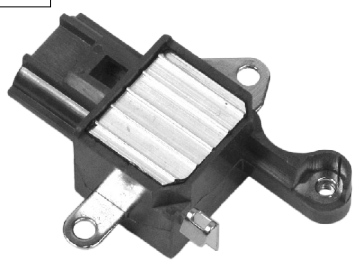

AS ARE6038

ORIGINAL	TRANSPO	CARGO	12 V
126600-3430	IN6343	330843	
126600-3640			

MOBILETRON
VR-H2005-96 **FOR CA1865IR**

ALTERNATOR REGULATORS
NIPPONDENSO

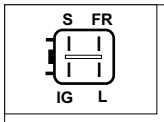

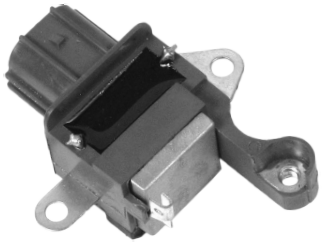

AS ARE6039

ORIGINAL **TRANSPO** **CARGO** 12 V
126600-3010 **IN6301** **236329**
126600-3040
MOBILETRON
VR-H2005-85

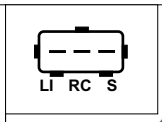

AS ARE6040

ORIGINAL **TRANSPO** **CARGO** 12 V
PCM-01 **IN6601** **237609**
MOBILETRON
VR-H2005-88

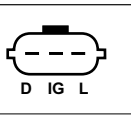

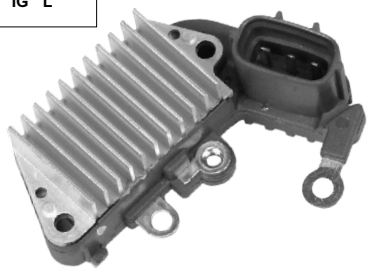

AS ARE6041

ORIGINAL **TRANSPO** 12 V
126000-2490 **IN258**

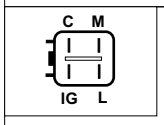

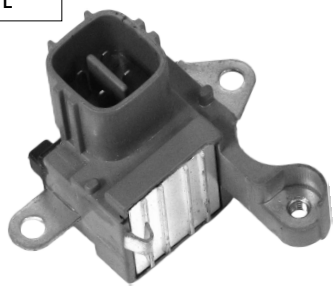

AS ARE6042

12 V

for 104210-3732

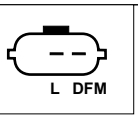

AS ARE6043

A-Circuit 12 V
Voltage Set Point 14.70 V
Soft Start 30 %
Field, Shorted Circuit Protection
Under Voltage Indication
Over Voltage Indication, DFM function

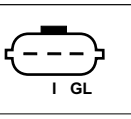

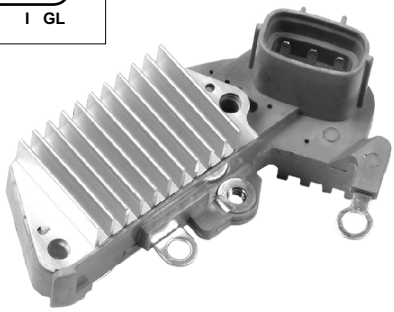

AS ARE6044

ORIGINAL **A**-Circuit 24 V
12600-2320 **Voltage Set Point** 28.50 V
Soft Start 30%
Field, Lamp Shorted Circuit Protection
Under Voltage Indication
Over Voltage Indication

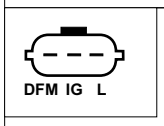

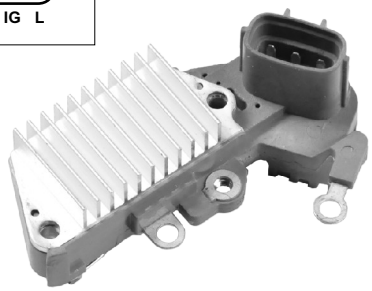

AS ARE6045

A-Circuit 12 V
Voltage Set Point 14.50 V
Soft Start 30%
LRC 5 sec
Field, Shorted Circuit Protection
IG / Sense Open Indication
Under / Over Voltage Indication, 63.5mmMounting

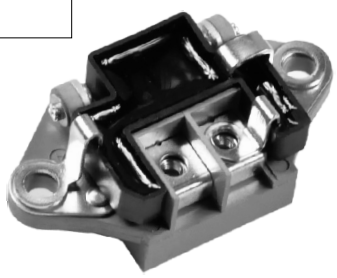

AS ARE6046

ORIGINAL **TRANSPO** **CARGO** 24 V
126000-0380 **IN233** **231060**

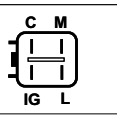

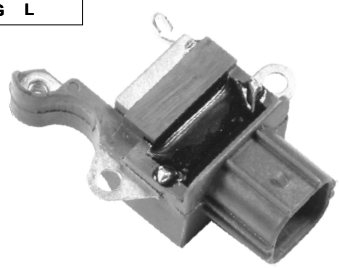

AS ARE6047

ORIGINAL **TRANSPO** **CARGO** 12 V
126600-0140 **IN6335** **237650**
126600-3350
MOBILETRON
VR-H2005-90

Electric conections - page 4

ALTERNATOR REGULATORS
NIPPONDENSO

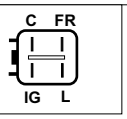

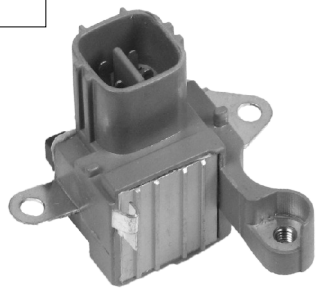

AS ARE6048

ORIGINAL **TRANSPO** 12 V
126600-0040 **IN6004**
126600-0041
MOBILETRON
VR-H2005-99

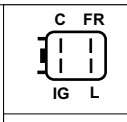

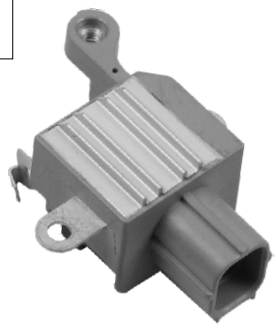

AS ARE6049

ORIGINAL **TRANSPO** 12 V
126600-3660 **IN6366**
MOBILETRON
VR-H2005-148

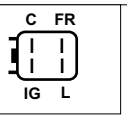

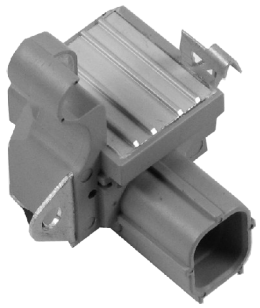

AS ARE6050

12 V

ALTERNATOR REGULATORS
OTHER

AS ARE9001

ORIGINAL **TRANSPO** **CARGO** 12 V
940038111 IR673 131209
21229189
MOBILETRON
VR-LD160

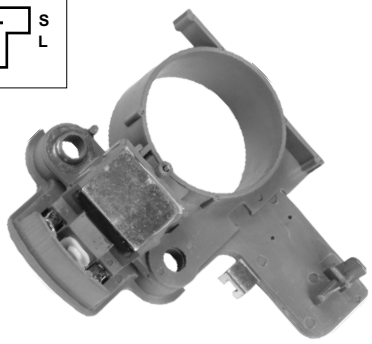

AS ARE9002

TRANSPO **CARGO** 12 V
IY422 139669
MOBILETRON
VR-MD01

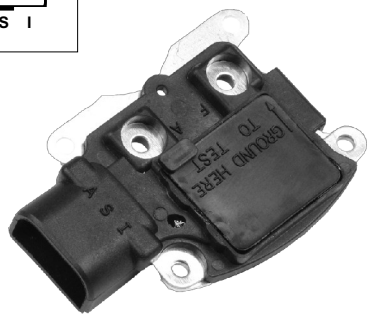

AS ARE9003

ORIGINAL **TRANSPO** **CARGO** 12 V
E63F-10316AB F784 131907
MOBILETRON
VR-F784H

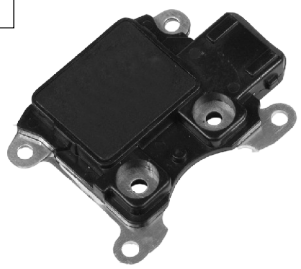

AS ARE9004

ORIGINAL **TRANSPO** **CARGO** 12 V
F3AZ-10316A F785 135854
MOBILETRON
VR-F811

AS ARE9005

ORIGINAL **TRANSPO** **CARGO** 12 V
E9DF-10316AA F794 136230
MOBILETRON
VR-F786H

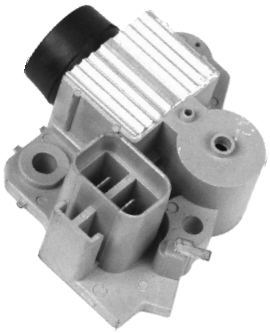

AS ARE9006

ORIGINAL **TRANSPO** **CARGO** 12 V
TA500C02401 IY058 138204
MOBILETRON
VR-H2009-86

AS ARE9007

ORIGINAL **TRANSPO** **CARGO** 12 V
AER1510 IK401 131811
MOBILETRON
VR-IK019

AS ARE9008

ORIGINAL **TRANSPO** **CARGO** 12 V
AER1514 IK543 139513
MOBILETRON
VR-IK149

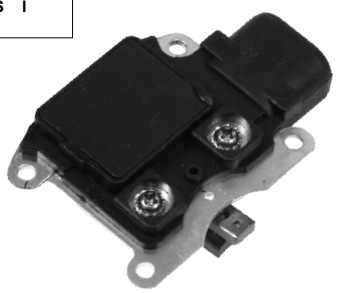

AS ARE9009

ORIGINAL **TRANSPO** **CARGO** 12 V
E43Z10316A F784B 131907
MOBILETRON
VR-F784H

ALTERNATOR REGULATORS
OTHER

AS ARE9010

ORIGINAL **TRANSPO** **CARGO** 12 V
F5RU-10316BA F786 138185
MOBILETRON
VR-F818

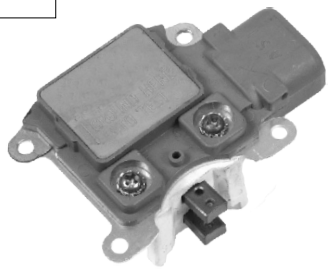

AS ARE9011

ORIGINAL **TRANSPO** **CARGO** 12 V
E9DF-10316AA F794B 136230
MOBILETRON
VR-F786BH

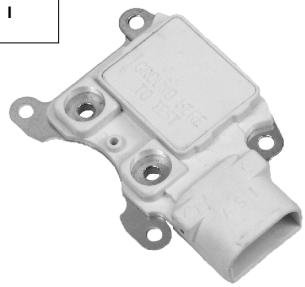

AS ARE9012

ORIGINAL **TRANSPO** **CARGO** 12 V
F4ZZ-10316A F795 232415
MOBILETRON
VR-F814

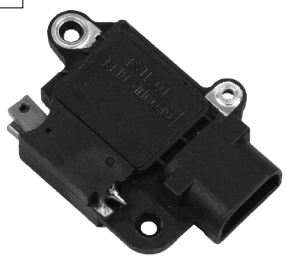

AS ARE9013

ORIGINAL **TRANSPO** **CARGO** 12 V
F50U-100359AA F796 138663
MOBILETRON
VR-F815

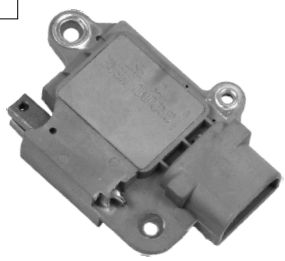

AS ARE9014

ORIGINAL **TRANSPO** **CARGO** 12 V
F6DY-10316A F798 230066
MOBILETRON
VR-F817

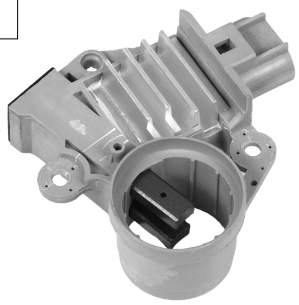

AS ARE9015

ORIGINAL **TRANSPO** **CARGO** 12 V
F8WU-10C359AB F600 230065
MOBILETRON
VR-F900

AS ARE9016

ORIGINAL **TRANSPO** **CARGO** 12 V
XS7U-10C359AC F602 233233
MOBILETRON
VR-F920

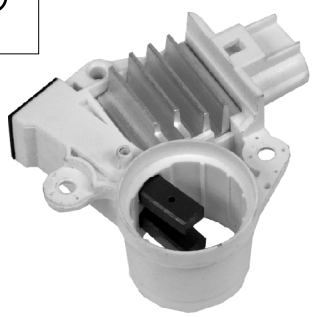

AS ARE9017

ORIGINAL **TRANSPO** **CARGO** 12 V
XS7U-10C359BA F603 233775
MOBILETRON
VR-F930

AS ARE9018

ORIGINAL **TRANSPO** **CARGO** 12 V
44390134291 MP291 133417
MOBILETRON
VR-MP134

ALTERNATOR REGULATORS
OTHER

AS ARE9019

ORIGINAL	TRANSPO	CARGO	24 V
44390134731	MP293	137357	

L S

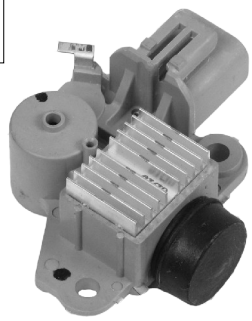

AS ARE9020

ORIGINAL	TRANSPO	CARGO	12 V
E9DF-10316AA	IY094	231425	

MOBILETRON
VR-F786BH

L S

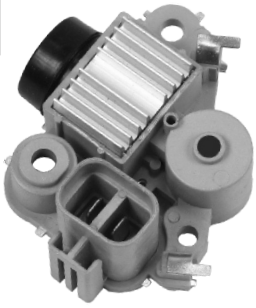

AS ARE9021

ORIGINAL	TRANSPO	CARGO	12 V
M903	IY903	234654	

MOBILETRON
VR-MD06L

L IG

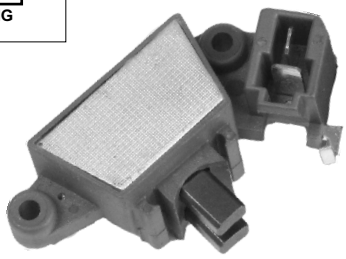

AS ARE9022

TRANSPO	12 V
IY510	

R L

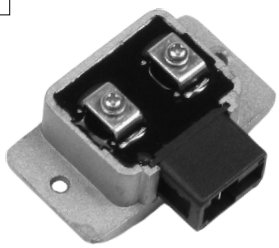

AS ARE9023

MOBILETRON	CARGO	12 V
VR-K01	139469	

L IG

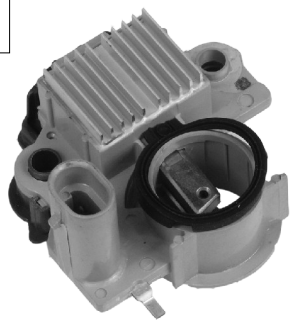

AS ARE9024

REPLACING	CARGO	12 V
DAEWOO MATIZ	235205	

L S

AS ARE9025

MOBILETRON	TRANSPO	12 V
VR-H2009-116	IY794	

FR SIG A
LI RC A

AS ARE9026

MOBILETRON	TRANSPO	CARGO	12 V
VR-VN001	F611	235601	

For alternator: CA1638IR

L DFM

AS ARE9027

CARGO	12 V
236563	

DELPHI 190A WATERCOOLED

Electric conections - page 4

ALTERNATOR REGULATORS
OTHER

AS ARE9028

ORIGINAL **CARGO** 12 V
0138841 **234480**

AS ARE9029

NIKKO 12 V

A-Circuit
Voltage Set Point 14.40 V

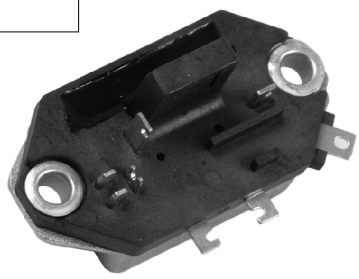

AS ARE9030

NIKKO 24 V
KM155

A-Circuit
Voltage Set Point 29.20 V

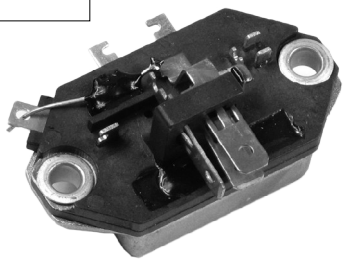

AS ARE9031

ORIGINAL **CARGO** 24 V
7-44000-0900 **135321**
KM156

A-Circuit
Voltage Set Point 29.20 V

AS ARE9032

ORIGINAL **CARGO** 24 V
0-37519-0150 **234999**
0-37519-0151

A-Circuit
Voltage Set Point 28.60 V

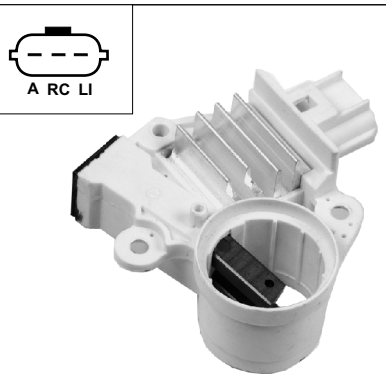

AS ARE9033

ORIGINAL **TRANSPO** **CARGO** 12 V
4L3U-10C359-AA **F601** **233232**
MOBILETRON
VR-F910

AS ARE9034

ORIGINAL **TRANSPO** 12 V
VP4L1U-10C359-AA **F606**
MOBILETRON
VR-F931

AS ARE9035

MOBILETRON **TRANSPO** 12 V
VR-VN002 **F610**

REGULATORS + RECTIFIERS
HITACHI

AS ARR2001

Set for: 12 V
LR1100-502E
LR1100-502G

AS ARR2002

Set for: 12 V
LR170-505
LR170-505B

ALTERNATOR ROTORS
BOSCH

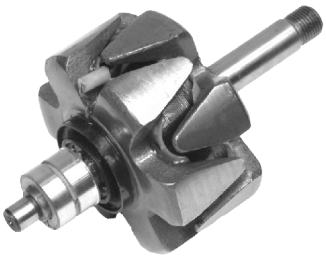

AS AR0001

ORIGINAL **CARGO** 24 V
1124035077 **133444** 55 A

O.D. 101.00, **Shaft D.** 17, **Shaft L.** 172.45, **Thread** M16-1.5

AS AR0002

ORIGINAL **CARGO** 24 V
1124035226 **136829** 80 A

O.D. 103.00, **Shaft D.** 17, **Shaft L.** 170.80, **Thread** M16-1.5

AS AR0003

ORIGINAL **CARGO** 24 V
1124035057 **133559** 55 A

O.D. 100.00, **Shaft D.** 17, **Shaft L.** 160.70, **Thread** M16-1.5

AS AR0004

ORIGINAL **CARGO** 12 V
1124034167 **131948** 65 A

O.D. 89.00, **Shaft D.** 17, **Shaft L.** 151.80, **Thread** M16-1.5

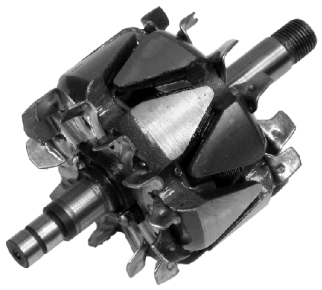

AS AR0005

ORIGINAL **CARGO** 12 V
1124034407 **138039** 90 A

O.D. 93.30, **Shaft D.** 17, **Shaft L.** 158.00, **Thread** M16-1.5

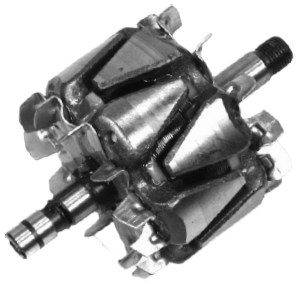

AS AR0006

ORIGINAL **CARGO** 12 V
1124034441 **136387** 120 A

O.D. 103.20, **Shaft D.** 17, **Shaft L.** 160.25, **Thread** M16-1.5

AS AR0007

ORIGINAL **CARGO** 12 V
1124034651 **138251** 95 A
1124034652

O.D. 93.30, **Shaft D.** 17.00, **Shaft L.** 154.00, **Thread** M16-1.5

AS AR0008

ORIGINAL **CARGO** 12 V
1124034931 **137787** 80 A
1124034932

O.D. 93.00, **Shaft D.** 17.00, **Shaft L.** 153.00, **Thread** M16-1.5

AS AR0009

ORIGINAL **CARGO** 12 V
1124034452 **137331** 90 A
1124034467

O.D. 93.00, **Shaft D.** 17.00, **Shaft L.** 153.00, **Thread** M16-1.5

ALTERNATOR ROTORS
BOSCH

AS AR0010

ORIGINAL **CARGO** 12 V
F00M312002 **330113** 150 A
F00M312012

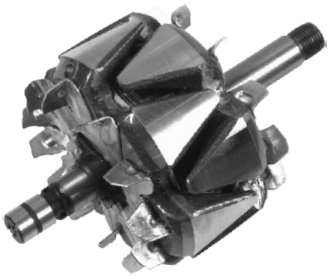

AS AR0011

ORIGINAL **CARGO** 24 V
1124035530 **234523** 90 A
1124035543

O.D. 111.45, **Shaft D.** 17.00, **Shaft L.** 177.00, **Thread** M16-1.5

AS AR0012

ORIGINAL **CARGO** 12 V
F00M111604 **233854** 75 A
F00M111609

O.D. 88.85, **Shaft D.** 17, **Shaft L.** 151.00, **Thread** M16-1.5

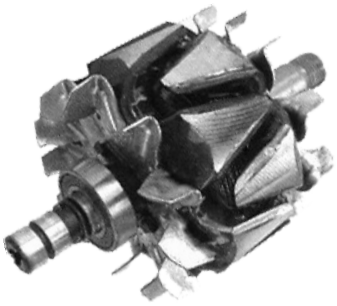

AS AR0013

ORIGINAL **CARGO** 12 V
F00M121611 **230849** 90 A
F00M121622

O.D. 93.00, **Shaft D.** 17, **Shaft L.** 153.00, **Thread** M16-1.5

AS AR0014

ORIGINAL **CARGO** 12 V
F00M131629 **235564** 200 A

O.D. 111.30, **Shaft D.** 17, **Shaft L.** 160.00, **Thread** M16-1.5

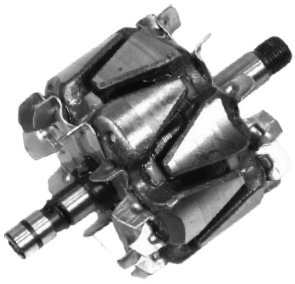

AS AR0015

ORIGINAL **CARGO** 12 V
F00M131615 **235219** 150 A

O.D. 111.30 Shaft D. 17, **Shaft L. 162**, **Thread** M16-1.5

ALTERNATOR ROTORS
DELCO/HITACHI

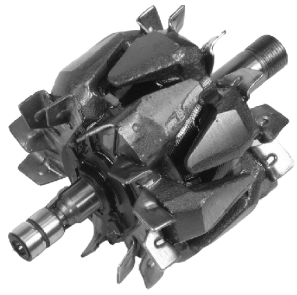

AS AR1001

ORIGINAL **CARGO** 12 V
10475748 **138052** 100/105 A
10489033

O.D. 96.00, **Shaft D.** 17, **Shaft L.** 149.00,
Thread M17-1.25

AS AR1002

ORIGINAL **CARGO** 12 V
10475022 **139402** 70/100 A

O.D. 96.00, **Shaft D.** 17, **Shaft L.** 153.00,
Thread M17-1.25

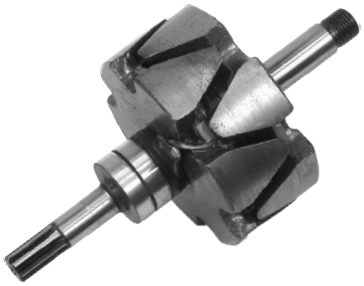

AS AR2001

ORIGINAL **CARGO** 12 V
L170-81002 **135503** 70 A
L170-61002

O.D. 103.00, **Shaft D.** 17, **Shaft L.** 191.00,
Thread M17-1.5, **No. of splines** 8

AS AR2002

ORIGINAL **CARGO** 12 V
L160-31007 **135504** 70 A

O.D. 103.30, **Shaft D.** 17, **Shaft L.** 191.00,
Thread M16-1.5, **No. of splines** 16

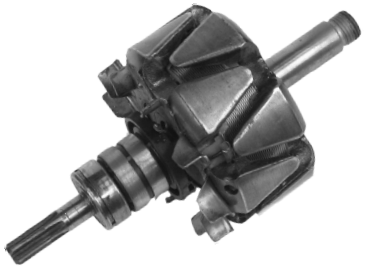

AS AR2003

ORIGINAL **CARGO** 12 V
L170G-41002 **230055** 70 A

O.D. 98.00, **Shaft D.** 17, **Shaft L.** 196.00,
Thread M16-1.5, **No. of splines** 6

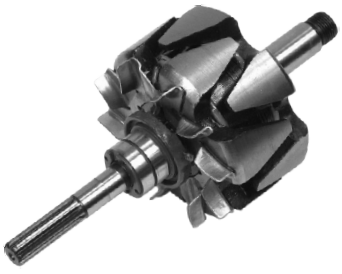

AS AR2004

For alternator: LR260-512 24 V
(AS A2019) 75 A

O.D. 117.00, **Shaft D.** 20, **Shaft L.** 233.00,
Thread M18-1.5, **No. of splines** 8

ALTERNATOR ROTORS
VALEO

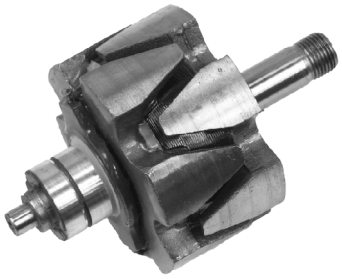

AS AR3001

ORIGINAL	CARGO	
590625	133003	12 V 70 A

O.D. 89.50, **Shaft D.** 17, **Shaft L.** 149.00, **Thread** M17-1.5

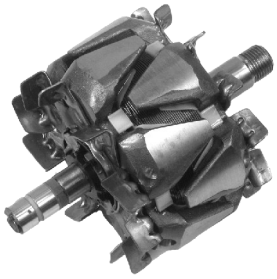

AS AR3002

ORIGINAL	CARGO	
593566	232766	12 V 120 A

O.D. 105.20, **Shaft D.** 17, **Shaft L.** 146.50, **Thread** M16-1.5

AS AR3003

ORIGINAL	CARGO	
593275	230722	24 V 90 A

O.D. 110.50, **Shaft D.** 17, **Shaft L.** 151.50, **Thread** M16-1.5

AS AR3004

ORIGINAL	CARGO	
593569	235366	12 V 140 A

O.D. 105.30, **Shaft D.** 17, **Shaft L.** 149.00, **Thread** M16-1.5

AS AR3005

ORIGINAL	CARGO	
593147	137580	12 V 95/120 A

O.D. 98.50, **Shaft D.** 17, **Shaft L.** 152.00, **Thread** M16-1.5

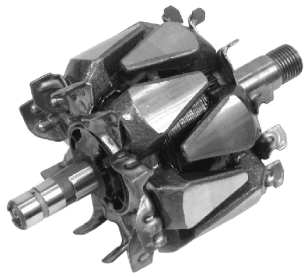

AS AR3006

ORIGINAL	CARGO	
593144	138116	12 V 80 A

O.D. 95.00, **Shaft D.** 17, **Shaft L.** 152.00, **Thread** M16-1.5

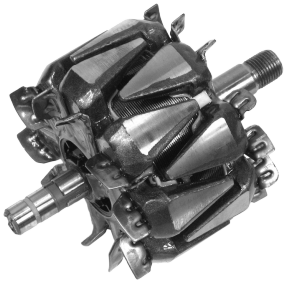

AS AR3007

ORIGINAL	CARGO	
593285	139447	12 V 150 A

O.D. 110.00, **Shaft D.** 17, **Shaft L.** 155.50, **Thread** M16-1.5

AS AR3008

ORIGINAL	CARGO	
592727	133587	24 V 55 A

O.D. 99.40, **Shaft D.** 17.00, **Shaft L.** 164.50, **Thread** M17-1.5

ALTERNATOR ROTORS
MAGNETI/MITSUBISHI/OTHER

AS AR4001

ORIGINAL **CARGO** 12 V
54206600 **133845** 55 A
UEB104

O.D. 89.50, **Shaft D.** 17, **Shaft L.** 202.00, **Thread** 9/16", **No. of splines** 18

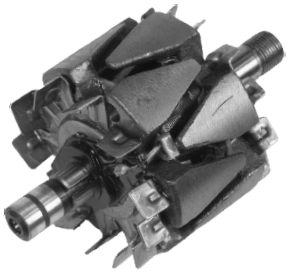

AS AR4002

ORIGINAL **CARGO** 12 V
83610601 **136674** 65/85 A

O.D. 89.00, **Shaft D.** 17, **Shaft L.** 153.00, **Thread** M17-1.5

AS AR4003

ORIGINAL **CARGO** 12 V
83600011 **131643** 55 A
83603731

O.D. 89.00, **Shaft D.** 17, **Shaft L.** 142.00, **Thread** M14-1.5

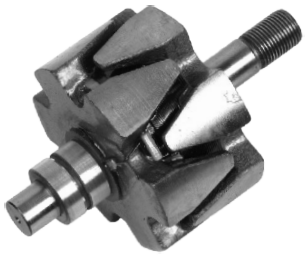

AS AR4004

ORIGINAL **CARGO** 24 V
54208671 **136982** 30 A

O.D. 89.50, **Shaft D.** 17, **Shaft L.** 143.70, **Thread** M17-1.5

AS AR4005

ORIGINAL **CARGO** 12 V
74988801 **131944** 55 A
074988801010

O.D. 89.00, **Shaft D.** 17.00, **Shaft L.** 156.00, **Thread** M14-1.5

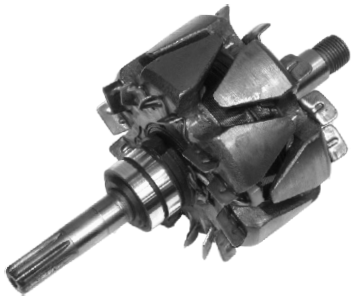

AS AR5001

ORIGINAL **CARGO** 12 V
A880X67970 **138622** 65/75 A

O.D. 99.50, **Shaft D.** 17, **Shaft L.** 188.00, **Thread** M17-1.5, **No. of splines** 8

AS AR9001

For alternator: CA1638IR 12 V
AS A9011 90 A

AS AR9002

MAGNETON **CARGO** 12 V
0138721 **234587** 120 A

O.D. 93.00, **Shaft D.** 17.00, **Shaft L.** 165.00, **Thread** M16-1.5

ALTERNATOR SLIP RINGS

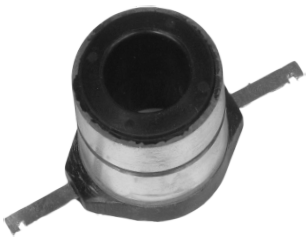

AS ASL9001

IKA	CARGO
120250	131814

O.D. 30.00, **I.D.** 17.00, **L.** 28.00

AS ASL9002

IKA	CARGO
120260	131815

O.D. 30.00, **I.D.** 15.00, **L.** 27.00

AS ASL9003

IKA	CARGO
120410	131817

O.D. 25.00, **I.D.** 9.00

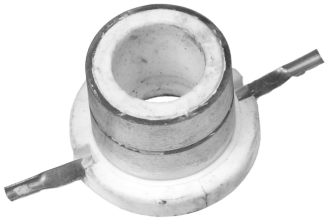

AS ASL9004

IKA	CARGO
120440	132642

O.D. 27.00, **I.D.** 17.00, **L.** 24.00

AS ASL9005

IKA	BOSCH	CARGO
120010	1124304007	133401

O.D. 32.00, **I.D.** 17.00, **L.** 22.30

AS ASL9006

IKA	BOSCH	CARGO
120020	1124303001	133402

O.D. 28.00, **I.D.** 17.00, **L.** 22.10

AS ASL9007

IKA	CARGO
120420	134492

O.D. 30.00, **I.D.** 17.00, **L.** 29.00

AS ASL9008

IKA	CARGO
120390	135172

O.D. 16.00, **I.D.** 7.00, **L.** 52.10

AS ASL9009

IKA	CARGO
120470	135173

O.D. 14.90, **I.D.** 7.90/8.75, **L.** 24.00

ALTERNATOR SLIP RINGS

AS ASL9010

IKA	CARGO
120430	135179

O.D. 14.90, **I.D.** 6.80/8.85, **L.** 27.80

AS ASL9011

IKA	FORD	CARGO
120100	E90F-10328-AA	136305

O.D. 26.85, **I.D.** 13.38, **L.** 34.70

AS ASL9012

IKA	DELCO	CARGO
120950	10475751	136682

O.D. 14.70, **I.D.** 7.10, **L.** 20.30

AS ASL9013

CARGO
138421

O.D. 14.30, **I.D.** 6.6/8.4, **L.** 27.80

AS ASL9014

IKA	CARGO
120890	138441

O.D. 16.00, **I.D.** 6.80, **L.** 46.50

AS ASL9015

IKA	CARGO
120200	230090

O.D. 14.90, **I.D.** 6.60/8.85, **L.** 48.30

AS ASL9016

CARGO
131219

O.D. 26.00, **I.D.** 13.30, **L.** 25.00

AS ASL9017

CARGO
133055

O.D. 26.50, **I.D.** 15.00, **L.** 22.60

AS ASL9018

CARGO
233937

O.D. 16.00, **I.D.** 6.00, **L.** 34.00

ALTERNATOR SLIP RINGS

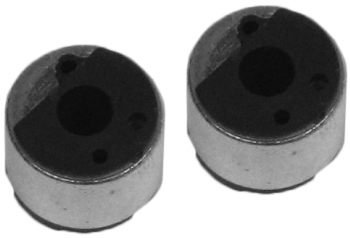

AS ASL9019

CARGO
237323

O.D. 14.00, **I.D.** 5.00, **L.** 21.00

AS ASL9020

BOSCH **CARGO**
1124304018 **136000**

O.D. 32.70, **I.D.** 20.00, **L.** 22.30

AS ASL9021

for 0121615002 **CARGO**
239930

O.D. 13.40, **I.D.** 5.10, **L.** 42.30

ALTERNATOR STATORS
BOSCH

AS AS0001

ORIGINAL **CARGO** 24 V
1125045152 **136037** 80 A
1125045165

O.D. 142.10, **I.D.** 103.60, **H.** 28.80,
No. of leads 4

AS AS0002

ORIGINAL **CARGO** 12 V
1125045012 **130101** 55 A
1125045042

O.D. 125.00 **I.D.** 89.00 **H.** 23.60
No. of leads 3

AS AS0003

ORIGINAL **CARGO** 24 V
1125045105 **131045** 55 A

O.D. 137.60, **I.D.** 100.80, **H.** 23.80,
No. of leads 4

AS AS0004

ORIGINAL **CARGO** 12 V
1125045053 **132354** 70 A

O.D. 125.10, **I.D.** 89.00, **H.** 26.20,
No. of leads 3

AS AS0005

ORIGINAL **CARGO** 24 V
1125047004 **135998** 120 A

O.D. 166.00, **I.D.** 125.80, **H.** 45.00,
No. of leads 3

AS AS0006

ORIGINAL **CARGO** 24 V
1125045028 **130105** 45 A

O.D. 125.00, **I.D.** 89.45, **H.** 23.55,
No. of leads 3

AS AS0007

ORIGINAL **CARGO** 12 V
1125045212 **135904** 90 A

O.D. 128.00, **I.D.** 94.00, **H.** 32.20,
No. of leads 6

AS AS0008

ORIGINAL **CARGO** 12 V
1125045216 **136346** 90 A

O.D. 127.60, **I.D.** 94.30, **H.** 32.40,
No. of leads 6

AS AS0009

ORIGINAL **CARGO** 24 V
F00M130113 **235756** 100 A

O.D. 142.00, **I.D.** 111.87, **H.** 35.49,
No. of leads 6

ALTERNATOR STATORS
BOSCH

AS AS0010

ORIGINAL **CARGO** 24 V
F00M130116 **239769** 110 A

O.D. 149.00, **I.D.** 113.00, **H.** 35.00,
No. of leads 6

AS AS0011

ORIGINAL **CARGO** 12 V
1124045119 **132091** 90 A
1125045102

O.D. 138.00, **I.D.** 101.00, **H.** 24.00,
No. of leads 4

AS AS0012

ORIGINAL **CARGO** 12 V
1125045229 **136702** 80 A

O.D. 127.70, **I.D.** 94.00, **H.** 27.25,
No. of leads 6

AS AS0013

ORIGINAL **CARGO** 12 V
F00M120104 **230620** 90 A

O.D. 133.00, **I.D.** 93.50, **H.** 31.30,
No. of leads 6

AS AS0014

ORIGINAL **CARGO** 12 V
F00M120111 **233557** 80/100 A
F00M120120

O.D. 124.90, **I.D.** 93.50, **H.** 33.20,
No. of leads 6

AS AS0015

ORIGINAL **CARGO** 12 V
F00M310100 **330114** 150 A
F00M310102

AS AS0016

ORIGINAL **CARGO** 12 V
F00M110110 **230971** 75 A

O.D. 124.00, **I.D.** 89.25, **H.** 31.30,
No. of leads 6

AS AS0017

ORIGINAL 12 V
F00M120130 100 A

O.D. 132.00, **I.D.** 95.00, **H.** 31.00,
No. of leads 6

AS AS0018

ORIGINAL **CARGO** 12 V
F00M120102 **230181** 90 A
F00M120107

O.D. 132.90, **I.D.** 93.85, **H.** 30.95,
No. of leads 6

ALTERNATOR STATORS
BOSCH/DELCO

AS AS0019

ORIGINAL **CARGO** 12 V
F00M130126 **235552** 200 A

O.D. 145.00, **I.D.** 112.00, **H.** 35.00,
No. of leads 6

AS AS0020

ORIGINAL 12 V
F00M130111 150 A

AS AS0021

ORIGINAL **CARGO** 12 V
F00M120126 **235580** 110 A

O.D. 125.20, **I.D.** 94.00, **H.** 32.00,
No. of leads 6

AS AS1001

ORIGINAL **CARGO** 12 V
10475030 **137052** 100/105 A
10475450

O.D. 129.90, **I.D.** 96.50, **H.** 25.30,
No. of leads 3

ALTERNATOR STATORS
HITACHI/VALEO

AS AS2001

ORIGINAL	CARGO	
L170-12001	134515	12 V 70 A

O.D. 135.00, **I.D.** 104.00, **H.** 22.30,
No. of leads 3

AS AS2002

ORIGINAL	CARGO	
L170-22002	136262	12 V 70 A

O.D. 139.00, **I.D.** 104.00, **H.** 22.00,
No. of leads 3

AS AS2003

ORIGINAL	CARGO	
L170G-9200	138188	12 V 70 A

O.D. 125.70, **I.D.** 98.50, **H.** 22.00,
No. of leads 3

AS AS2004

for LR260-512		24 V 75 A

O.D. 140, **I.D.** 108, **H.** 33,
No. of leads 4

AS AS2005

	CARGO	12 V
	234729	100 A

O.D. 140.00, **I.D.** 108.00, **H.** 22.00,
No. of leads 4

AS AS2006

ORIGINAL	CARGO	
L1100G-1200	230130	12 V 100 A

O.D. 140.00, **I.D.** 107.50, **H.** 22.70,
No. of leads 4

AS AS3001

ORIGINAL	CARGO	
592834	135788, 239514	12 V 60/70 A

O.D. 116.20, **I.D.** 89.30, **H.** 29.50,
No. of leads 6

AS AS3002

ORIGINAL	CARGO	
592826	133002	12 V 75 A

O.D. 126.90, **I.D.** 89.20, **H.** 29.30,
No. of leads 3

AS AS3003

ORIGINAL	CARGO	
101518	131052	24 V 55 A

O.D. 135.90, **I.D.** 99.20, **H.** 29.10,
No. of leads 3

ALTERNATOR STATORS
VALEO

AS AS3004

ORIGINAL	CARGO	
102778	**132378**	12 V 65 A

O.D. 126.80, **I.D.** 89.30, **H.** 25.80,
No. of leads 3

AS AS3005

ORIGINAL	CARGO	
592832	**135533**	12 V 90/100 A

O.D. 127.00, **I.D.** 95.90, **H.** 30.70,
No. of leads 6

AS AS3006

ORIGINAL	CARGO	
100273	**131982**	12 V 80 A

O.D. 135.80, **I.D.** 99.50, **H.** 27.90,
No. of leads 3

AS AS3007

ORIGINAL	CARGO	
593581	**233713**	12 V 120 A

O.D. 138.00, **I.D.** 106.00, **H.** 30.00,
No. of leads 3

AS AS3008

ORIGINAL	CARGO	
593281	**234674**	24 V 90 A

O.D. 142.50, **I.D.** 111.00, **H.** 30.00,
No. of leads 3

AS AS3009

ORIGINAL	CARGO	
593591	**235569**	12 V 140 A

O.D. 135.00, **I.D.** 106.00, **H.** 29.90,
No. of leads 3

AS AS3010

ORIGINAL	CARGO	
593158	**137581**	12 V 95 A

O.D. 127.80, **I.D.** 98.10, **H.** 29.70,
No. of leads 6

AS AS3011

	CARGO	
	235338	12 V 150 A

O.D. 135.00, **I.D.** 106.00, **H.** 33.00,
No. of leads 3

AS AS3012

ORIGINAL	CARGO	
592831	**230272**	12 V 80 A

O.D. 127.00, **I.D.** 95.60, **H.** 30.70,
No. of leads 6

ALTERNATOR STATORS
VALEO

AS AS3013

CARGO **for SG15S030** 12 V
239018 150 A

O.D. 143.00, **I.D.** 111.00, **H.** 30.00
No. of leads 3

AS AS3014

ORIGINAL **CARGO** **for SG15S032** 12 V
593588 **235089** 150 A

O.D. 143.00, **I.D.** 111.00, **H.** 30.00
No. of leads 3

ALTERNATOR STATORS
MAGNETI MARELLI/LUCAS

AS AS4001

ORIGINAL	CARGO	
74986521	**131977**	12 V 65 A

O.D. 125.60, **I.D.** 88.90, **H.** 27.00,
No. of leads 3

AS AS4002

ORIGINAL	CARGO	
83617801	**139956**	12 V 65 A

O.D. 118.20, **I.D.** 92.00, **H.** 30.80,
No. of leads 3

AS AS4003

ORIGINAL	CARGO	
54205306	**133694**	12 V 65/75 A

O.D. 126.90, **I.D.** 89.30, **H.** 25.30,
No. of leads 3

AS AS4004

ORIGINAL	CARGO	
83601541	**131648**	12 V 55 A

O.D. 125.50, **I.D.** 89.10, **H.** 23.50,
No. of leads 3

AS AS4005

	CARGO	
	239737	12 V 90 A

O.D. 118.00, **I.D.** 92.00, **H.** 29.50,
No. of leads 3

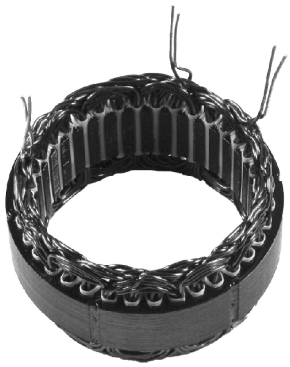

AS AS4006

ORIGINAL	CARGO	
83622971	**231491, 234850**	12 V 120 A

O.D. 130.00, **I.D.** 100.00, **H.** 33.00
No. of leads 3

AS AS4007

for CA1890IR 12 V 130 A

O.D. 130.00, **I.D.** 98.50, **H.** 33.00,
No. of leads 3

AS AS4008

	CARGO	
	235195	12 V 105 A

O.D. 118.00, **I.D.** 92.00, **H.** 29.50,
No. of leads 3

ALTERNATOR STATORS
MITSUBISHI

AS AS5001

ORIGINAL **CARGO** 12 V
A383T24970 **132934** 50/70 A

O.D. 124.80, **I.D.** 99.70, **H.** 20.10,
No. of leads 3

AS AS5002

ORIGINAL **CARGO** 12 V
A383T40170 **138623** 50/65 A

O.D. 126.00, **I.D.** 100.00, **H.** 20.00,
No. of leads 3

AS AS5003

ORIGINAL **CARGO** 12 V
A383X53770 **230951** 100 A

O.D. 136.00, **I.D.** 106.00, **H.** 20.00,
No. of leads 4

AS AS5004

ORIGINAL **CARGO** 12 V
A383T38170 **135952** 95 A

O.D. 129.00, **I.D.** 100.00, **H.** 20.20,
No. of leads 4

ALTERNATOR STATORS
NIPPONDENSO/OTHER

AS AS6001

ORIGINAL **CARGO** 12 V
021100-3200 **133671** 70/80 A

O.D. 118.00, **I.D.** 92.00, **H.** 28.20,
No. of leads 4

AS AS6002

ORIGINAL **CARGO** 12 V
021100-2950 **132861** 55/60/65 A

O.D. 118.00, **I.D.** 90.00, **H.** 25.80,
No. of leads 4

AS AS6003

ORIGINAL **CARGO** 12 V
021100-3400 **135138** 70/75/80 A

O.D. 118.00, **I.D.** 90.00, **H.** 26.30,
No. of leads 4

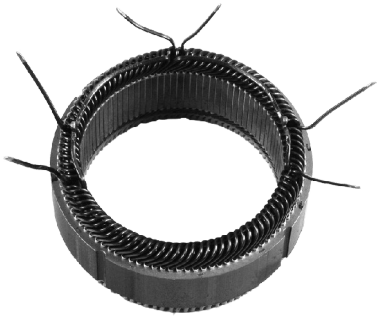

AS AS6004

for CA1834IR 12 V
150 A

O.D. 128.00, **I.D.** 98.00, **H.** 32.00,
No. of leads 6

AS AS6005

for JA1796IR 12 V
80 A

AS AS9001

CARGO 12 V
234815 **for CA1638IR** 90 A

O.D. 128.40, **I.D.** 98.30, **H.** 32.50,
No. of leads 4

AS AS9002

ORIGINAL **CARGO** 12 V
0138751 **234595** 120 A

O.D. 124.00, **I.D.** 93.00, **H.** 36.00,
No. of leads 6

PART 2

STARTERS AND PARTS

AS SBH1003R

SBH - STARTER BRUSH HOLDER
1003 - *DELCO* STARTER BRUSH HOLDER
R - REMANUFACTURED

S - STARTERS
SA - STARTER ARMATURES
SBR - STARTER BRACKET
SBH - STARTER BRUSH HOLDERS
SB - STARTER BRUSH SETS
SD - STARTER DRIVES
SDK - DUST COVER KIT
SF - STARTER FIELD COILS
SG - STARTER GEARS
SS - STARTER SOLENOIDS
SP - STARTER SOLENOID PARTS
SL - STARTER LEVER
IP - IGNITION PARTS
SBU - STARTER BUSHINGS
SRS - STARTER REPAIR SET
SM/P/CO - OTHER PARTS

R - ONLY REMANUFACTURED AVAILABLE

0xxx *BOSCH* PARTS
1xxx *DELCO* PARTS
2xxx *HITACHI* PARTS
3xxx *VALEO* PARTS
4xxx *MAGNETI MARELLI & LUCAS* PARTS
5xxx *MITSUBISHI* PARTS
6xxx *NIPPONDENSO* PARTS
9xxx OTHER SUPPLIERS

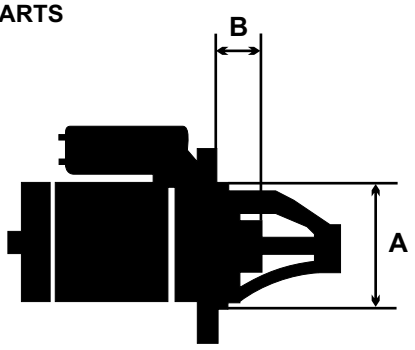

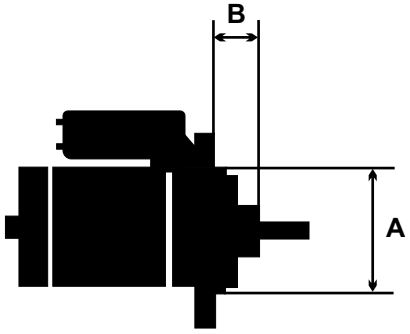

A, B - dimension in millimeters

AS S0001

ORIGINAL	HC PARTS
0001415001	CS191
0001416002	3(0) 5.4 kW 24V
0001416078	A:92 B:48
	9t (CW)

AS S0002

ORIGINAL		HC PARTS
0001368024	0001368307	CS120
0001368055	0001368309	3(0) 4.0 kW 24V
0001368062		A:89 B:48
0001368300		9t (CW)

AS S0003

ORIGINAL		HC PARTS
0001417001	0001416078	CS198
0001417037		3(0) 6.0 kW 24V
0001417051		A:92 B:47
		9t (CW)

AS S0004

ORIGINAL	HC PARTS
0001208516	CS326
0001208707	3(3) 0.85 kW 12V
0986012340	A:66 B:-5
	9t (CW)

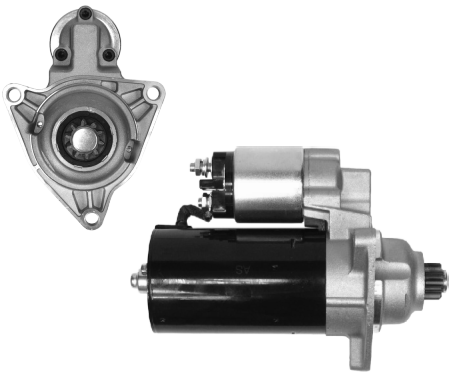

AS S0005

ORIGINAL		HC PARTS
0001124005	0001125011	CS801
0001124006	0001125031	3(0) 1.8 kW 12V
		A:76 B:53
		10, 11t (ACW)

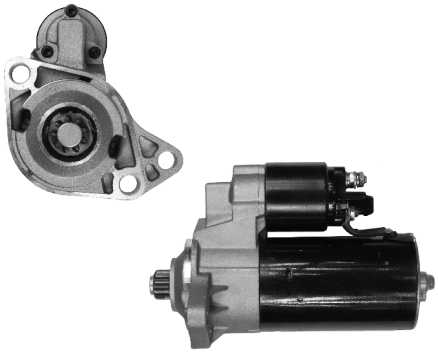

AS S0006

ORIGINAL	HC PARTS
0001124003	CS789
0001125005	2(0) 1.8 kW 12V
	A:76 B:32
	9, 11t (ACW)

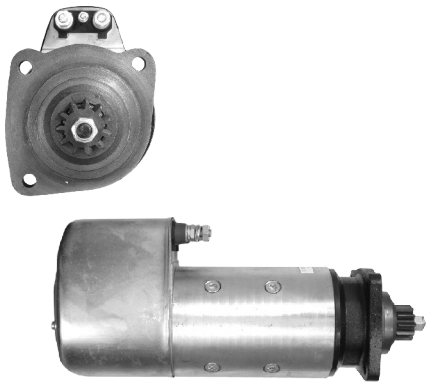

AS S0007

ORIGINAL	HC PARTS
0001410044	CS710
	3(0) 5.4 kW 24V
	A:89 B:48
	11t (CW)

AS S0008

ORIGINAL	HC PARTS
0001411017	CS564
0001411026	3(0) 6.5 kW 24V
0001417006	A:115 B:20
	11t (CW)

AS S0009

ORIGINAL	HC PARTS
0001410050	CS954
0001411010	3(0) 6.6 kW 24V
0001416053	A:89 B:48
0001417023	11t (CW)

STARTERS
BOSCH

AS S0010

ORIGINAL
0001417043

HC PARTS
CS1040
3(0) 6.6 kW 24V
A:92 B:36.5
11t (CW)

AS S0011

ORIGINAL
0001410111

HC PARTS
CS384
3(0) 5.5 kW 24V
A:89 B:48
11t (CW)

AS S0012

ORIGINAL
0001417064

HC PARTS
CS1163
3(0) 6.6 kW 24V
A:115 B:20.5
11t (CW)

AS S0014

ORIGINAL
0001110009
0001110010

HC PARTS
CS358
2(0) 1.7 kW 12V
A:82.5 B:43
9t (ACW)

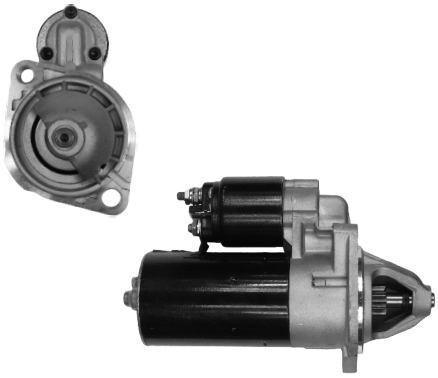

AS S0015

ORIGINAL
0001108001
0001108016
0001108027

HC PARTS
CS282
2(1) 1.1 kW 12V
A:82.4 B:21.5
9t (CW)

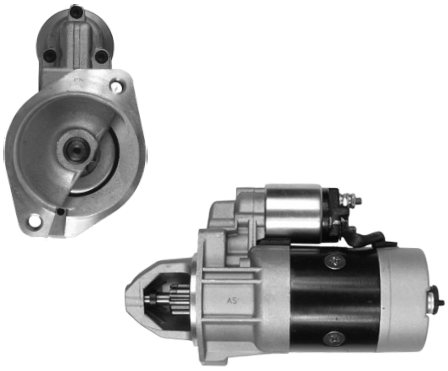

AS S0016

ORIGINAL
0001218006
0001218021
0001218108

HC PARTS
CS331
2(2) 2.2 kW 12V
A:82.5 B:26
10,11t (CW)

AS S0017

ORIGINAL
0001218157
0001223001

HC PARTS
CS885
3(3) 2.2 kW 12V
A:74 B:-5
9,10t (CW)

AS S0018

ORIGINAL
0001218174

HC PARTS
CS1118
3(1) 2.2 kW 12V
A:110 B:27
9t (CW)

AS S0019

ORIGINAL
0001372001

HC PARTS
CS1077
3(0) 6.2 kW 24V
A:92 B:48
11t (CW)

AS S0020

ORIGINAL
0001109034
0001110132

HC PARTS
JS1135
2(2) 2.0 kW 12V
A:74 B:4
9,10t (CW)

AS S0021

ORIGINAL
0001417065

HC PARTS
CS962
3(0) 6.6 kW 24V
A:92 B:47
12t (CW)

AS S0022

ORIGINAL
0001417053
0001417061
0001417068

HC PARTS
CS688
3(0) 6.6 kW 24V
A:89 B:40
12t (CW)

AS S0023

ORIGINAL
0001416062
0001416067

HC PARTS
CS617
3(0) 5.4 kW 24V
A:110 B:47
11t (CW)

AS S0024

ORIGINAL
0001371006

HC PARTS
CS1061
3(0) 6.7 kW 24V
A:92 B:45
11t (CW)

AS S0025

ORIGINAL
0001124001
0001125007

HC PARTS
CS974
2(0) 1.8 kW 12V
A:76 B:52.6
10,11t (ACW)

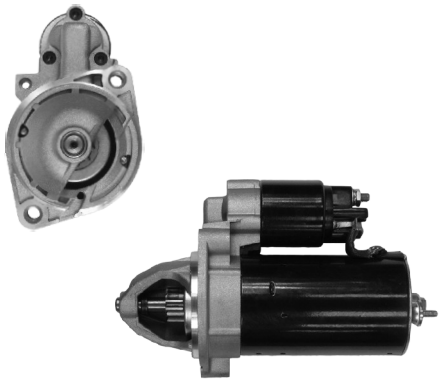

AS S0026

ORIGINAL
0001109014 D7R28
0001109036 D7R281

HC PARTS
CS1044
2(2) 2.0 kW 12V
A:82.5 B:26
10,11t (CW)

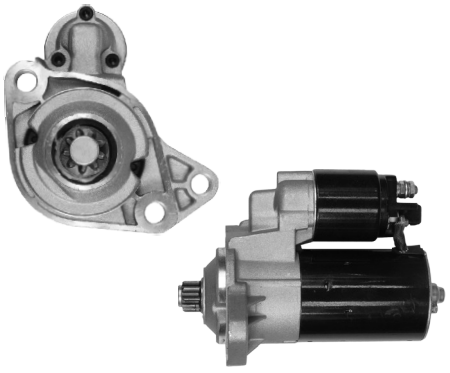

AS S0027

ORIGINAL
0001121006
0001121007

HC PARTS
CS1062
2(0) 1.1 kW 12V
A:76 B:32
9t (ACW)

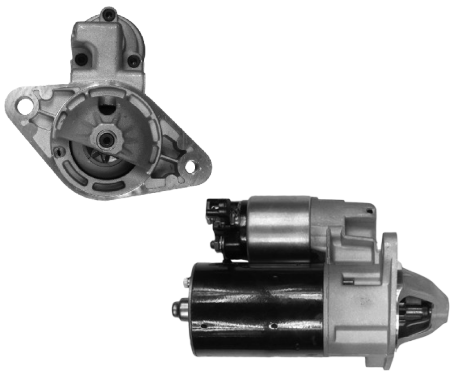

AS S0028

ORIGINAL
0001107031
0001107049

HC PARTS
CS990
2(1) 1.1 kW 12V
A:74 B:9
8t (CW)

STARTERS
BOSCH

AS S0029

ORIGINAL	HC PARTS
0001110016	CS360
0001110075	2(2) 1.7 kW 12V
0001110091	A:82.5 B:27
	10t (CW)

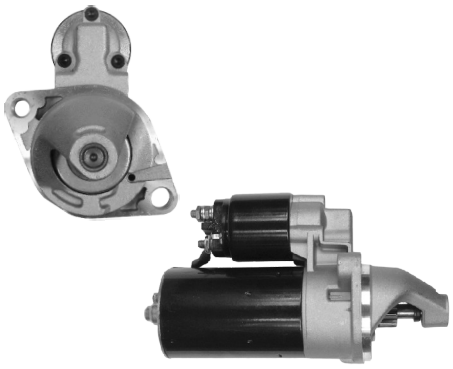

AS S0030

ORIGINAL	HC PARTS
0001108113	CS725
0001108114	2(1) 1.4 kW 12V
	A:76 B:27.5
	9t (CW)

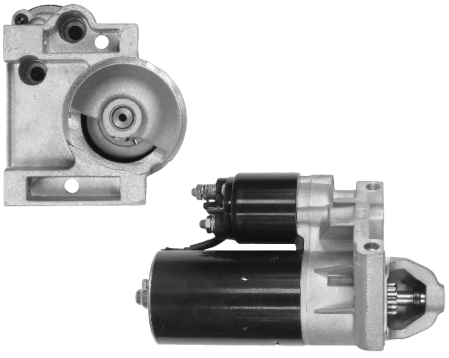

AS S0031

ORIGINAL	HC PARTS
0001108031	CS1036
0001108052	2(0) 1.4 kW 12V
0001108056	A:66 B:11
	9t (CW)

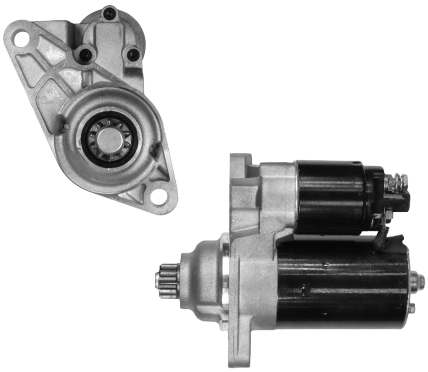

AS S0032

ORIGINAL	HC PARTS
0001121016	CS1197
0001121017	2(0) 1.1 kW 12V
	A:76 B:56
	10t (ACW)

AS S0033

ORIGINAL	HC PARTS
0001107022	CS619
0001107023	2(0) 1.1 kW 12V
	A:76 B:53
	10t (ACW)

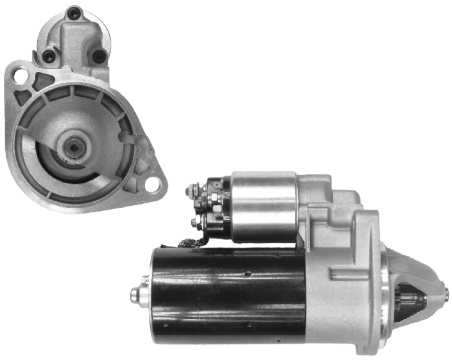

AS S0034

ORIGINAL	HC PARTS
0001108047	CS372
0001108078	2(1) 1.4 kW 12V
0001108151	A:82.5 B:20
	9t (CW)

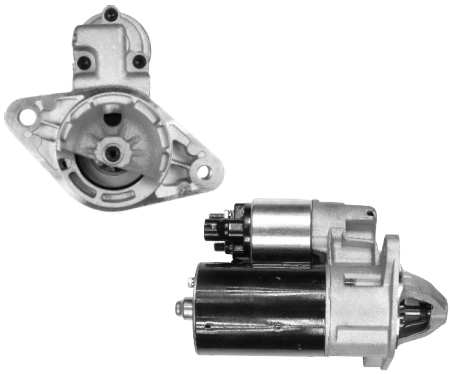

AS S0035

ORIGINAL	HC PARTS
6004AA0018	CS1189
9007045018	2(1) 1.1 kW 12V
	A:74 B:10
	8t (CW)

AS S0036

ORIGINAL	HC PARTS
0001109015	CS976
0001109052	2(1) 2.0 kW 12V
0001109055	A:82.3 B:19
	10t (CW)

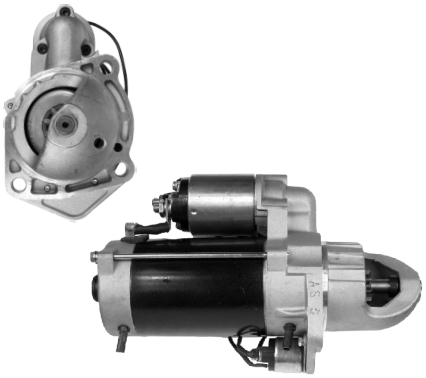

AS S0037

ORIGINAL	HC PARTS
0001231002	CS1112
0001231033	3(0) 4.0 kW 24V
	A:89 B:48
	9t (CW)

AS S0038

ORIGINAL	HC PARTS
0001110007	CS606
0001110008	3(1) 1.7 kW 12V
	A:82.5 B:16
	9t (CW)

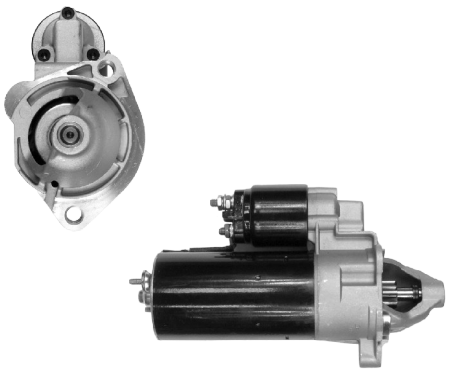

AS S0039

ORIGINAL	HC PARTS
0001110066	CS624
0001110067	2(2) 1.8 kW 12V
0001110108	A:82.5 B:15
	9,10t (CW)

AS S0040

ORIGINAL	HC PARTS
0001368056	CS595
0001368305	3(0) 4.0 kW 24V
0001368310	A:89 B:28
	11t (CW)

AS S0041

ORIGINAL	HC PARTS
0001368016	CS269
0001368081	3(0) 4.0 kW 24V
	A:89 B:27.5
	10t (CW)

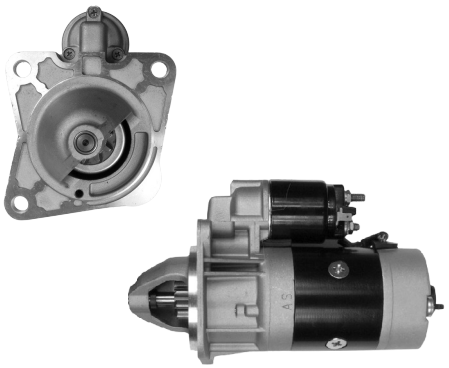

AS S0042

ORIGINAL	HC PARTS
0001218152	CS1201
0001218168	3(0) 2.2 kW 12V
	A:92 B:20
	9t (CW)

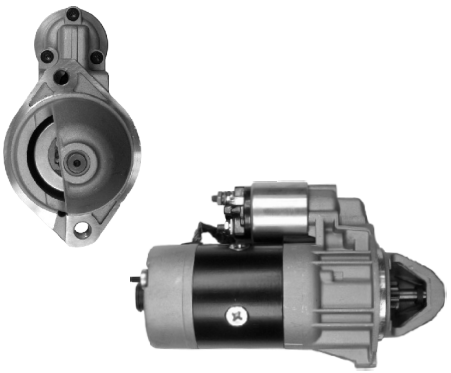

AS S0043

ORIGINAL	HC PARTS
0001218004	CS386
0001218017	2(2) 2.2 kW 12V
0001218111	A:82.5 B:21
w/or w/o bendixhousing	9t (CW)

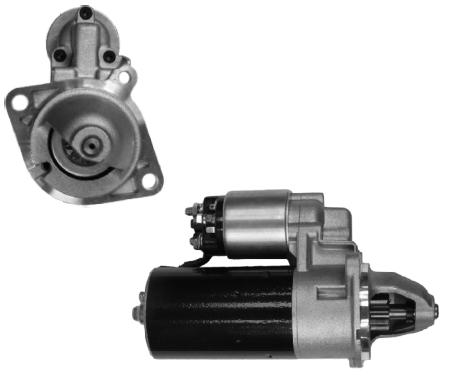

AS S0044

ORIGINAL	HC PARTS
0001108054	CS516
0001108065	3(0) 1.4 kW 12V
0001108115	A:76 B:21
	9t (CW)

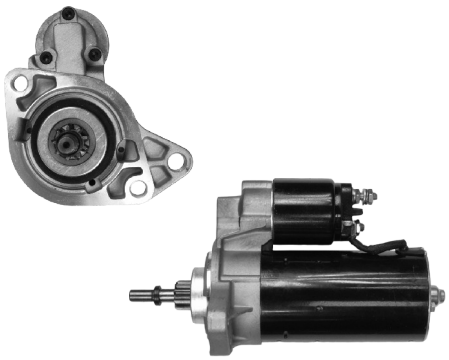

AS S0045

ORIGINAL	HC PARTS
0001110001	CS295
0001110002	2(0) 1.7 kW 12V
0001110134	A:76 B:33.5
	9t (ACW)

AS S0046

ORIGINAL	HC PARTS
0001211012	CS62
0001211013	2(0) 0.7 kW 12V
0001211014	A:76.2 B:30
	t9 (ACW)

STARTERS
BOSCH

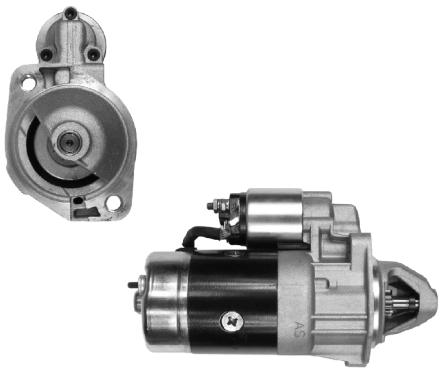

AS S0047

ORIGINAL	HC PARTS
0001218012	CS350
0001218013	2(2) 2.2 kW 12V
0001218113	A:82.5 B:21
	t9 (CW)

AS S0048

ORIGINAL	HC PARTS
0001121008	CS1119
0001121009	2(0) 1.1 kW 12V
0001121018	A:76 B:53
	t10 (ACW)

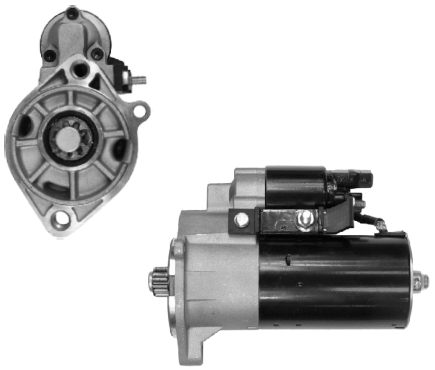

AS S0049

ORIGINAL	HC PARTS
0001125501	CS1165
0001125502	2(2) 2.0 kW 12V
0001125511	A:82.5 B:21
	t9 (CW)

AS S0050

ORIGINAL	HC PARTS
0001208709	CS297
0001208710	3(3) 0.95 kW 12V
0001208711	A:82.5 B:14
	t9 (CW)

AS S0051

ORIGINAL	HC PARTS
0001110039	CS583
0001110053	2(2) 1.7 kW 12V
0001110113	A:78 B:12
	t10 (CW)

AS S0052

ORIGINAL	HC PARTS
0001108018	CS377
0001108064	2(0) 1.4 kW 12V
	A:76 B:21.5
	t9,10 (CW)

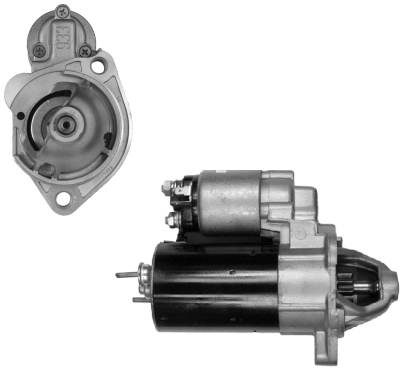

AS S0054

ORIGINAL	HC PARTS
0001107017	CS612
0001107018	2(2) 1.1 kW 12V
0001107054	A:82.5 B:15
	t9 (CW)

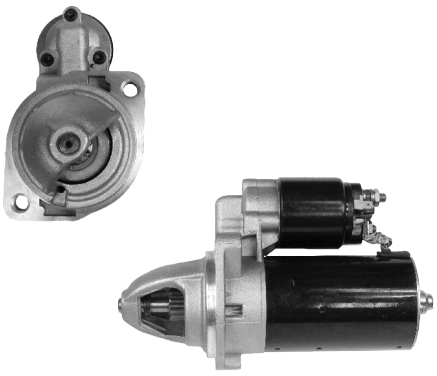

AS S0055

ORIGINAL	HC PARTS
0001108030	CS389
0001108088	2(2) 1.4 kW 12V
	A:82.5 B:36
	t9 (CW)

AS S0056

ORIGINAL	HC PARTS
0001108092	CS878
	2(0) 1.4 kW 12V
	A:89 B:18.5
	t9 (CW)

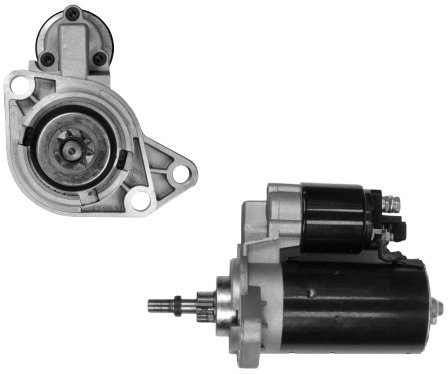

AS S0057

ORIGINAL	HC PARTS
0001108005	CS615
0001108006	2(0) 1.4 kW 12V
0001108094	A:76 B:33
	t9 (ACW)

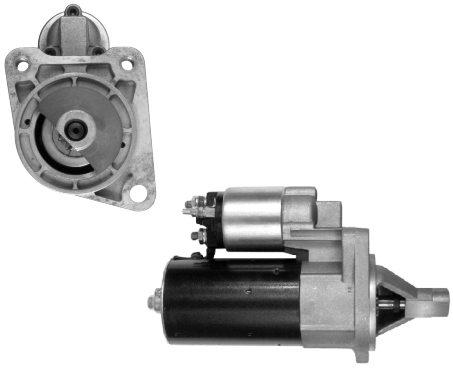

AS S0058

ORIGINAL	HC PARTS
0001108032	CS979
0001108046	3(2) 1.4 kW 12V
0001108068	A:82 B:8
	t9 (CW)

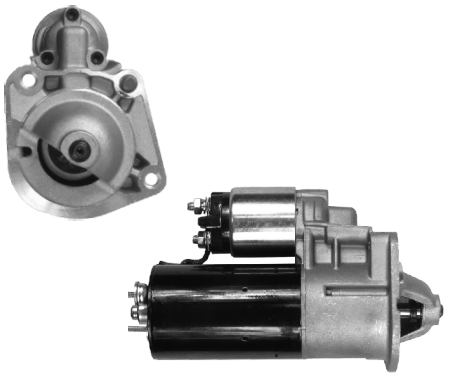

AS S0059

ORIGINAL	HC PARTS
0001108107	CS680
0001108153	3(2) 1.4 kW 12V
0001108166	A:76 B:-1
	t9 (CW)

AS S0060

ORIGINAL	
R22.04	
	3(0) 6.6 kW 24V
	t11 (CW)

AS S0061

ORIGINAL	HC PARTS
0001411013	CS1284
0001517047	3(0) 6.6 kW 24V
	A:92 B:48
	t11 (CW)

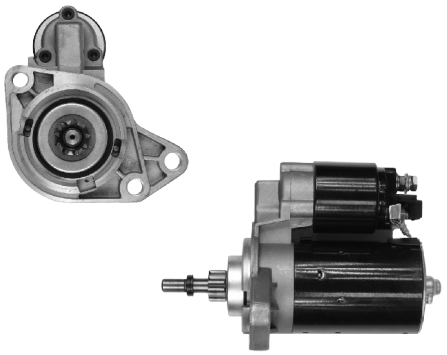

AS S0062

ORIGINAL		HC PARTS
0001107020	0986016290	CS618
0001107021		2(0) 1.1 kW 12V
0001112038		A:76 B:33
0001112039		t9 (ACW)

AS S0063

ORIGINAL	HC PARTS
0001416005	CS544
0001417035	3(0) 5.5 kW 24V
0986014910	A:89 B:48
	t11 (CW)

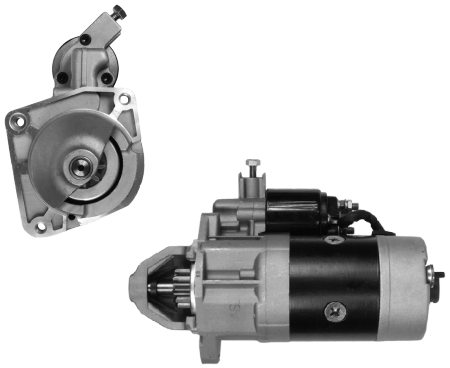

AS S0064

ORIGINAL	HC PARTS
0001218159	CS973
0986017020	3(3) 2.2 kW 12V
	A:81 B:22
	t9 (CW)

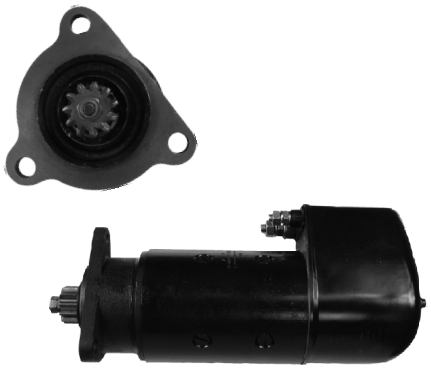

AS S0065

ORIGINAL	HC PARTS
0001417042	CS881
0986013450	3(0) 6.6 kW 24V
	A:92 B:36
	t11 (CW)

STARTERS
BOSCH

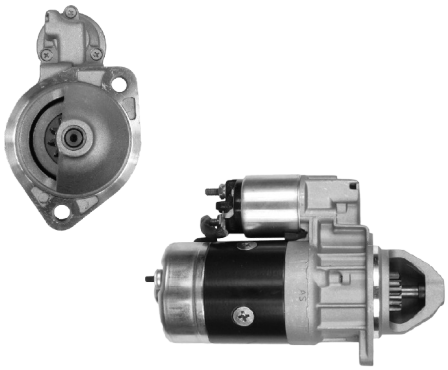

AS S0066

ORIGINAL	HC PARTS
0001218172	CS1185
0001223002	2(0) 2.2 kW 12V
0986017430	A:82.5 B:24
0986018290	t11 (CW)

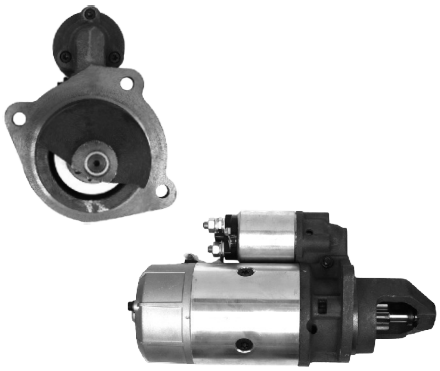

AS S0067

ORIGINAL		HC PARTS
0001359084	0001367300	CS186
0001367034	0001367301	3(0) 3.0 kW 12V
0001367045	0001367303	A:89 B:48
0001367059	0986013480	t9 (CW)

AS S0068

ORIGINAL		HC PARTS
0001360012	0001368007	CS530
0001360014	0986011270	3(0) 4.0 kW 24V
0001360035		A:89 B:27.5
0001368001		t9 (CW)

AS S0069

ORIGINAL	HC PARTS
0001110013	CS341
	3(3) 1.7 kW 12V
	A:76.0 B:15.0
	t10 (CW)

AS S0070

ORIGINAL	HC PARTS
0001231003	CS1279
0986017990	3(0) 4.0 kW 24V
	A:89 B:48.6
	t9 (CW)

AS S0071

ORIGINAL	HC PARTS
0001372005	CS1333
	3(0) 6.2 kW 24V
	A:92.0 B:48.5
	t11 (CW)

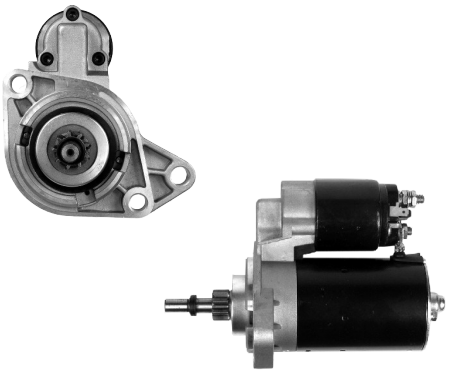

AS S0072

ORIGINAL		HC PARTS
0001106001	0001112003	CS294
0001106002	0001112004	2(0) 0.9 kW 12V
0001107007	0001112039	A:76 B:32.5
0001107008	0001114005	t9 (ACW)

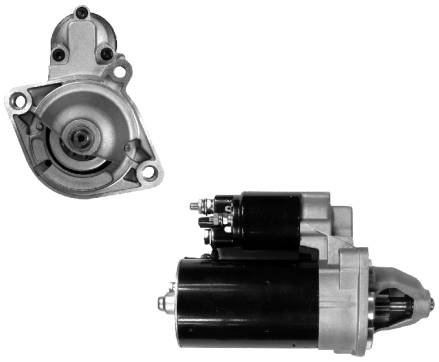

AS S0073

ORIGINAL	HC PARTS
0001108157	CS1067
0986014900	3(2) 1.4 kW 12V
0986017110	A:76.1 B:21.6
	t9 (CW)

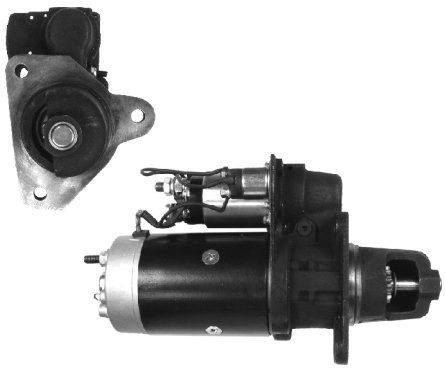

AS S0074

ORIGINAL	HC PARTS
0001372006	CS1269
0986018370	3(0) 6.2 kW 24V
	A:92 B:49
	t11,12 (CW)

AS S0075

ORIGINAL
0001360050

HC PARTS
CS608
3(0) 4 kW 24V
A:88.5 B:22
t10 (CW)

AS S0076

ORIGINAL
0001372002

HC PARTS
CS1274
3(0) 6.2 kW 24V
A:110 B:48
t11 (CW)

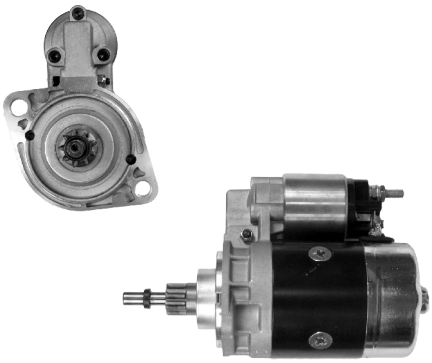

AS S0077

ORIGINAL
0001208425

HC PARTS
CS683, CS298
2(0) 0.95 kW 12V
A:76 B:44
t9 (ACW)

AS S0078

ORIGINAL
0001231007

HC PARTS
CS1243
3(0) 4 kW 24V
A:89 B:27
t11 (CW)

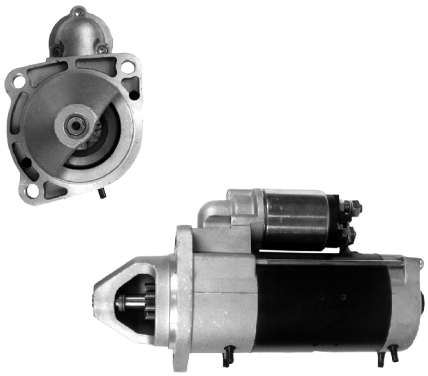

AS S0079

ORIGINAL
0001231005

CARGO
112494
3(0) 4.0 kW 24V
A:89 B:28
t9 (CW)

AS S0080

ORIGINAL
0001231011

HC PARTS
CS1248
3(0) 4 kW 24V
A:110 B:27.5
t9 (CW)

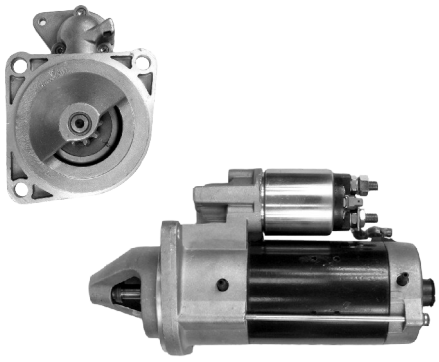

AS S0081

ORIGINAL
0001230007

CARGO
113182
3(0) 3 kW 12V
A:110 B:20
t9 (CW)

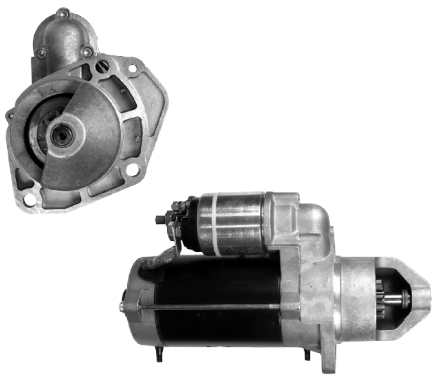

AS S0082

ORIGINAL
0001231016

HC PARTS
CS1268
3(0) 4 kW 24V
A:89 B:48
t10 (CW)

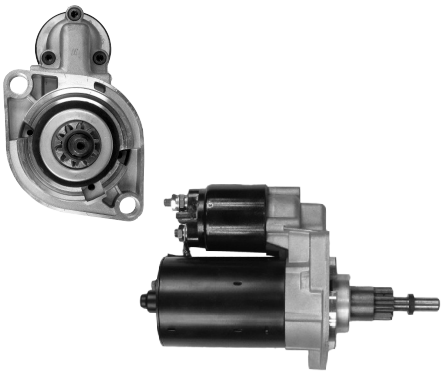

AS S0083

ORIGINAL
0001107003

HC PARTS
CS601
2(0) 1.1 kW 12V
A:76 B:50
t10 (ACW)

STARTERS
BOSCH

AS S0084

ORIGINAL
0001110017

HC PARTS
CS373
3(3) 1.7 kW 12V
A:70 B:-6
t10,11 (CW)

w/or w/o bendixhousing

AS S0085

ORIGINAL
0001231008

HC PARTS
CS1267
3(0) 4 kW 24V
A:89 B:29
t10 (CW)

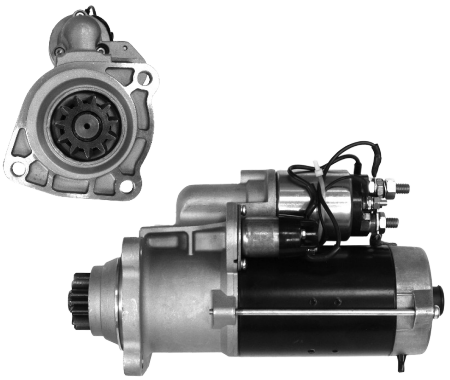

AS S0086

ORIGINAL
0001241008

5.5 kW 24V

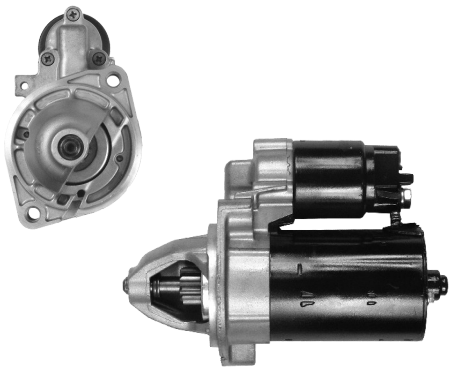

AS S0087

ORIGINAL
0001107037

HC PARTS
CS1075
2(2) 1.2 kW 12V
A:82.5 B:26
t9 (CW)

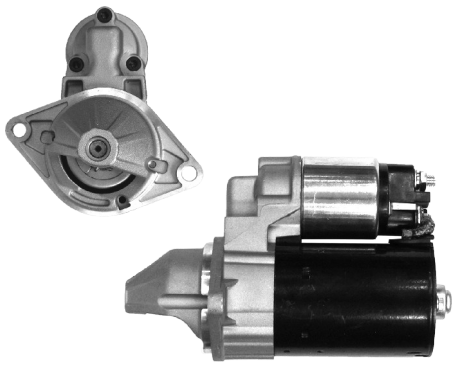

AS S0088

ORIGINAL
0001107401

HC PARTS
CS1257
2(0) 1.1 kW 12V
A:68 B:19
t9 (CW)

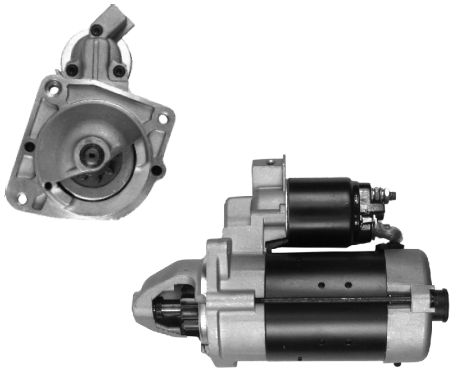

AS S0089

ORIGINAL
0001223013

HC PARTS
CS1198
3(3) 2.3 kW 12V
A:81.5 B:23
t9 (CW)

AS S0090

ORIGINAL
0001123012

HC PARTS
CS1293
3(0) 2 kW 12V
A:76.5 B:52.5
t10,11 (ACW)

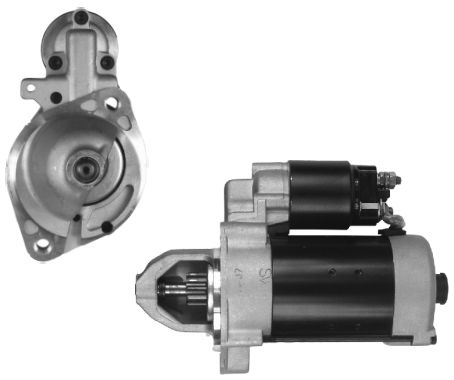

AS S0091

ORIGINAL
0986018270

HC PARTS
CS1202
2(2) 2.3 kW 12V
A:82.5 B:26
t10 (CW)

AS S0092

ORIGINAL
0001368020

HC PARTS
CS394
3(0) 4 kW 24V
A:110 B:26
t9 (CW)

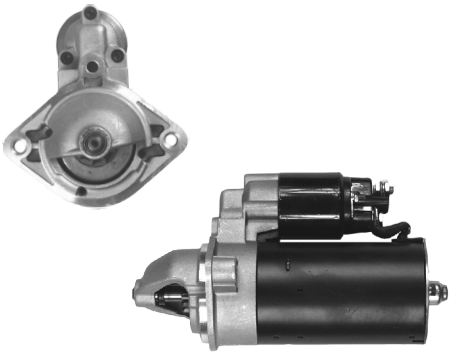

AS S0093

ORIGINAL
0001109025

HC PARTS
CS984
2(2) 2 kW 12V
A:76 B:21
t9 (CW)

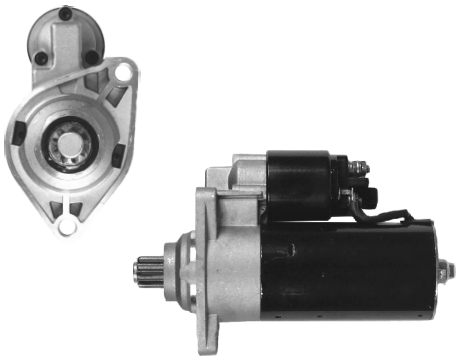

AS S0094

ORIGINAL
0001124012

HC PARTS
CS988
2(0) 1.8 kW 12V
A:66 B:46
t9 (ACW)

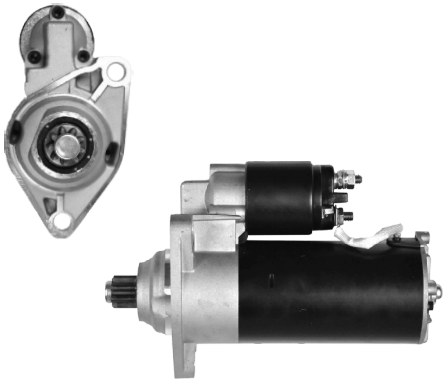

AS S0095

ORIGINAL
0001124018

HC PARTS
CS1194
2(0) 1.8 kW 12V
A:66 B:46
t9 (ACW)

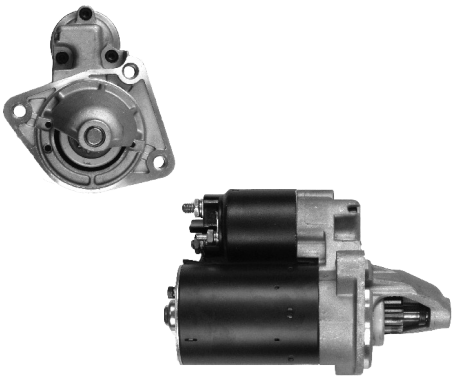

AS S0096

ORIGINAL
0986017060

HC PARTS
CS1050
3(3) 1.1 kW 12V
A:76 B:27
t10 (CW)

AS S0097

ORIGINAL
0001371004

HC PARTS
CS1169
3(0) 6.7 kW 24V
A:92 B:48
t11 (CW)

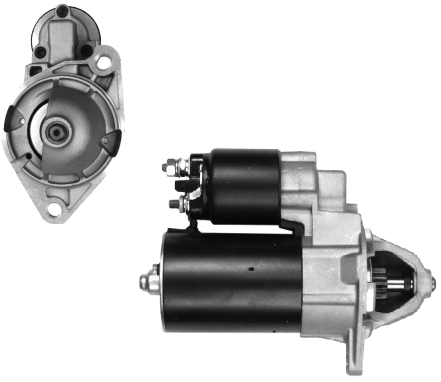

AS S0098

ORIGINAL
0001107045

HC PARTS
CS879
2(1) 1.1 kW 12V
A:82.5 B:19
t9 (CW)

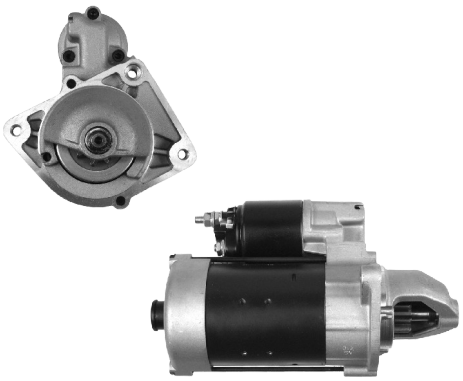

AS S0099

ORIGINAL
0001223003

HC PARTS
CS1203
3(3) 2.3 kW 12V
A:81 B:27
t9 (CW)

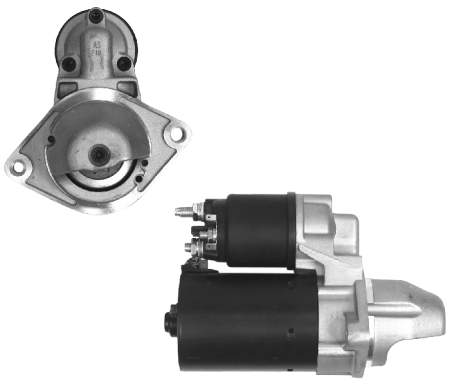

AS S0100

ORIGINAL
0001107437

HC PARTS
CS1334
2(1) 1.1 kW 12V
A:64 B:24
t9 (CW)

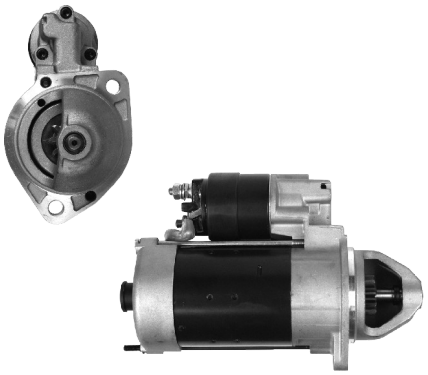

AS S0101

ORIGINAL
0001223016

CARGO
113181
2(0) 2.4 kW 12V
A:82.5 B:24
t9 (CW)

STARTERS
BOSCH

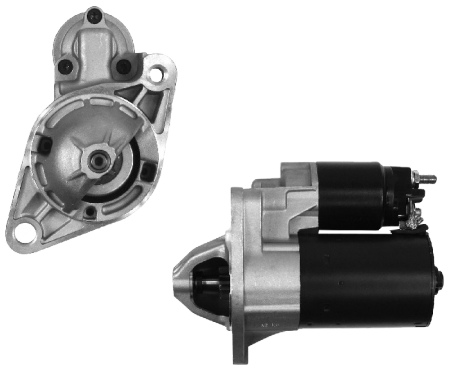

AS S0102

ORIGINAL
0001107415

CARGO
113613
2(1) 1.1 kW 12V
A:74 B:10
t8 (CW)

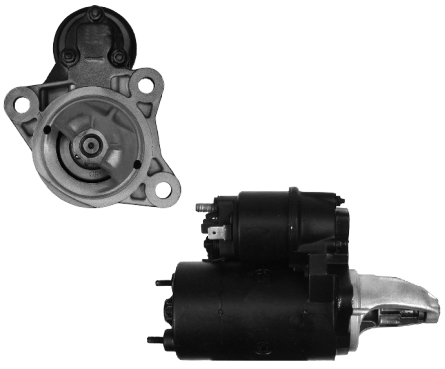

AS S0103

ORIGINAL
0001106016

HC PARTS
CS610
3(0) 0.8 kW 12V
A:67 B:41
t9 (ACW)

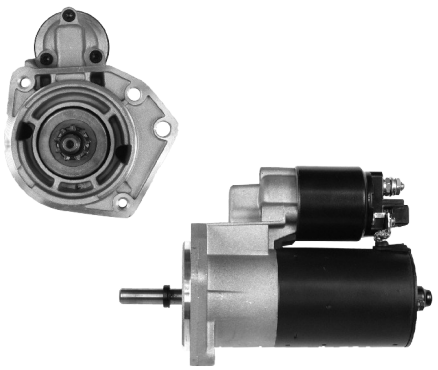

AS S0104

ORIGINAL
0001107025

HC PARTS
CS880
4(2) 1.1 kW 12V
A:82 B:2
t9(CW)

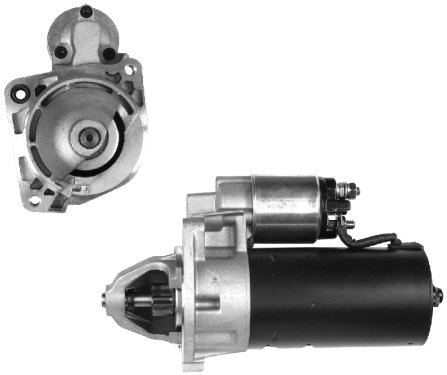

AS S0105

ORIGINAL
0001109018
0001110092
0001110102
0001110124

HC PARTS
CS1037
3(3) 1.7 kW 12V
A:82 B:23.5
t9, 10, 11 (CW)

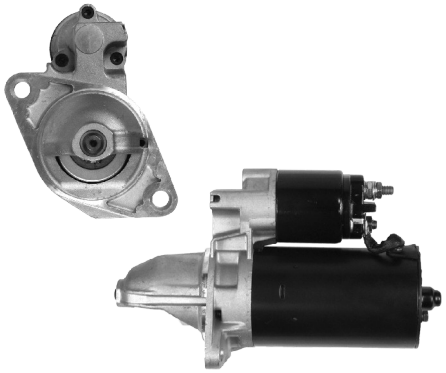

AS S0106

ORIGINAL
0001109040

HC PARTS
CS1049
2(0) 1.7 kW 12V
A:74 B:40
t9 (CW)

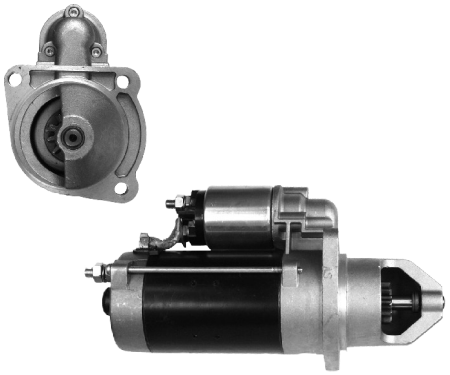

AS S0107

ORIGINAL
0001231014

HC PARTS
CS391
3(0) 4 kW 24V
A:89 B:47
t9, 11 (CW)

w/or w/o bendixhousing

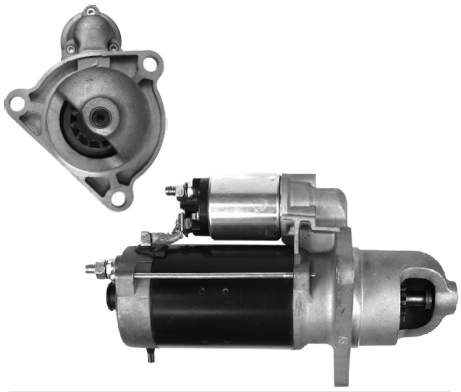

AS S0108

BOSCH
0001231004

HC PARTS
CS1285
3(0) 4 kW 24V
A:92 B:47
t12 (CW)

AS S0109

ORIGINAL
0001371008

HC PARTS
CS1199
3(0) 6.7 kW 24V
A:92 B:37
t11 (CW)

AS S0110

ORIGINAL
0001359122

HC PARTS
CS682
3(0) 3 kW 12V
A:110 B:27.5
t9 (CW)

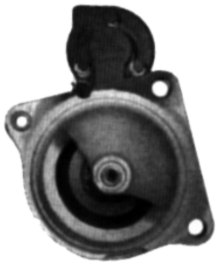

AS S0111

ORIGINAL
0001362102

HC PARTS
CS689
3(0) 2.5 kW 12V
A:110 B:27
t9 (CW)

AS S0112

ORIGINAL
0001358041
0001362312

HC PARTS
CS706
2(0) 2.7 kW 12V
A:82.5 B:35
t10 (CW)

AS S0113

ORIGINAL
0001230012

HC PARTS
CS718
2(0) 3 kW 12V
A:82.5 B:23
t9 (CW)

AS S0114

ORIGINAL
0001358020

HC PARTS
CS335
2(0) 3 kW 12V
A:82.5 B:20.5
t11 (CW)

AS S0115

ORIGINAL
0001358046

HC PARTS
CS103, CS114
3(0) 2.7 kW 12V
A:89 B:27
t9 (CW)

AS S0116

ORIGINAL
0001359021

HC PARTS
CS240
3(0) 3 kW 12V
A:110 B:26
t9, 10 (CW)

AS S0117

ORIGINAL
0001359016

HC PARTS
CS395
2(0) 3 kW 12V
A:82.5 B:34
t10 (CW)

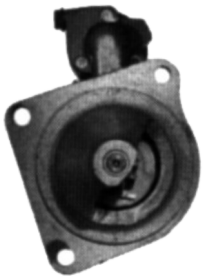

AS S0118

ORIGINAL
0001360015

HC PARTS
CS232
3(0) 4 kW 24V
A:110 B:27
t9, 10 (CW)

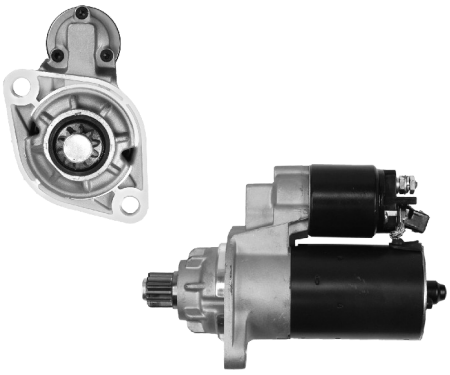

AS S0119

ORIGINAL
0001121022

HC PARTS
CS1337
2(0) 1.1kW 12V
A:76 B:62
t10 (ACW)

STARTERS
BOSCH

AS S0120

ORIGINAL
0001122402

HC PARTS
CS1347
2(0) 1.1 kW 12V
A:76 B:62
t10 (ACW)

AS S0121

ORIGINAL
0001107438

HC PARTS
CS1407
2(1) 1.1 kW 12V
A:74 B:28
t8, 9 (CW)

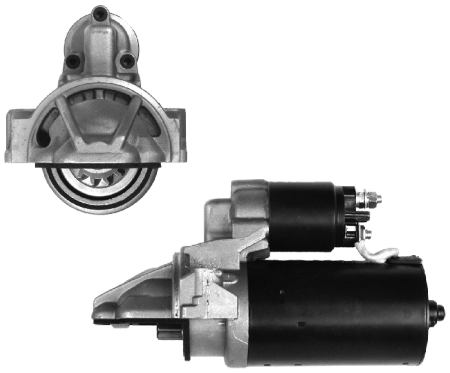

AS S0123

ORIGINAL
0001109205

HC PARTS
CS1421
2.0 kW 12V
A: B:
t12 (CW)

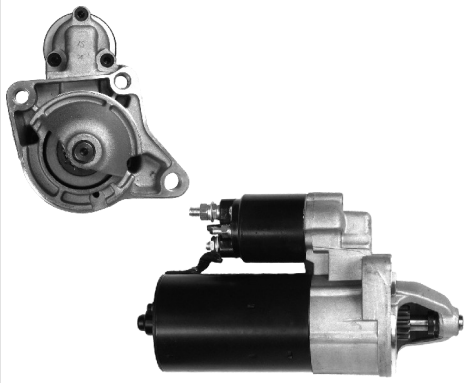

AS S0124

ORIGINAL
0001108121

HC PARTS
CS719
3(2) 1.4 kW 12V
A:76 B:14
t10 (CW)

AS S0125

ORIGINAL
0001124013

HC PARTS
CS1047
2(0) 1.8 kW 12V
A:76 B:27
t9 (ACW)

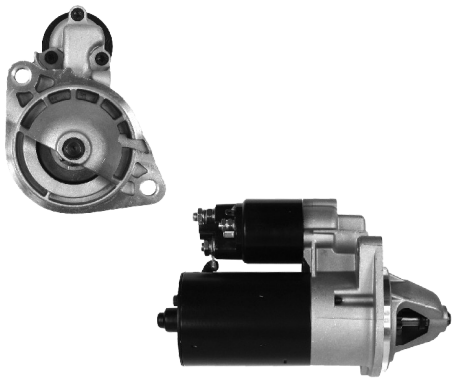

AS S0126

ORIGINAL
0001107015

HC PARTS
CS727
2(1) 1.1 kW 12V
A:82 B:20
t9 (CW)

AS S0127

ORIGINAL
0001218019

HC PARTS
CS370
3(0) 2.2 kW 12V
A:110 B:26.5
t9 (CW)

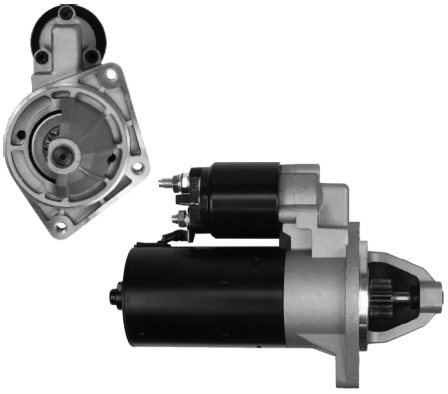

AS S0128

ORIGINAL
0001208218

HC PARTS
CS139
3(3) 1.3kW 12V
A:82.5 B:22
t11 (CW)

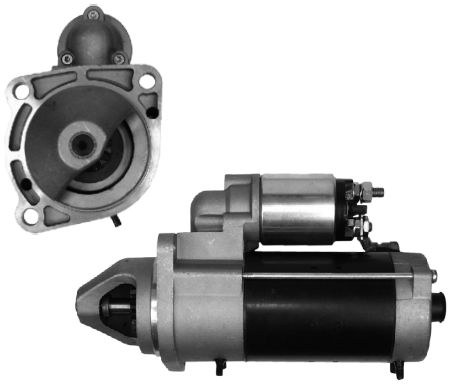

AS S0129

ORIGINAL	HC PARTS
0001230006	CS1130
0001230014	3(0) 3 kW 12V
0986019020	A:89 B:28
	t9 (CW)

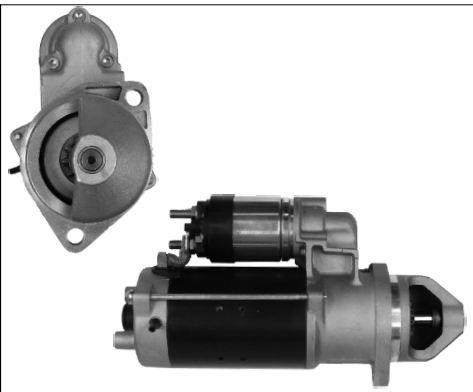

AS S0130

ORIGINAL	DELCO
0001231006	DRS7270
B001816486	4 kW 24V
0986017270	A:82.5 B:26
	t11 (CW)

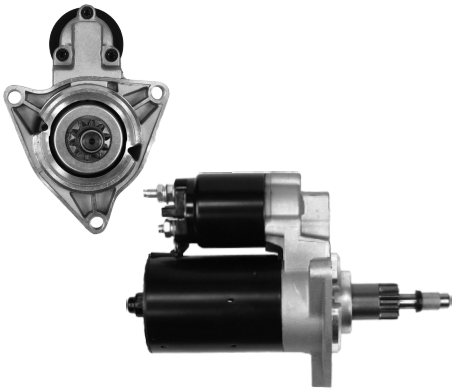

AS S0131

ORIGINAL	HC PARTS
0001107005	CS597
0001107006	3(0) 1.1 kW 12V
0986016750	A:76 B:53
	t10 (ACW)

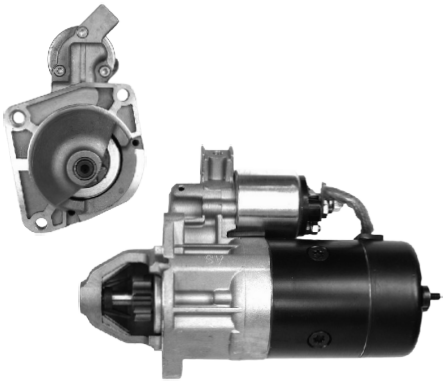

AS S0132

ORIGINAL	HC PARTS
0001218014	CS351
0001218102	3(0) 2.2 kW 12V
0001218154	A:81.5 B:23
0986013640	t9 (CW)

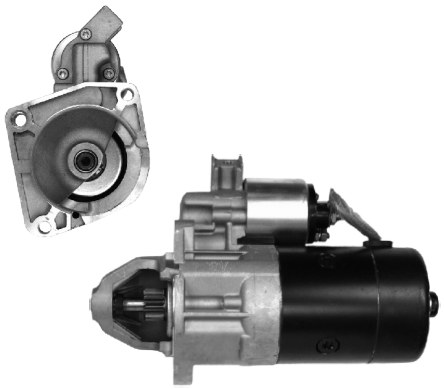

AS S0133

ORIGINAL	HC PARTS
0001218010	CS504
0001218121	3(0) 2.2 kW 12V
0001218155	A:82 B:23.5
0986013630	t9 (CW)

AS S0134

ORIGINAL	HC PARTS
0001410094	CS805
0001415007	3(0) 5.5 kW 24V
0001416004	A:89 B:46
	t13 (CW)

AS S0135

ORIGINAL	HC PARTS
0001417075	CS1161
0986018090	3(0) 6,6 kW 24V
	A:92 B:47
	t12 (CW)

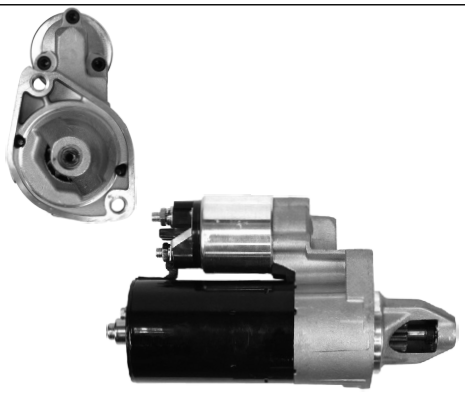

AS S0136

ORIGINAL	HC PARTS
0001108197	CS1249
0001108403	2(2) 1.4 kW 12V
0001108404	A:60 B:26
0986019500	t10 (CW)

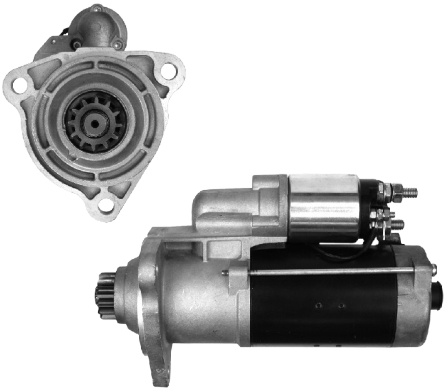

AS S0137

ORIGINAL	HC PARTS
0001241003	CS1380
0001241007	3(0) 5.5 kW 24V
	A:110 B:48
	t12 (CW)

STARTERS
BOSCH

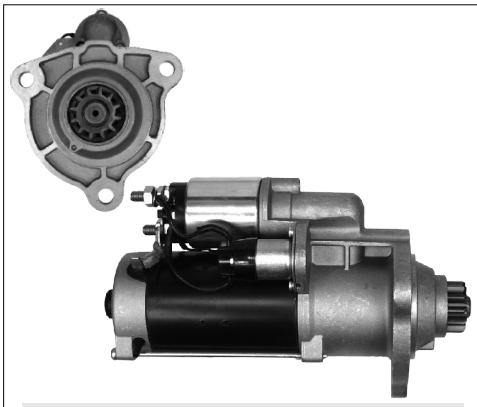

AS S0138

ORIGINAL	HC PARTS
0001241001	CS1399
0986021480	3(0) 5.5 kW 24V
	A:92 B:48
	t12 (CW)

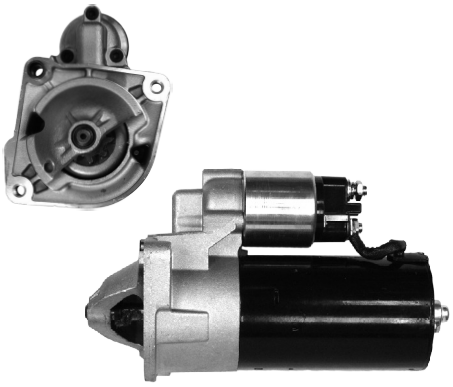

AS S0139

ORIGINAL	HC PARTS
0001109300	CS1389
0001109301	3(3) 2.5 kW 12V
0986021640	A:82 B:1
	t9 (CW)

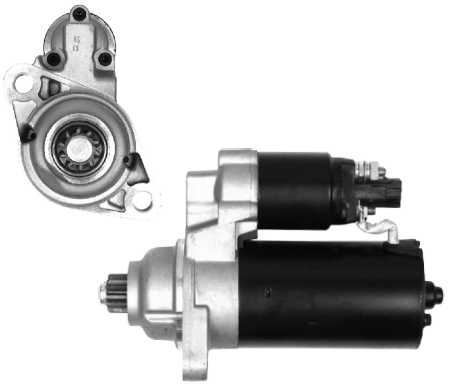

AS S0140

ORIGINAL	HC PARTS
0001123018	CS1393
0001123019	2(0) 1.7 kW 12V
0986020300	A:76 B:52
	t10 (ACW)

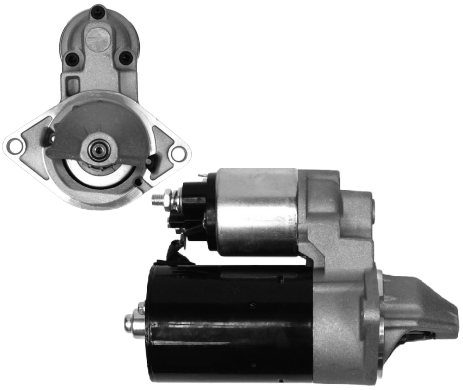

AS S0141

ORIGINAL	HC PARTS
0001107077	CS1188
0001107098	2(0) 1.1 kW 12V
0986018350	A:68 B:19
	t9 (CW)

AS S0142

ORIGINAL	HC PARTS
0001218116	CS599
0001218117	3(0) 2.2 kW 12V
02B911023A	A:76 B:52.5
02B911023AX	t10 (ACW)

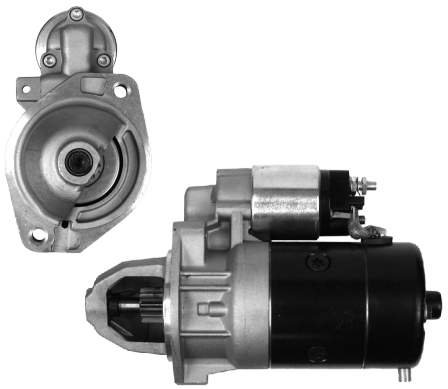

AS S0143

ORIGINAL	HC PARTS
0001218156	CS1162
0001218162	2(2) 2.2 kW 12V
0986016390	A:82.5 B:25
	t10,11 (CW)

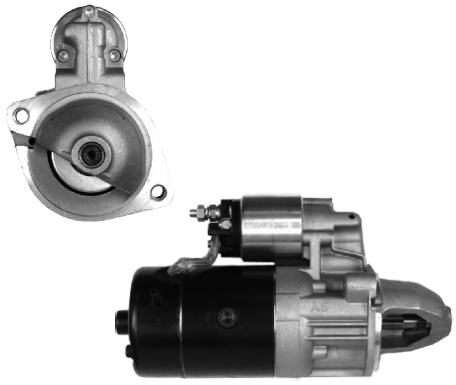

AS S0144

ORIGINAL	HC PARTS
0001218016	CS576
0001218110	2(2) 2.2 kW 12V
	A:82.5 B:26
	t10 (CW)

AS S0145

ORIGINAL	HC PARTS
0001364100	CS501
0001364301	3(0) 4.8 kW 24V
0986012700	A:89 B:27.5
	t9 (CW)

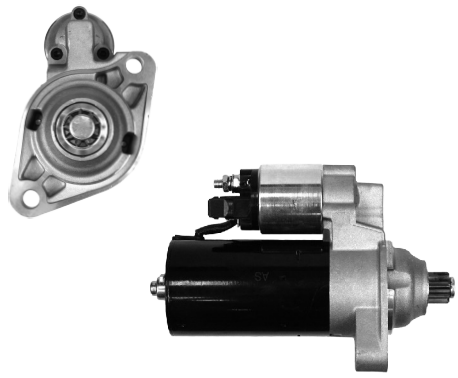

AS S0146

ORIGINAL	HC PARTS
0001125009	CS620, CS1266
0001125010	2(0) 1.8 kW 12V
0001125039	A:76 B:53
0001125040	t9 (ACW)

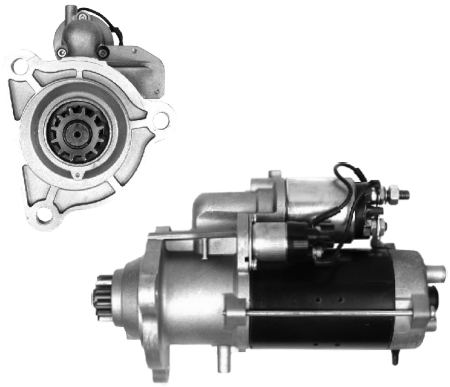

AS S0147

ORIGINAL
0001241005
0001241009
0001241021

3(0) 5.5 kW 24V
A:92 B:51
t12 (CW)

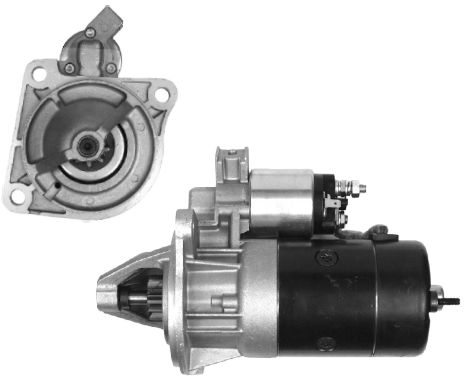

AS S0148

ORIGINAL
0001218024
0001218103
0001218703
0986013660

HC PARTS
CS510
3(0) 2.2 kW 12V
A:110 B:27
t9 (CW)

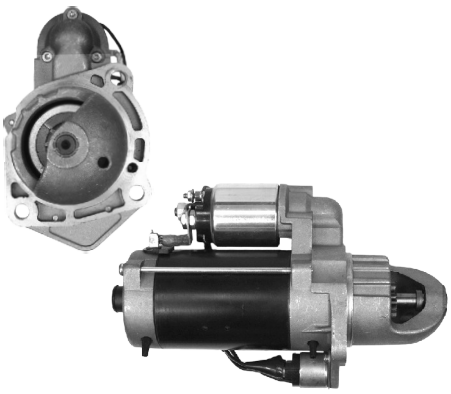

AS S0149

ORIGINAL
0001230001

3(0) 3 kW 12V
A:89 B:51
t9 (CW)

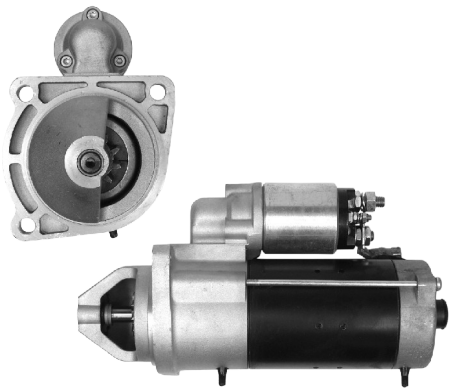

AS S0150

ORIGINAL
0001231009
0001360050
0001368070
0001368304

HC PARTS
CS608
3(0) 4.0 kW 24V
A:88.5 B:22
t10 (CW)

AS S0151

ORIGINAL
0001402055
0001402059
0001402081
0001402083

HC PARTS
CS194
3(0) 4.5 kW 24V
A:89 B:48.5
t9 (CW)

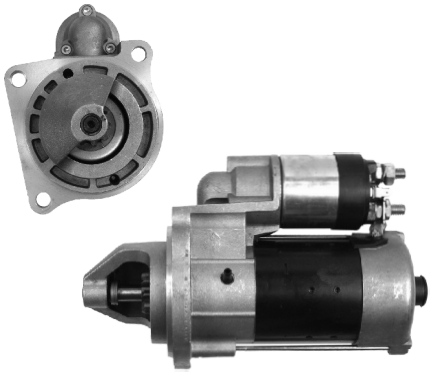

AS S0152

ORIGINAL
0001223504
0001362032
0001362039
0986012670

HC PARTS
CS572
3(0) 2.5 kW 12V
A:110 B:27.5
t9 (CW)

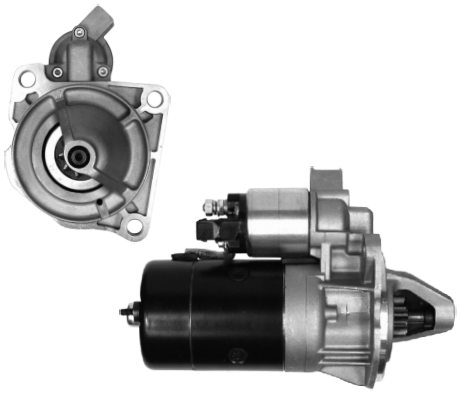

AS S0153

ORIGINAL
0001218822

3(0) 2.3 kW 12V
A:110 B:27
t9 (CW)

AS S0154

ORIGINAL
0001109041
0986018030

HC PARTS
CS1196
2(1) 2.0 kW 12V
A:82.5 B:21
t9 (CW)

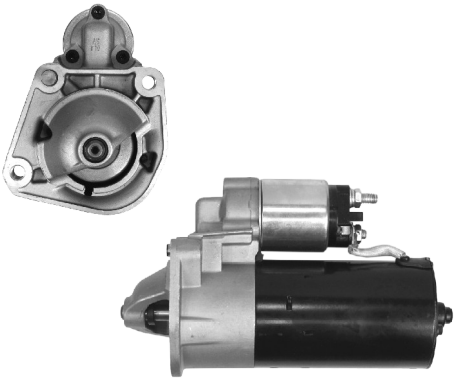

AS S0155

ORIGINAL
0001109252
0986018910

HC PARTS
CS1271
3(2) 2.2 kW 12V
A:76 B:0
t9 (CW)

STARTERS
BOSCH

AS S0156

ORIGINAL
0001109031

2(0) 2 kW 12V
A:82.5 B:19
t9 (CW)

AS S0157

ORIGINAL
0001107059
0001107082
0986017530

HC PARTS
CS986
3(2) 1.1 kW 12V
A:72 B:15
t21 (CW)

AS S0158

ORIGINAL
0001107016

HC PARTS
CS790
3(2) 1.0 kW 12V
A:76 B:13
t10 (CW)

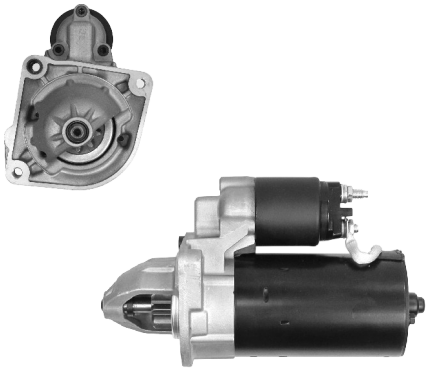

AS S0159

ORIGINAL
0001109302
0001109303

HC PARTS
CS1449
3(3) 2.5 kW 12V
A:82 B:23
t9 (CW)

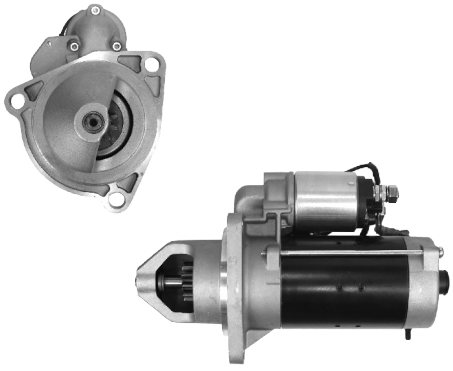

AS S0160

ORIGINAL
0001231013
0001368313
0986017980

HC PARTS
CS1331
3(0) 4.0 kW 24V
A:110 B:48
t11 (CW)

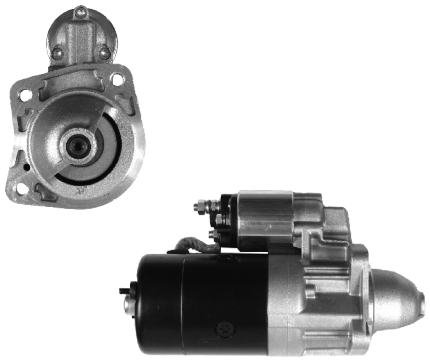

AS S0161

ORIGINAL
0001218105
0001218128
0001218728
0986015090

HC PARTS
CS613
3(3) 2.2 kW 12V
A:76 B:15
t10 (CW)

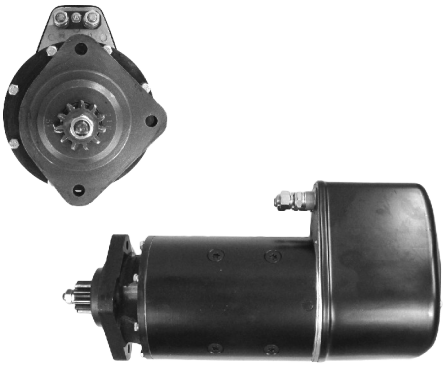

AS S0162

ORIGINAL
0001510017
0986011590

3 9 kW 24V
A:89 B:51
t11 (CW)

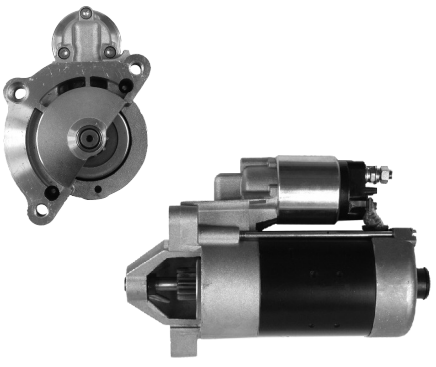

AS S0163

ORIGINAL
0001223014
0986018970

HC PARTS
CS1326
3(3) 2.3 kW 12V
A:72 B:-5.5
t10 (CW)

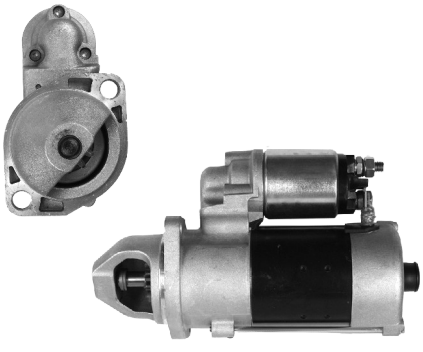

AS S0164

ORIGINAL
0001223506

HC PARTS
CS996
2 2.6 kW 12V
A:82.5 B:24
t11 (CW)

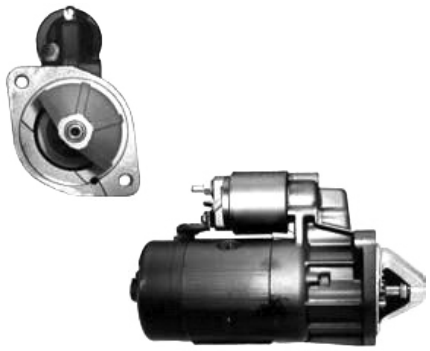

AS S0165

ORIGINAL
0001218818
0986015920

HC PARTS
JS568
2(2) 2.2 kW 12V
A:82.5 B:9
t9 (CW)

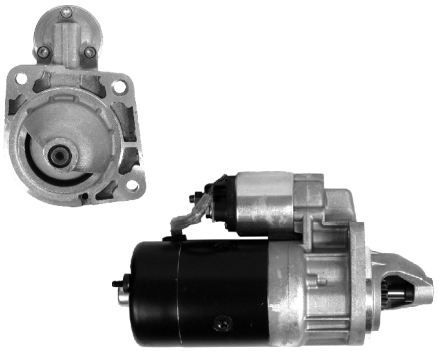

AS S0166

ORIGINAL
0001218175
0001218023
0001218125
0986015610

HC PARTS
CS611
3(0) 2.2 kW 12V
A:82.5 B:21
t11 (CW)

AS S0167

ORIGINAL
0001510025

3 9.0 kW 24V
A:92 B:51
t9 (CW)

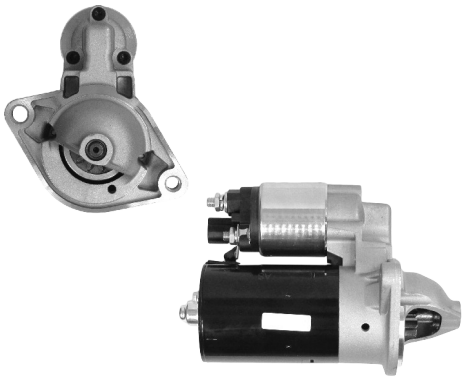

AS S0168

ORIGINAL
0001107088
0001107433
0001107434
0986018480

HC PARTS
JS1236
2(1) 1.1 kW 12V
A:74 B:16
t9, 11 (CW)

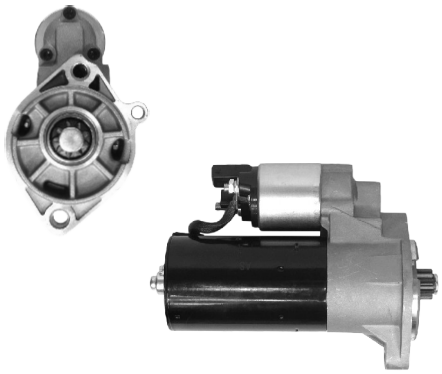

AS S0169

ORIGINAL
0001125503
0001125504
0001125513
0001125514

HC PARTS
CS1115
2(2) 2.0 kW 12V
A:82.5 B:20.5
t9 (CW)

AS S0170

ORIGINAL
0001368085

3(0) 4.0 kW 24V
A:89 B:22.2
t10 (CW)

AS S0171

ORIGINAL
0001107427
0001107428
0986021210

HC PARTS
CS1394
2(2) 1.2 kW 12V
A:82.5 B:14.5
t9 (CW)

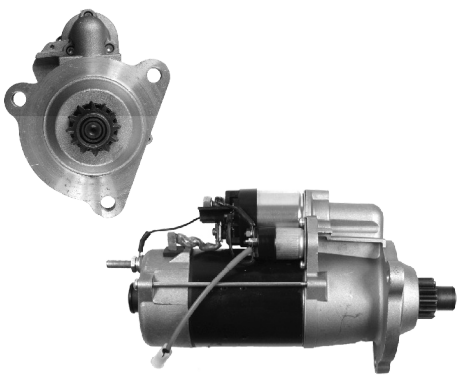

AS S0172

ORIGINAL
0001330007

3 6.0 kW 24V
A:92 B:51
t12 (CW)

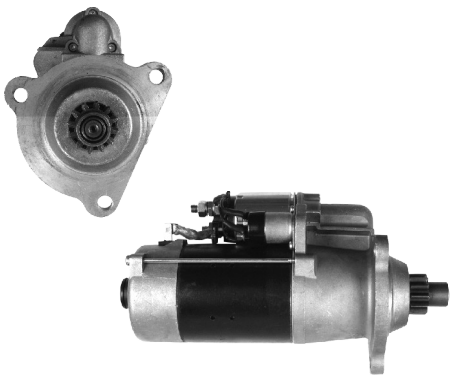

AS S0173

ORIGINAL
0001330008
0986022250

HC PARTS
CS1400
3(0) 6.0 kW 24V
A:92 B:49
t12 (CW)

STARTERS
BOSCH

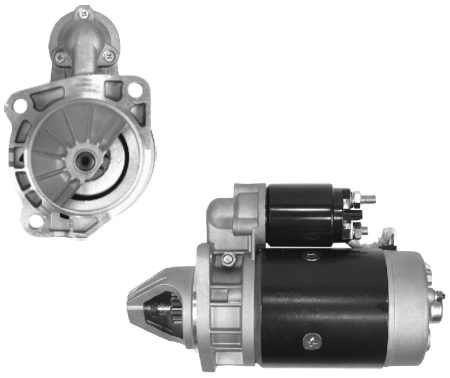

AS S0174

ORIGINAL
0001369014
0001369024
0986016550

HC PARTS
CS887
3(0) 3.1 kW 12V
A:89 B:28
t9 (CW)

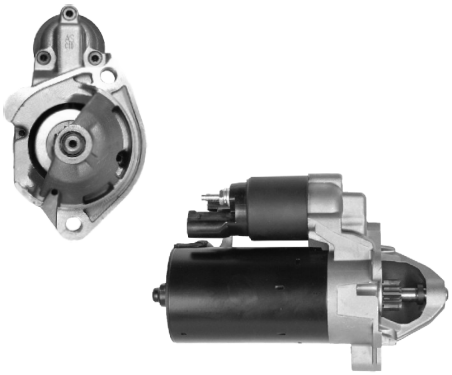

AS S0175

ORIGINAL
0001109064
0986021610

HC PARTS
CS1423
2(2) 2 kW 12V
A:82.5 B:15
t9 (CW)

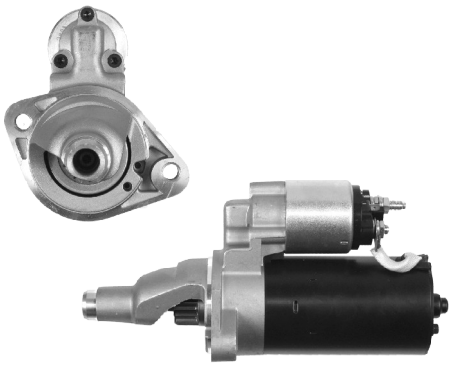

AS S0176

ORIGINAL
0001109021

HC PARTS
CS1114
2(2) 2.0 kW 12V
A:76 B:29
t10 (CW)

AS S0177

ORIGINAL
0001109258
0001109259

HC PARTS
CS1411
2(1) 2.2 kW 12V
A:76 B:24.5
t10 (CW)

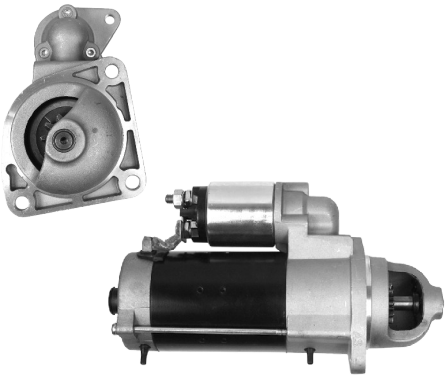

AS S0178

ORIGINAL
0001231017
0986021190

HC PARTS
CS1382
3(0) 4.0 kW 24V
A:89 B:26.5
t10 (CW)

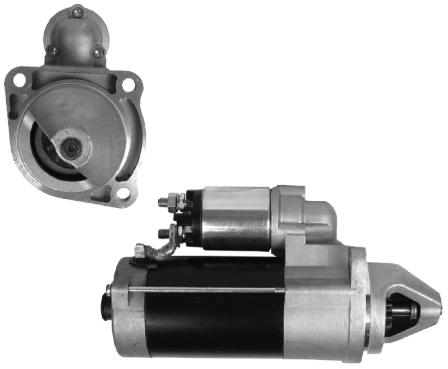

AS S0179

ORIGINAL
0001231026

3 4.0 kW 24V
A:89 B:30
t10 (CW)

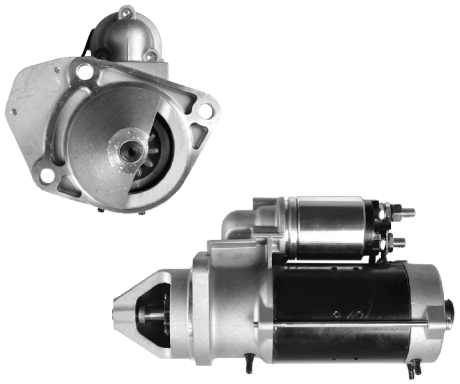

AS S0180

ORIGINAL
0001231023
0001231034

3 4.0 kW 24V
A:89 B:31
t11 (CW)

AS S0181

ORIGINAL
0001231035

3(0) 4.0 kW 24V
A:89 B:31
t10 (CW)

IVECO

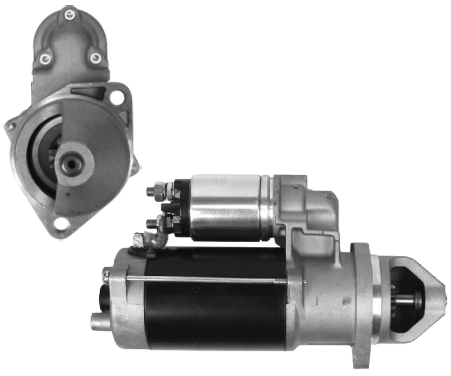

AS S0182

ORIGINAL
0001231018

2 4.0 kW 24V
A:82.5 B:27
t9 (CW)

KHD Deutz

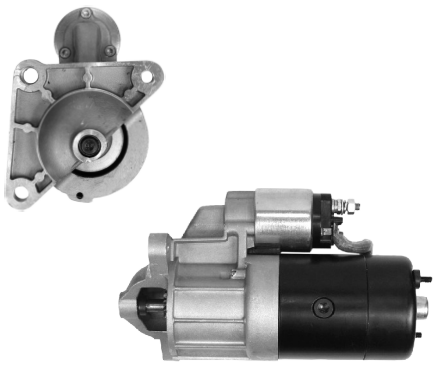

AS S0183

ORIGINAL
0001218002
0986010590
0986016611

HC PARTS
CS338
3(1) 2.2 kW 12V
A:80 B:-6.5
t10, 12 (CW)

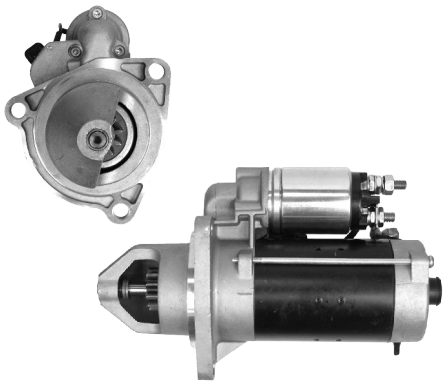

AS S0184

ORIGINAL
0001231036
0001231040

DAF

3(0) 4.0 kW 24V
A:110 B:48
t11 (CW)

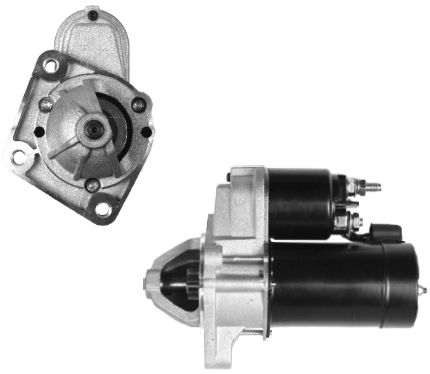

AS S0185

ORIGINAL
0001107410
0001107418
0986020900
F004A94410

HC PARTS
CS1289
3(3) 1.1 kW 12V
A:76 B:15
t10 (CW)

AS S0186R

ORIGINAL
0001108202
0001108234

R - rebuild

HC PARTS
CS1264
3(0) 1.7 kW 12V
A:82 B:8.5
t9 (CW)

AS S0187

ORIGINAL
0001108043
0001109001
0001109002
0986014580

HC PARTS
CS500
3(2) 1.4 kW 12V
A:82.5 B:14.5
t9 (CW)

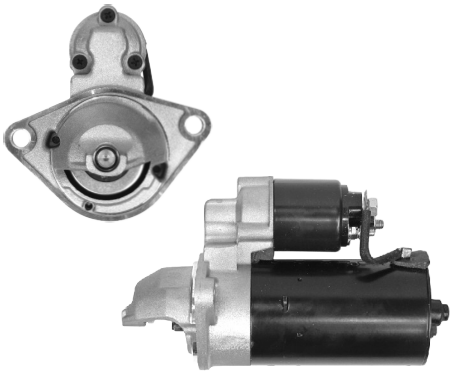

AS S0188

ORIGINAL
0001109035

2(0) 2.0 kW 12V
A:74 B:23
t9 (CW)

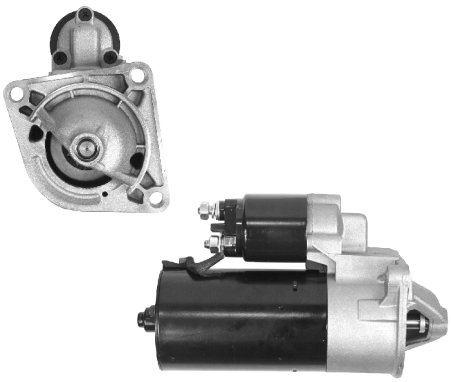

AS S0189

ORIGINAL
0001109267

3(0) 2.2 kW 12V
A:82 B:1
t9 (CW)

AS S0190R

ORIGINAL
0001112010
0986014810

R - rebuild

HC PARTS
CS559
2(0) 1.0 kW 12V
A:76 B:52.5
t10 (ACW)

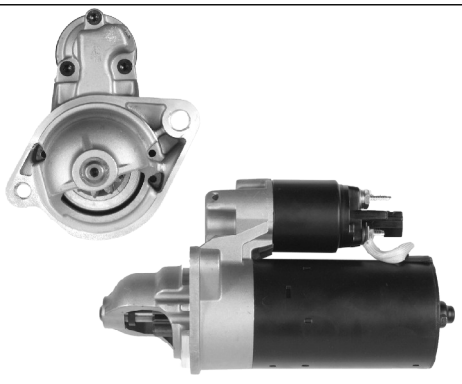

AS S0191

ORIGINAL
0001109260
0001109261

2(1) 2.2 kW 12V
A:76 B:24.5
t10 (CW)

STARTERS
BOSCH

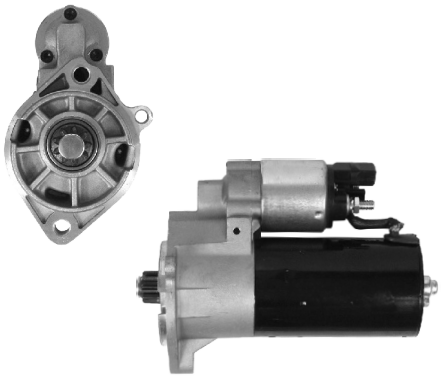

AS S0192

ORIGINAL	HC PARTS
0001125507	CS1187
0001125508	2(1) 2 kW 12V
0001125517	A:83 B:21
0001125518	t9 (CW)

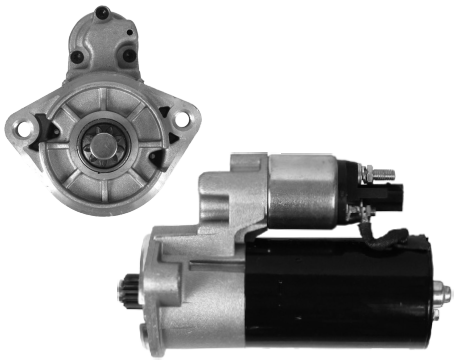

AS S0193

ORIGINAL	HC PARTS
0001125055	CS1435
0001125056	2(2) 2 kW 12V
0986021630	A:82.5 B:19
	t9 (CW)

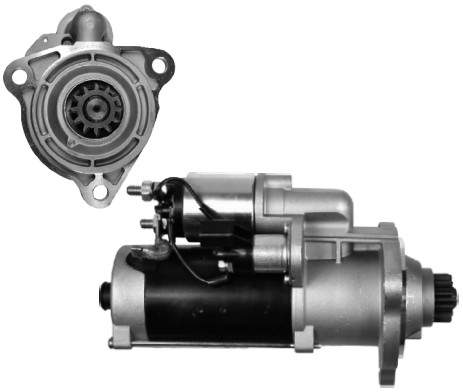

AS S0194

ORIGINAL	HC PARTS
0001241015	CS1420
0001241020	3(0) 5.5 kW 24V
	A:110 B:47
	t12 (CW)

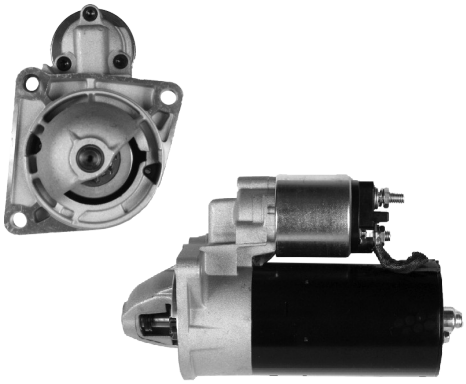

AS S0195

ORIGINAL	HC PARTS
0001109030	CS1045
0001115021	3(0) 2.0 kW 12V
0001115025	A:82 B:9
0986017790	t9, 11 (CW)

AS S0196

ORIGINAL	HC PARTS
0001368083	CS989
0986017520	3(0) 4 kW 24V
	A:89 B:38
	t9 (CW)

AS S0197

ORIGINAL	HC PARTS
0001368301	CS97
0001360010	3(0) 4 kW 24V
0001360038	A:89 B:47
0001368010	t9 (CW)

AS S0198

ORIGINAL	CARGO
0001367076	111793
0001359020	3(0) 3 kW 12V
0001359088	A:88.5 B:28.5
0001359117	t10 (CW)

AS S0199

ORIGINAL	
0001261014	
	24V
	t11 (CW)

AS S0200

ORIGINAL
0001262030

AS S0201

ORIGINAL
0001263019

AS S0202

ORIGINAL
0001231502

AS S0203

ORIGINAL
0001223006
0986020360

2 2.3 kW 12V
A:60 B:26
t10 (CW)

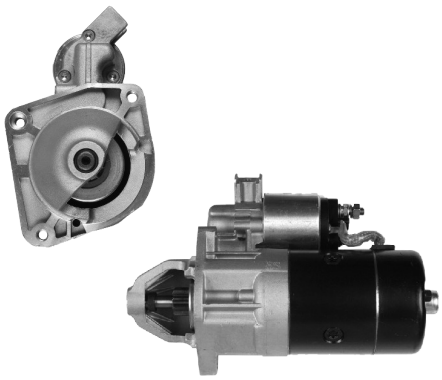

AS S0204

ORIGINAL
0001218008
0001218131
0001218145
0986013400

HC PARTS
CS376
3(3) 2.2 kW 12V
A:82.5 B:22.5
t9, 10 (CW)

AS S0205

ORIGINAL
0001218007
0001218126
0986012610

HC PARTS
CS507
2(0) 2.2 kW 12V
A:82.5 B:20.5
t11 (CW)

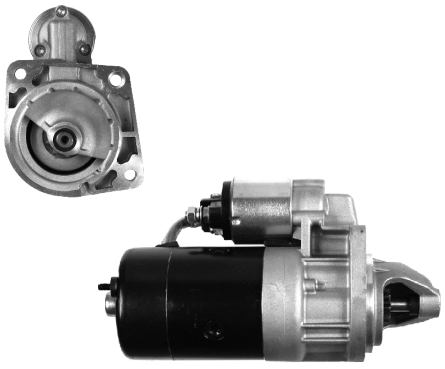

AS S0206

ORIGINAL
0001218177
0986017960

HC PARTS
CS1180
3(0) 2.2 kW 12V
A:82.5 B:20.5
t9 (CW)

AS S0207

ORIGINAL
0001126016

AS S0208

ORIGINAL
0001109017

CARGO
112496
3(1) 2 kW 12V
A:82.5 B:14.5
t11 (CW)

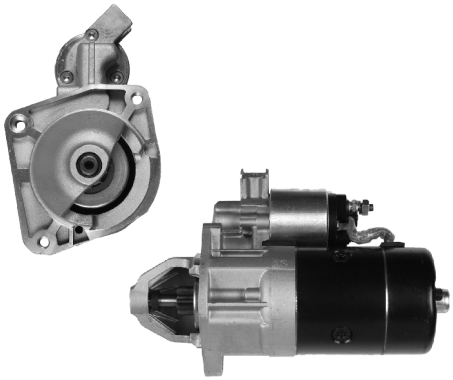

AS S0209

ORIGINAL
0001109029
0001110018
0001110033

CARGO
112034
2(0) 1.7 kW 12V
A:76 B:27
t9, 10 (ACW)

STARTERS
BOSCH

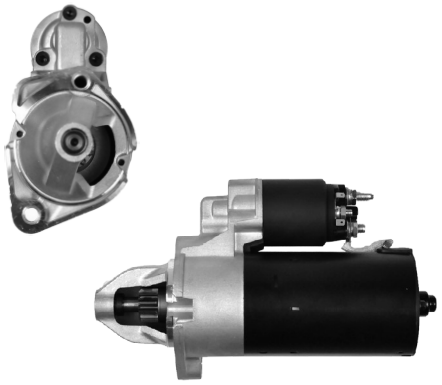

AS S0210

ORIGINAL
0001109262
0001109263
0986021270

2(0) 2.2 kW 12V
A:70 B:30
t10 (CW)

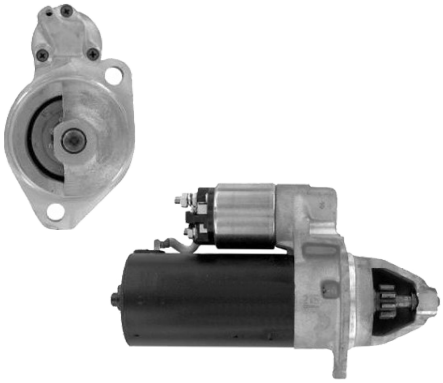

AS S0211

ORIGINAL
0001109008
0001109043

2(0) 1.6 kW 12V
A:82.5 B:40
t9 (CW)

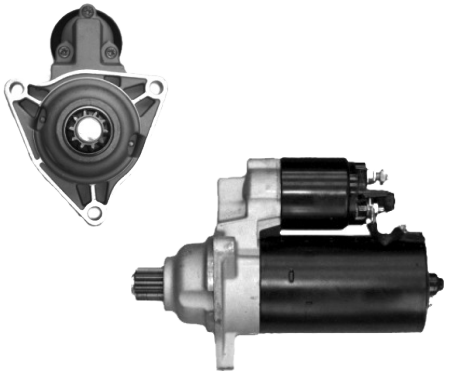

AS S0212

ORIGINAL
0001125016
0001125017
0001125046
0001125047

HC PARTS
CS1209
3(0) 2 kW 12V
A:76 B:68
t10 (ACW)

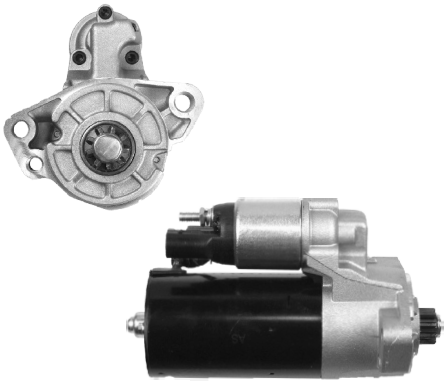

AS S0213

ORIGINAL
0001125519
0001125520

3 2 kW 12V
A:76 B:28
t9 (CW)

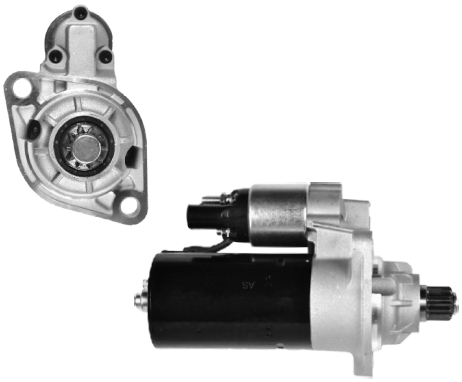

AS S0214

ORIGINAL
0001125605
0001125606
0986020270

HC PARTS
CS1405
2(0) 2.2 kW 12V
A:76 B:61.5
t10 (ACW)

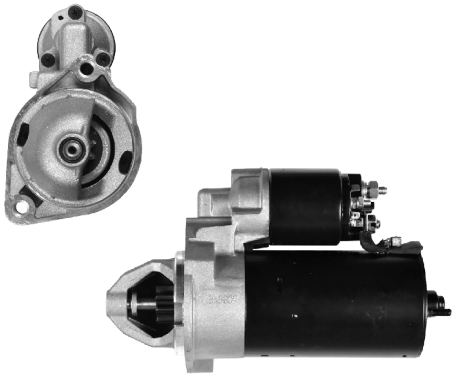

AS S0215

ORIGINAL
0001109057

2(0) 1.8 kW 12V
A:76.5 B:24
t9 (CW)

AS S0216

ORIGINAL
0001411016
0001415016
0001416009
0001416076

HC PARTS
CS506
3(0) 5.4 kW 24V
A:89 B:47
t11 (CW)

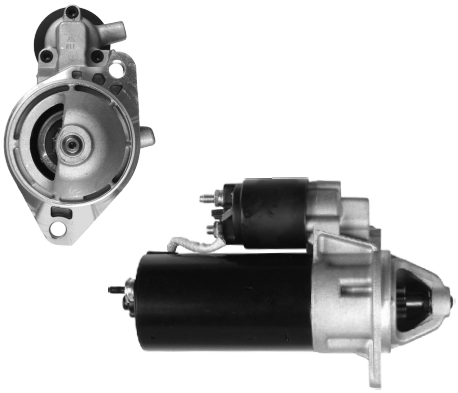

AS S0217

ORIGINAL
0001110012
0001110055
0001110115
0986013088

HC PARTS
CS322
2(1) 1.7 kW 12V
A:82 B:20
t9, 10 (CW)

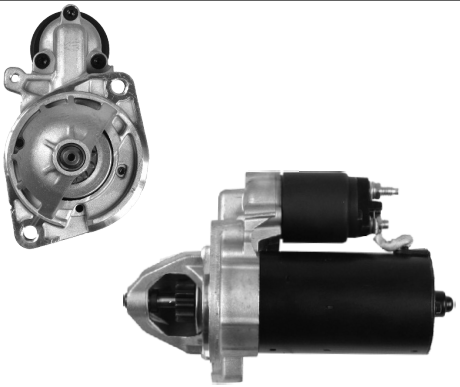

AS S0218

ORIGINAL
0001115047
0001115048
0001115074
0001115075

HC PARTS
CS1410
2(2) 1.7 kW 12V
A:82.5 B:26
t12 (CW)

AS S0219(BOSCH)R

ORIGINAL	HC PARTS
0001362003	CS113
0001362004	2(0) 2 kW 12V
	A:82 B:20
R - rebuild	t9 (CW)

AS S0220(BOSCH)R

ORIGINAL	HC PARTS
0001410098	CS121
0001410115	3(0) 6 kW 24V
	A:92 B:48
R - rebuild	t11 (CW)

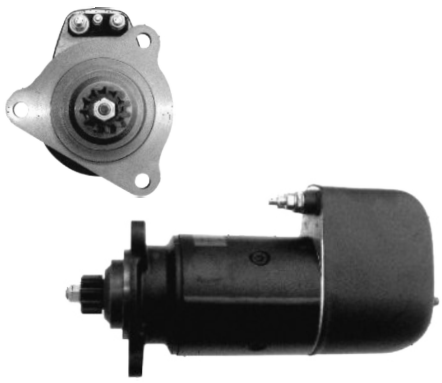

AS S0221(BOSCH)R

ORIGINAL	HC PARTS
0001415017	CS502
0001416011	3(0) 5.4 kW 24V
	A:92 B:46
R - rebuild	t11 (CW)

AS S0222(BOSCH)R

ORIGINAL	
0001416034	
B001410028	3(0) 5.4 kW 24V
	A:89 B:51
R - rebuild	t11 (CW)

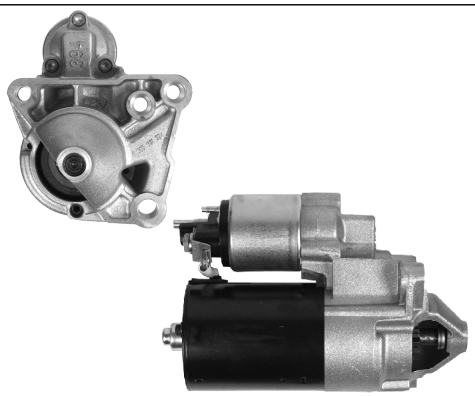

AS S0223(BOSCH)

ORIGINAL	HC PARTS
0001106023	CS1255
0001106024	4(3) 0.9 kW 12V
	A:66 B:1
	t9 (CW)

AS S0224

ORIGINAL	HC PARTS
0001125021	CS1200
0001125022	2(0) 2 kW 12V
0001125051	A:76 B:52
0001125052	t10 (ACW)

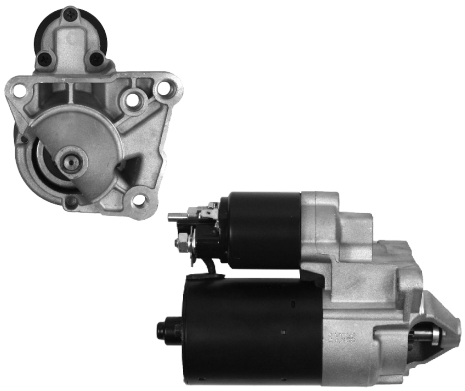

AS S0225

ORIGINAL	HC PARTS
0001106012	CS1179
0001106017	4(4) 0.9 kW 12V
0001106022	A:66 B:0
0986018360	t9 (CW)

AS S0226

ORIGINAL	HC PARTS
0001106018	CS1445
0986018830	2(0) 0.9 kW 12V
	A:74 B:25.5
	t9 (CW)

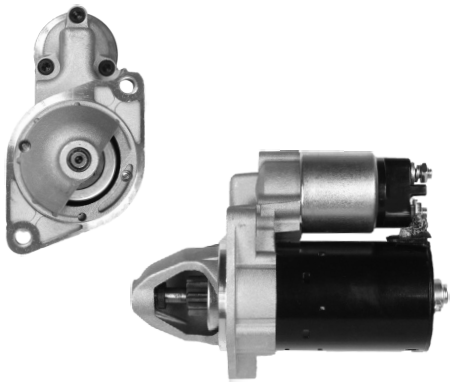

AS S0227

ORIGINAL	HC PARTS
0001107406	CS1283
0986020350	2(2) 1.1 kW 12V
	A:70 B:27
	t9 (CW)

STARTERS
BOSCH

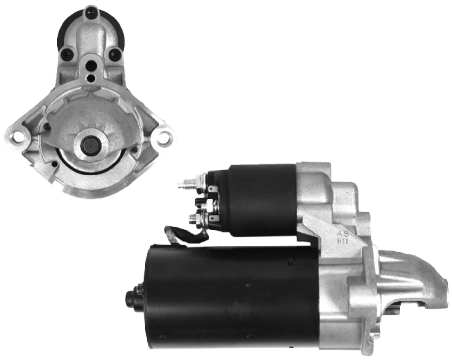

AS S0228

ORIGINAL	HC PARTS
0001115040	CS1406
0001115041	2(2) 1.8 kW 12V
0001115045	A:74 B:21
0001115046	t9 (CW)

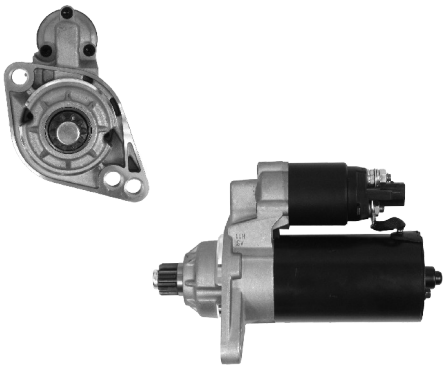

AS S0229

ORIGINAL	HC PARTS
0001123020	CS1397
0001123021	2(0) 1.7 kW 12V
0986020320	A:76 B:57.5
	t10 (ACW)

AS S0230

ORIGINAL	HC PARTS
0001109030	CS1335
0001109045	3(0) 2.2 kW 12V
0001109253	A:82 B:8.5
0001109268	t9 (CW)

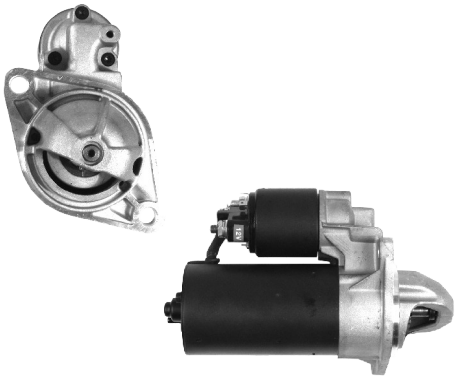

AS S0231

ORIGINAL	HC PARTS
0001115015	CS1247
0001115020	2(0) 1.7 kW 12V
0986019970	A:76 B:19
	t9 (CW)

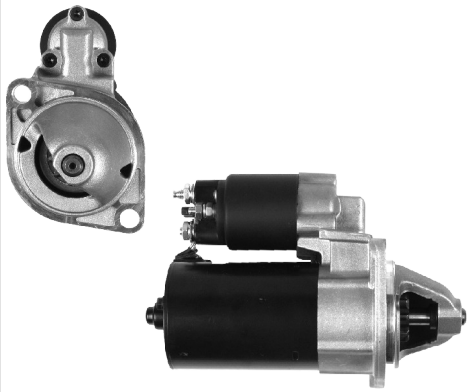

AS S0232

ORIGINAL	
0001107083	
0001107430	2(0) 1.1 kW 12V
	A:76 B:18
	t9 (CW)

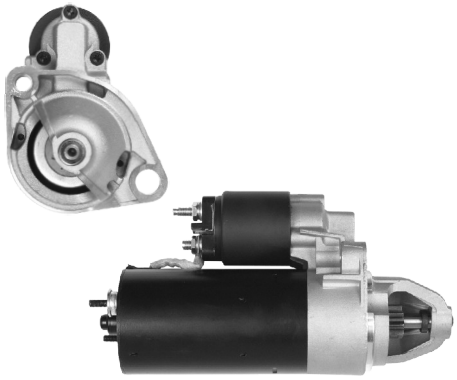

AS S0233

ORIGINAL	HC PARTS
0001110100	CS1041
0001110101	2(1) 1.8 kW 12V
0986018060	A:76 B:27.5
	t9 (CW)

AS S0234

ORIGINAL	HC PARTS
0001124020	CS1208
0001124021	2(2) 1.8 kW 12V
0986020370	A:82.5 B:2.5
	t9 (CW)

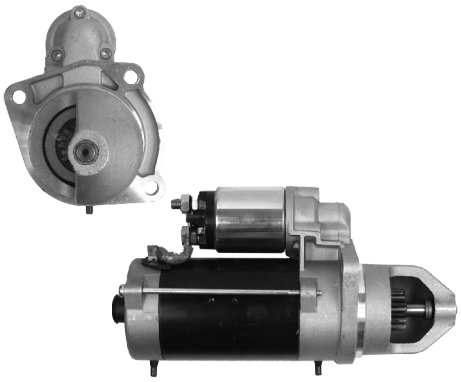

AS S0235

ORIGINAL	HC PARTS
0001231012	CS388
0001360026	3(0) 4 kW 24V
0001360058	A:89 B:48
0001368034	t10 (CW)

AS S0236

ORIGINAL	HC PARTS
0001218003	CS361
0001218020	3(3) 2.2 kW 12V
0001218620	A:98.5 B:36
0986010600	t11, 12 (CW)

AS S0237

ORIGINAL
0001137001
0001137002

3 1.1 kW 12V
A:64 B:14
t9 (CW)

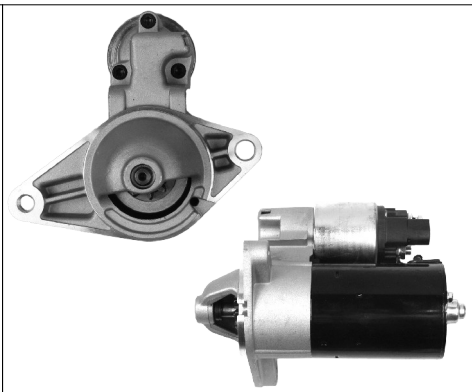

AS S0238

ORIGINAL
0001107030
0001107075
B001110240

HC PARTS
JS1105
2(1) 1.1 kW 12V
A:74 B:9
t9 (CW)

AS S0239

ORIGINAL
0001107038
0001107010
0001107092

HC PARTS
JS1079
2(0) 1.1 kW 12V
A:70 B:11
t8 (CW)

AS S0240

ORIGINAL
0001107070
0001107071
0986020850

HC PARTS
CS1064
2 1.1 kW 12V
A:76 B:31
t9 (CW)

AS S0241

ORIGINAL
0001107066
0001107411
0986017770
0986019930

HC PARTS
CS1053
3(0) 1.1 kW 12V
A:66 B:10
t9 (CW)

AS S0242

ORIGINAL
0001107423
0001107424
0986021500

HC PARTS
CS1412
2(1) 1.2 kW 12V
A:76 B:25
t9 (CW)

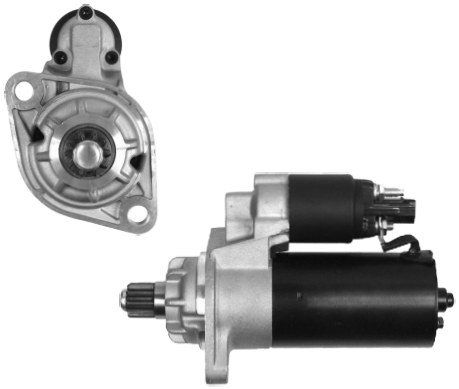

AS S0243

ORIGINAL
0001123014
0001123015
0001123038
0001123039

HC PARTS
CS1323
2(0) 2 kW 12V
A:76 B:62
t10 (ACW)

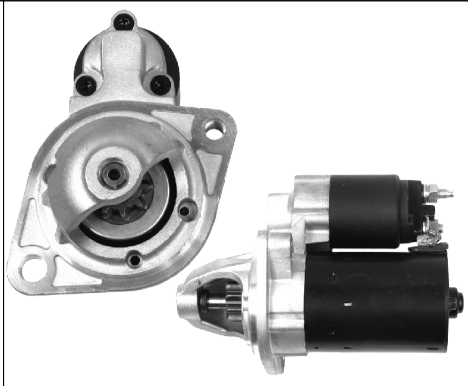

AS S0244

ORIGINAL
0001107425
0001107426
0986020890

HC PARTS
CS1413
2(1) 1.2 kW 12V
A:76 B:25
t9 (CW)

AS S0245

ORIGINAL
0001411036

3(0) 6.5 kW 24V
A:89
t11 (CW)

AS S0246

ORIGINAL	HC PARTS
0001108204	CS1212
0001109048	3(0) 1.8 kW 12V
0986018450	A:82 B:10
	t9, 11 (CW)

AS S0247R

ORIGINAL	HC PARTS
0001112012	CS592
0001112016	3(3) 0.9 kW 12V
	A:76 B:14.5
R - rebuild	t10 (CW)

AS S0248

ORIGINAL	HC PARTS
0001125018	CS1181
0001125019	2(0) 2.0 kW 12V
0001125048	A:76 B:62
0001125049	t10, 11 (ACW)

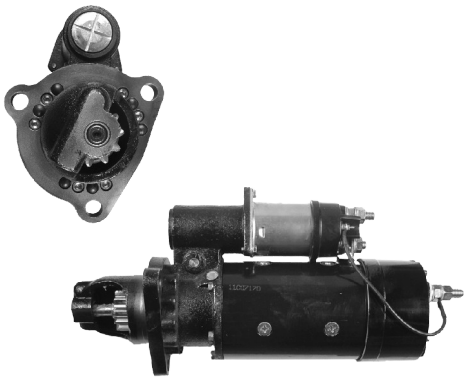

AS S1001

ORIGINAL	HC PARTS
10461024	US864
10461030	3(0) 7.5 kW 24V
10461047	A:92 B:47
	t11 (CW)

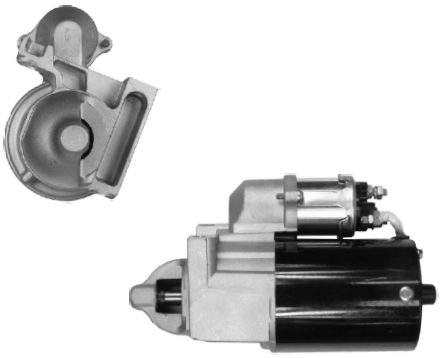

AS S1002

ORIGINAL	HC PARTS
10455006	US810
1109526	2(0) 12V
1109538	A: B:
1998544	t9 (CW)

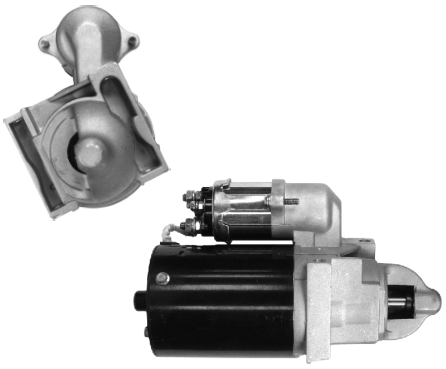

AS S1003

ORIGINAL	HC PARTS
10455013	US858
10455042	2(0) 1.8 kW 12V
10455050	A:68.5 B:
1998524	t9 (CW)

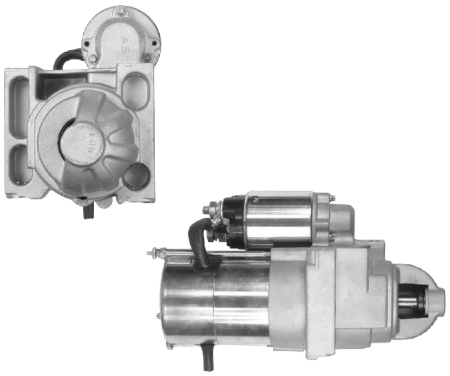

AS S1004

ORIGINAL	HC PARTS
9000786	US1029
	2(0) 2.0 kW 12V
	A:62 B:11
	t11 (CW)

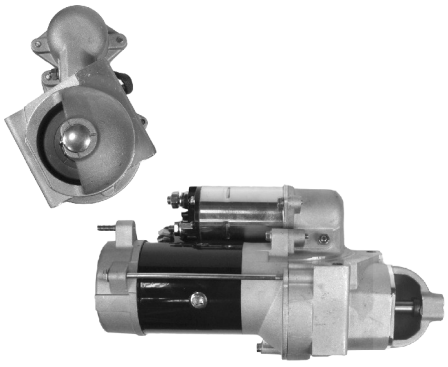

AS S1005

ORIGINAL	HC PARTS
1113266	US970
1113267	2(0) 2.5 kW 12V
1113269	A:82 B:8
1113270	t10 (CW)

AS S1006

ORIGINAL	HC PARTS
10478864	US823
	3(0) 7.5 kW 24V
	A:92.0 B:48.5
	t12 (CW)

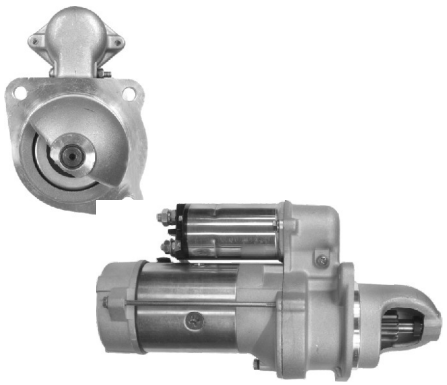

AS S1007

ORIGINAL	HC PARTS
1113277	US857
1113594	3(0) 4.5 kW 24V
	A:89 B:47
	t10 (CW)

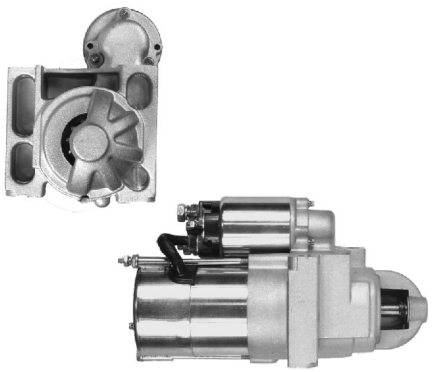

AS S1008

CARGO	HC PARTS
111786	US1240
	2(0) 1.4 kW 12V
	A:68.5 B:9.5
	t11 (CW)

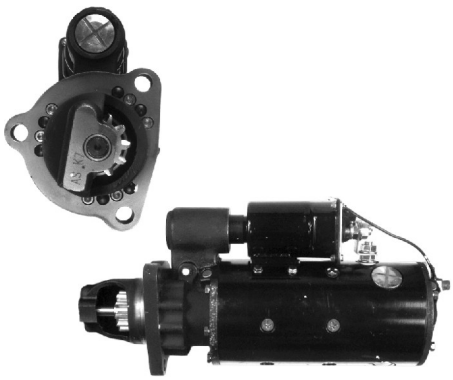

AS S1009

ORIGINAL	CARGO
10461057	110347
	3(0) 7.5 kW 24V
HC PARTS	A:92 B:47
US827	t11(CW)

STARTERS
DELCO

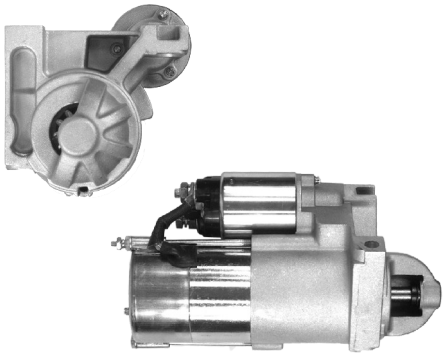

AS S1010

CARGO
111699

HC PARTS
CS1258
2(0) 1.7 kW 12V
A: B:
t11 (CW)

AS S1011

ORIGINAL
19011516

CARGO
113550
3(0) 12V
A:92 B:47
t11 (CW)

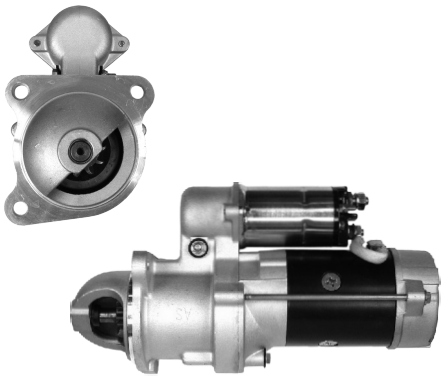

AS S1012

ORIGINAL
1109540
1113288
1998389

HC PARTS
US868

CARGO
111222
3(0) 2.8 kW 12V
A:89 B:19
t10 (CW)

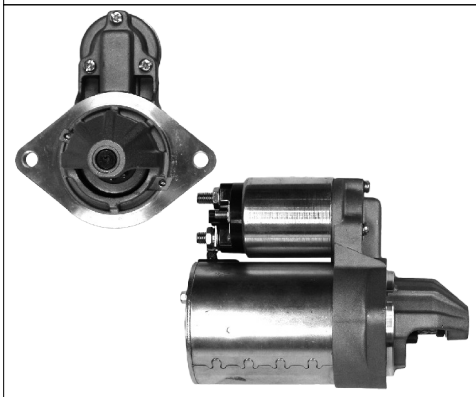

AS S1013

ORIGINAL
DRS0030
DRS7120

HC PARTS
CS162
2(0) 0.7 kW 12V
A:68 B:17
DELCO KOREA t9 (CW)

AS S1014

ORIGINAL
1113266
1113267
1113269
1113270

HC PARTS
CS519
2(0) 1.0 kW 12V
A:68 B:17
DELCO KOREA t8,9,10 (CW)

AS S1015

ORIGINAL
10461470

MERCEDES
004 151 62 01

HC PARTS
CS1381
3(0) 4 kW 24V
A:89 B:45
t9 (CW)

AS S1016

ORIGINAL
1990428
10461028
10461055
10479082

CARGO
113153
3(0) 7.5 kW 12V
A:92 B:46
t11 (CW)

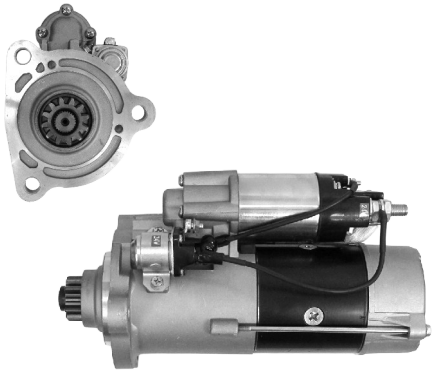

AS S1017

ORIGINAL
19011501
DRS8370

HC PARTS
CS1269
3(0) 6.2 kW 24V
A:92 B:48
t12 (CW)

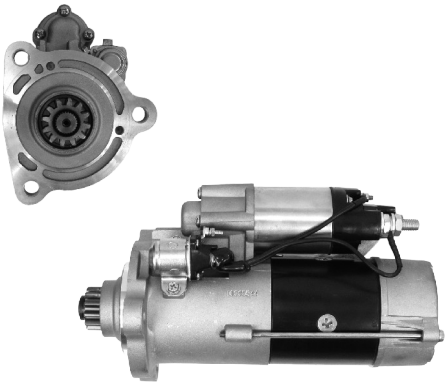

AS S1018

ORIGINAL
19011504
19011514

6.2 kW 12V

t12(CW)

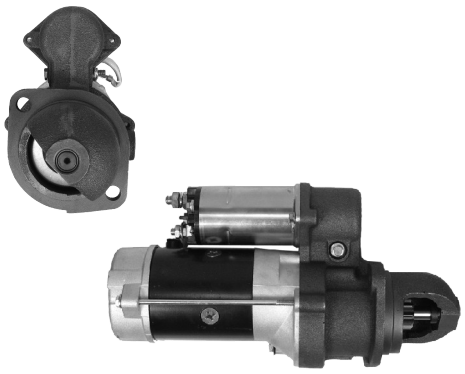

AS S1019

ORIGINAL
1113272
1998519
10461444

2(0) 4 kW 24V
A:82.5 B:33
t10 (CW)

AS S1020

ORIGINAL
10461081
10478806
1993963

CARGO
113126
3(0) 12V
A:89 B:47
t10 (CW)

AS S1021

ORIGINAL
10461006
10461011
1990347
1993767

CARGO
113125
3(0) 12V
A:92 B:48.3
t10 (CW)

AS S1022

ORIGINAL
10461005
10461044
1990308
1993738

CARGO
113123
3(0) 12V
A:92 B:47.3
t10 (CW)

AS S1023

ORIGINAL
1990499
1993701
1993741
1993986

CARGO
112256
3(0) 7 kW 24V
A:89 B:47.5
t10 (CW)

AS S1024

ORIGINAL
10479108
1993903
1993954

CARGO
112169
3(0) 4.5 kW 24V
A:89 B:46
t10 (CW)

STARTERS
HITACHI

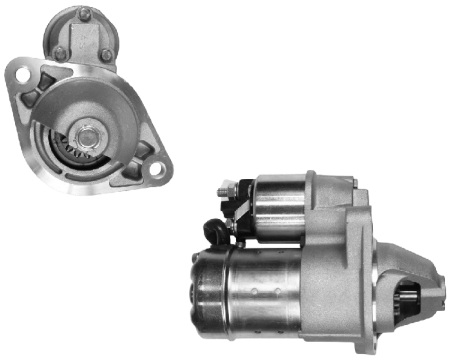

AS S2001

ORIGINAL	HC PARTS
S114-829	JS1158
	2(1) 1.4 kW 12V
	A:78 B:19.5
	t13 (CW)

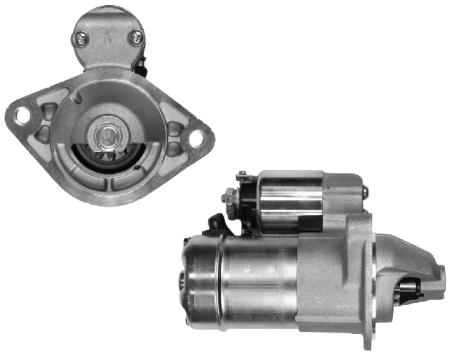

AS S2002

ORIGINAL	HC PARTS
S114-808	JS1091
	2(1) 1.2 kW 12V
	A:78 B:19
	t11 (CW)

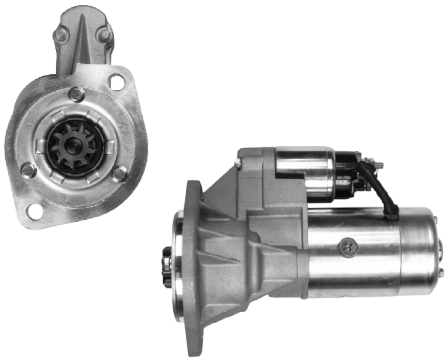

AS S2003

ORIGINAL	HC PARTS
S24-03A	JS748
S24-03B	2(0) 3.5 kW 24V
S24-03C	A:95 B:21
	t9 (CW)

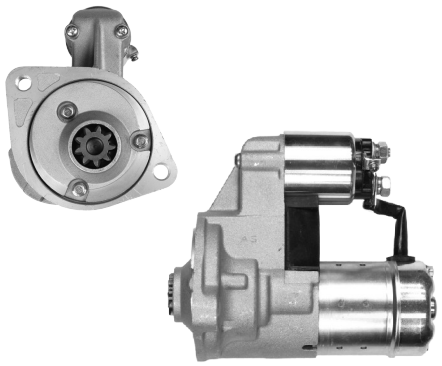

AS S2004

ORIGINAL	HC PARTS
S114-850	JS941
	2(1) 1.4 kW 12V
	A:78 B:19
	t9 (CW)

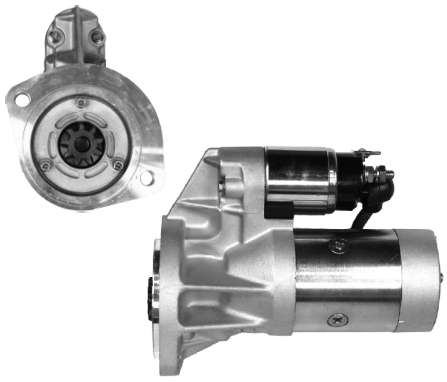

AS S2005

ORIGINAL	HC PARTS
S13-107	JS517
	2(0) 2.5 kW 12V
	A:95 B:10
w/or w/o bendixhousing	t9 (CW)

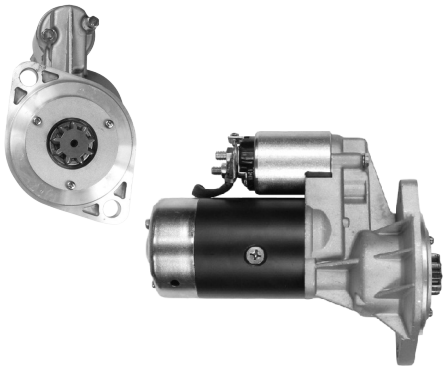

AS S2006

ORIGINAL		HC PARTS
S13-289	S13-89C	JS776
S13-89	S13-89D	2(0) 2.0 kW 12V
S13-89A		A:95 B:19.5
S13-89B		t9 (CW)

AS S2007

ORIGINAL	HC PARTS
S13-106	JS660
S13-106A	2(0) 2.0 kW 12V
S13-106B	A:95 B:12
S13-327	t9 (CW)

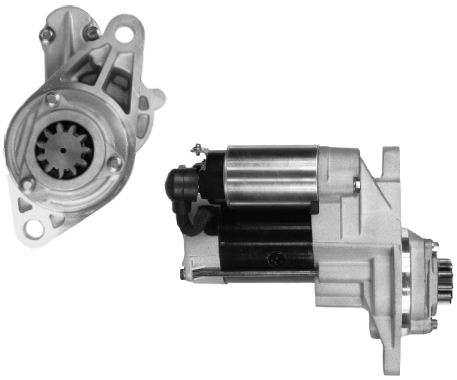

AS S2008

ORIGINAL	
S25-163	
	2(0) 3.2 kW 24V
	A:94 B:45
	t11 (ACW)

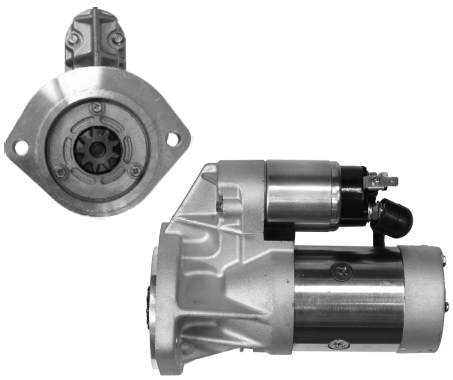

AS S2009

ORIGINAL	HC PARTS
S13-122	JS1159
	2(0) 2.2 kW 12V
	A:95 B:11
	t9 (CW)

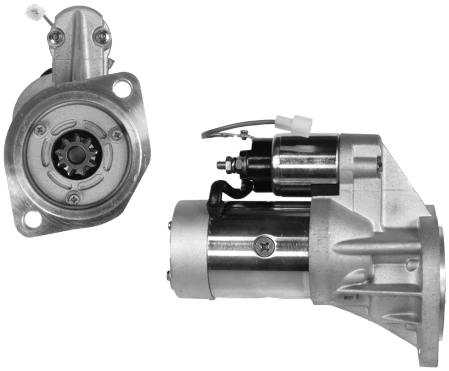

AS S2010

ORIGINAL
S14-03

HC PARTS
JS999
2(0) 2.8 kW 12V
A:95 B:11
t9 (CW)

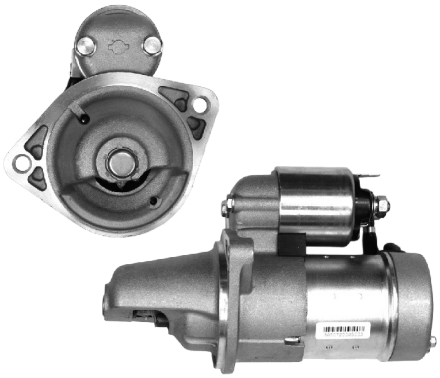

AS S2011

ORIGINAL
S114-806
S114-804A
S114-806
S114-806A

HC PARTS
JS1137
2(2) 1.4 kW 12V
A:82.5 B:44
t8 (CW)

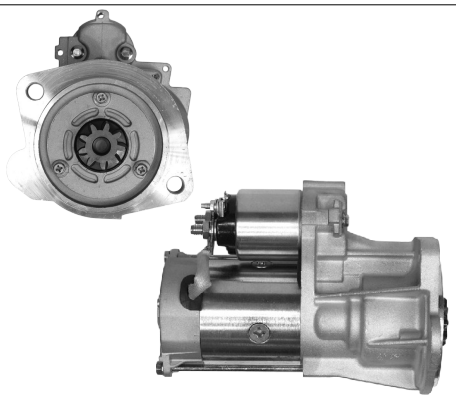

AS S2012

ORIGINAL
S13-527B
S13-556

HC PARTS
2(0) 2.8 kW 12V
A:95 B:10.5
t9 (CW)

AS S2013

ORIGINAL
S114-830

HC PARTS
2(0)
A:82.5 B:8
t8 (CW)

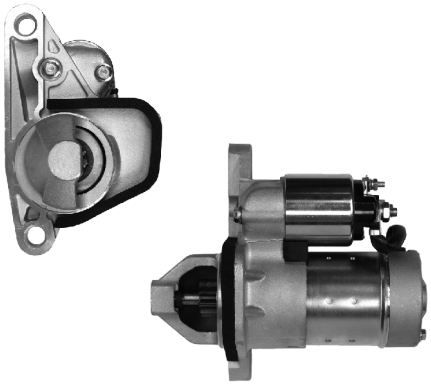

AS S2014

ORIGINAL
S114-902

HC PARTS
CS1418
2(0)
A:70 B:21
t10 (CW)

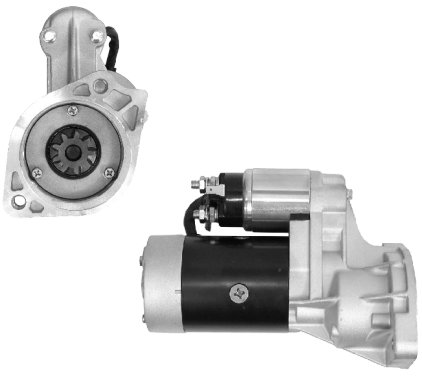

AS S2015

ORIGINAL
S13-105
S13-105A
S13-305
S114-357

HC PARTS
JS539, JS389
2(2) 2.0 kW 12V
A:82.5 B:3.5
t9 (CW)

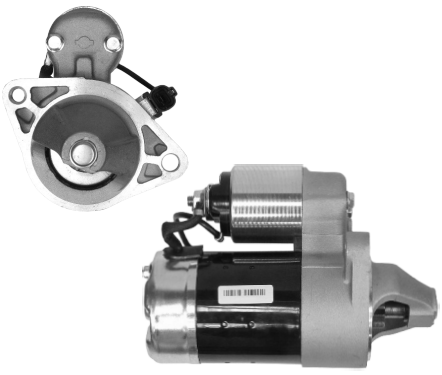

AS S2016

ORIGINAL
S114-520
S114-530
S114-750
S114-800

HC PARTS
JS1100
2(1) 1.2 kW 12V
A:70 B:12.5
t8 (CW)

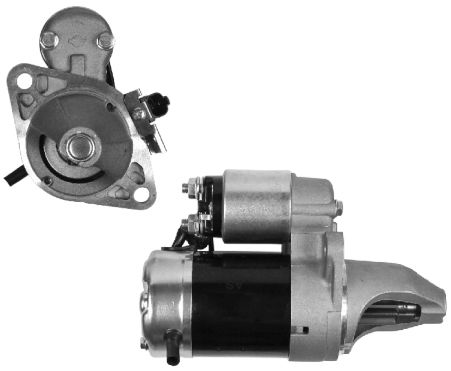

AS S2017

ORIGINAL
S114-535
S114-569
S114-630
S114-769

HC PARTS
JS759
2(0) 0.8 kW 12V
A:70 B:43
t8 (ACW)

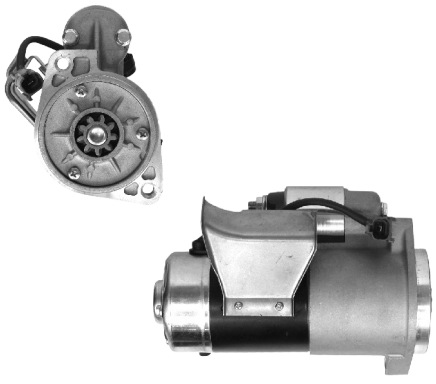

AS S2018

ORIGINAL
S114-528
S114-528A

HC PARTS
JS1104
2(2) 1.4 kW 12V
A:82.5 B:14.5
t9 (CW)

STARTERS
HITACHI

AS S2019

ORIGINAL
S114-443
S114-443A
S114-653
S114-653A

HC PARTS
JS1356
2(0) 0.9 kW 12V
A:80 B:13.5
t8 (CW)

AS S2020

ORIGINAL
S114-656A
S114-656
S114-203

2(0) 0.9 kW 12V
A:88.7 B:16
t9 (CW)

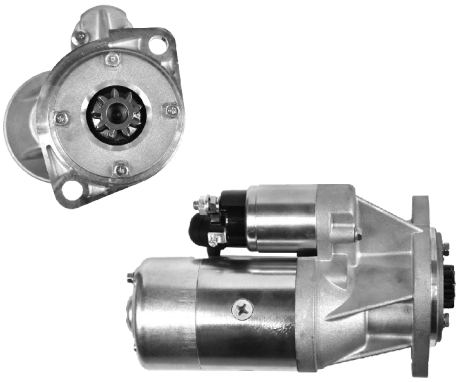

AS S2021

ORIGINAL
S13-160

2(0) 3 kW 12V
A:95 B:21
t9 (CW)

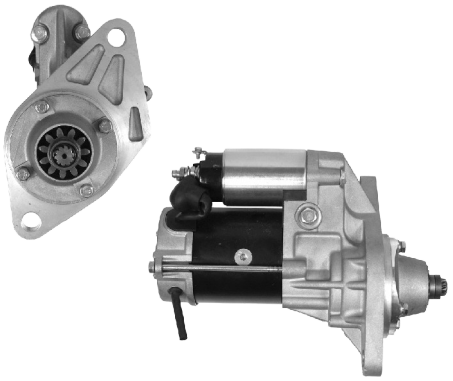

AS S2022

ORIGINAL
S25-505G

2(0) 4 kW 24V
A:94 B:45
t11 (ACW)

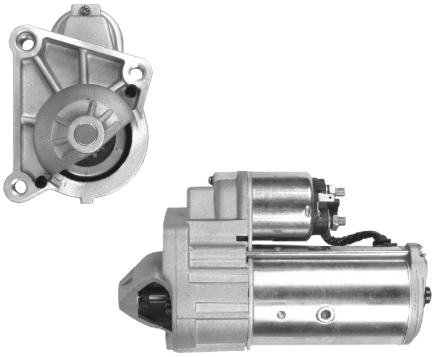

AS S3001

ORIGINAL		HC PARTS
0001110026	D7R13	CS684
0001110089	D7R18	3(3) 1.7 kW 12V
0001110095	D7R24	A:66 B:-1
0001110114		t10,11 (CW)

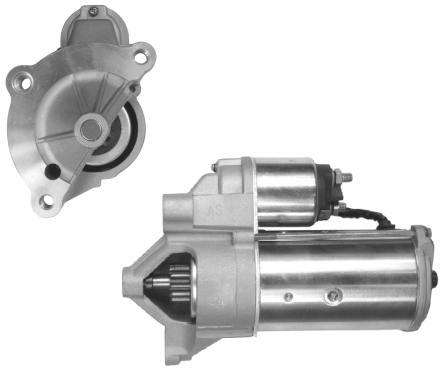

AS S3002

ORIGINAL		HC PARTS
M1T80081	M1T90281	CS594, CS1177
M1T80082	D7R12	3(3) 1.4 kW 12V
M1T80381	D7R2	A: B:-6
M1T80481	D7R26	t10,11,12,13 (CW)

AS S3003

ORIGINAL	HC PARTS
D6RA32	CS519
D6RA62	2(0) 1.0 kW 12V
D6RA162	A:68 B:17
	t8,9,10 (CW)

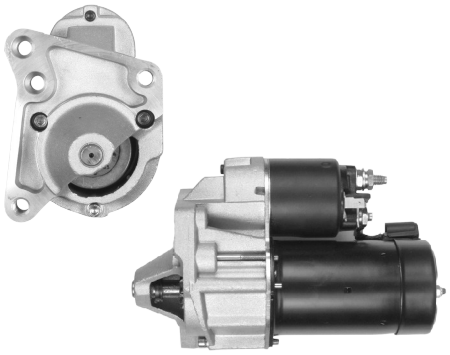

AS S3004

ORIGINAL	HC PARTS
D6RA33	CS681
D6RA46	4(4) 1.1 kW 12V
D6RA61	A:66 B:-2
	t9,10 (CW)

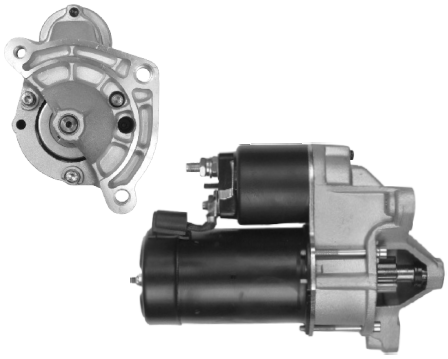

AS S3005

ORIGINAL	HC PARTS
D6RA10	CS390
D6RA20	3(1) 0.9 kW 12V
D6RA5	A:62 B:-5
	t9 (CW)

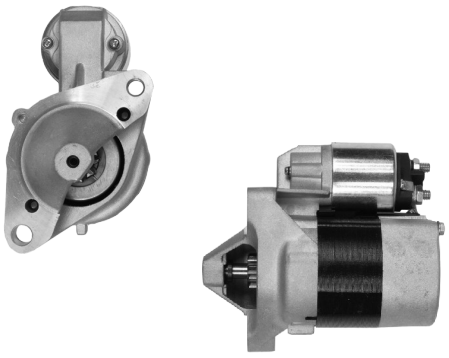

AS S3007

ORIGINAL	HC PARTS
D7E1	CS1057
0001116001	2(1) 0.7 kW 12V
	A:63 B:0.0
	t9 (CW)

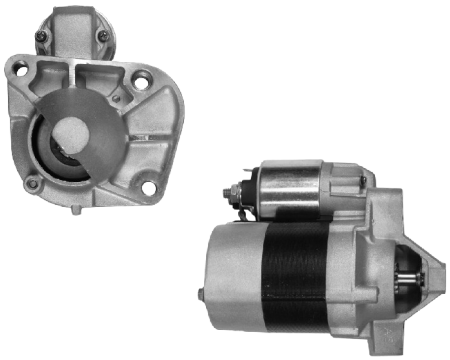

AS S3008

ORIGINAL	HC PARTS
D7E22	CS1174
D7E19	3(3) 1.0 kW 12V
D7E26	A: B:-2
	t8,9 (CW)

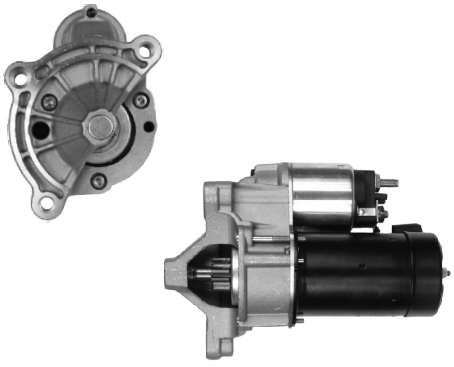

AS S3009

ORIGINAL		HC PARTS
D6RA16	D6RA66	CS566
D6RA161	D6RA661	3(3) 1.1 kW 12V
D6RA18	D6RA8	A: B:-4.5
D6RA38		t9,10 (CW)

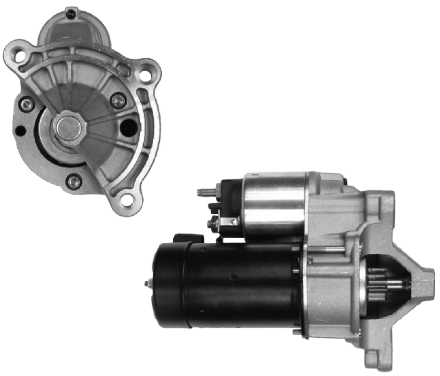

AS S3010

ORIGINAL		HC PARTS
432632	D6RA37	CS581
436062	D6RA57	3(1) 1.0 kW 12V
455748	D6RA571	A: B:-6
D6RA100	D6RA572	t9,10 (CW)

STARTERS
VALEO

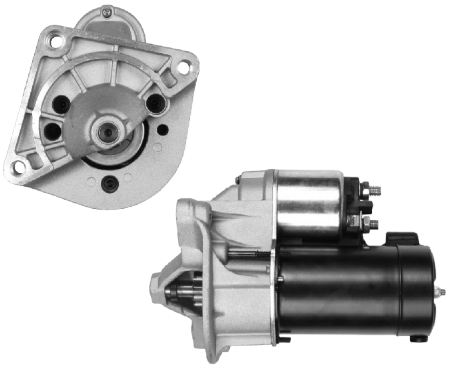

AS S3011

ORIGINAL
D6RA141
D6RA41

HC PARTS
CS791
3(3) 1.1 kW 12V
A: B:-5
t9 (CW)

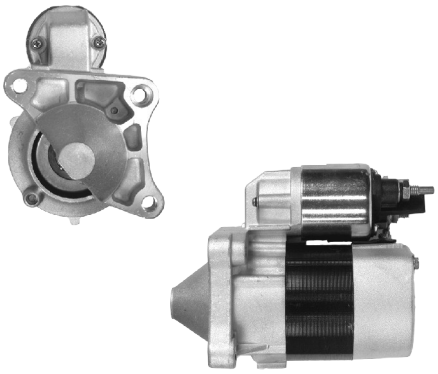

AS S3012

ORIGINAL
D7E27

HC PARTS
CS1276
3(0) 0.85 kW 12V
A: B:-3
t8 (CW)

AS S3013

ORIGINAL
D6RA76

HC PARTS
CS886
2(2) 1.3 kW 12V
A:71 B:3.5
t8 (CW)

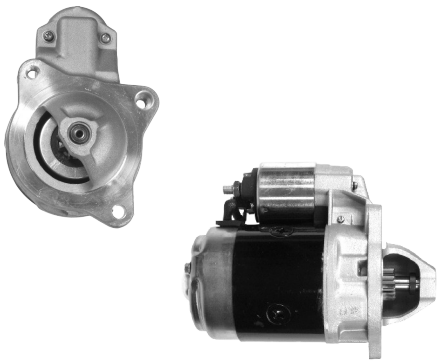

AS S3014

ORIGINAL
D9E278

HC PARTS
CS315
3(2) 0.9 kW 12V
A:66 B:10
t9 (CW)

AS S3015

ORIGINAL
D9E39

HC PARTS
CS310
4(4) 1.05 kW 12V
A:66 B:-2
t9,10 (CW)

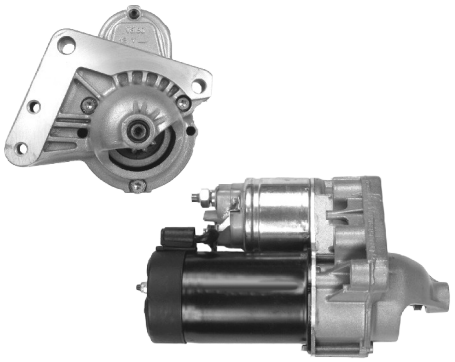

AS S3016

ORIGINAL
D6RA110

HC PARTS
CS1260
4(2) 1.1 kW 12V
A: B:15
t11 (CW)

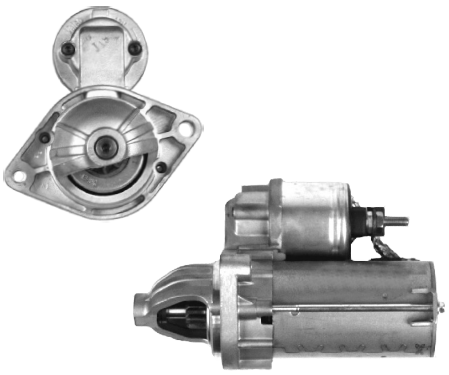

AS S3017

ORIGINAL
D6G1

HC PARTS
CS1346
2(1) 1.3 kW 12V
A:64 B:24
t9 (CW)

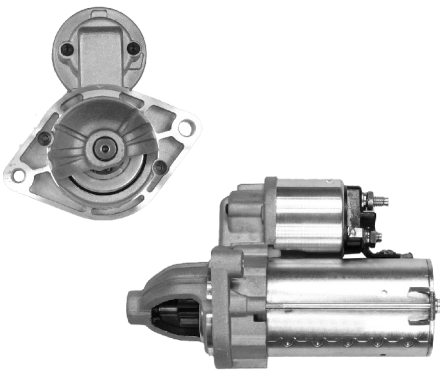

AS S3018

ORIGINAL
D6G33

HC PARTS
CS1334
2(1) 1.1 kW 12V
A:64 B:24
t9 (CW)

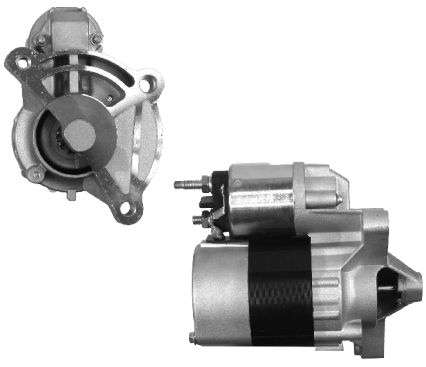

AS S3019

ORIGINAL
D7E7
0001116003

HC PARTS
CS1111
3(1) 0.7 kW 12V
A:62 B:-5
t8,9 (CW)

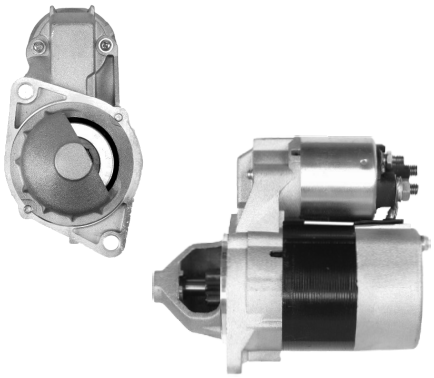

AS S3020

ORIGINAL
455747

HC PARTS
CS1117
2(0) 1 kW 12V
A:70 B:14
t8, 10 (CW)

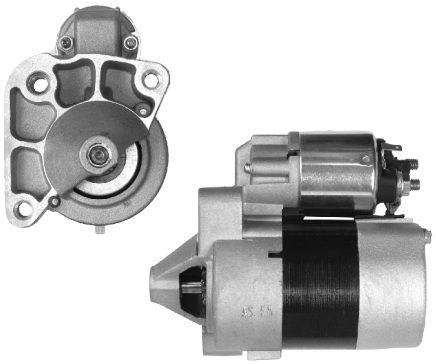

AS S3021

ORIGINAL
455950

HC PARTS
CS1186
3(3) 1 kW 12V
A:66 B:0.0
t8, 9 (CW)

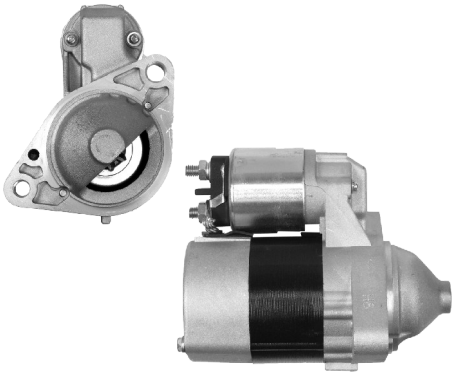

AS S3022

ORIGINAL
D7E30

HC PARTS
JS1307
2(1) 0.7 kW 12V
A:70 B:11
t8 (CW)

AS S3023

ORIGINAL
TS10E1

HC PARTS
CS1407
2(1) 1.1 kW 12V
A:74 B:25
t8, 9 (CW)

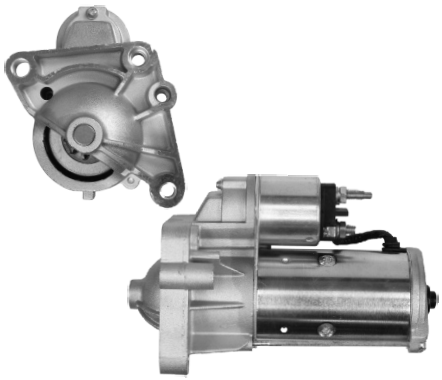

AS S3024

ORIGINAL
D7R34

HC PARTS
CS1207
3(2) 2 kW 12V
A: B:-6
t10 (CW)

AS S3025

ORIGINAL
D7R130

HC PARTS
CS974
2(0) 1.8 kW 12V
A:76 B:52.6
t10, 11 (ACW)

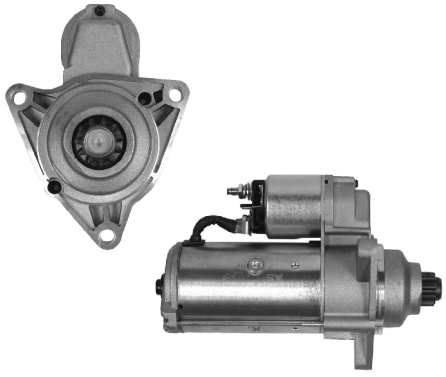

AS S3026

ORIGINAL
D7RS31

HC PARTS
CS801
3(0) 1.8 kW 12V
A:76 B:53
t10 (ACW)

AS S3027

ORIGINAL
D7R4 D8R27
D7R8
D7R12
D7R26

HC PARTS
CS1342
3(3) 1.7 kW 12V
A: B:-6
t10, 11, 12 (CW)

AS S3028

ORIGINAL
D8R1
438162
458178

HC PARTS
CS1288
3(2) 2.4 kW 12V
A: B:-6
t10 (CW)

STARTERS
VALEO

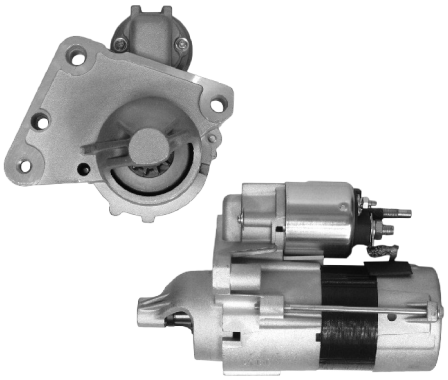

AS S3029

ORIGINAL
D7G3
190895

HC PARTS
CS1329
4(2) 1.5 kW 12V
A:65 B:13
t11 (CW)

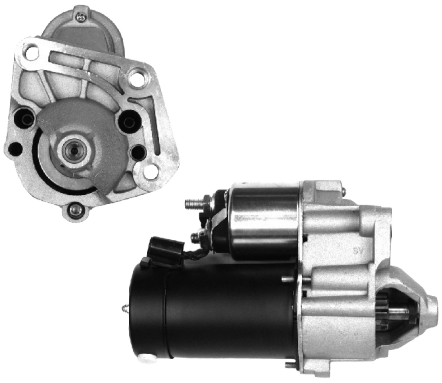

AS S3030

ORIGINAL
D6RA63

HC PARTS
CS1060
3(3) 1.1 kW 12V
A: B:-1
t9 (CW)

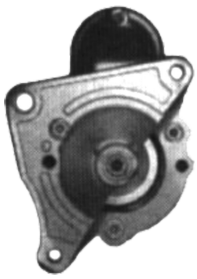

AS S3031

ORIGINAL
D6RA12

HC PARTS
CS551
3(2) 1.4 kW 12V
A:62 B:3
t9 (CW)

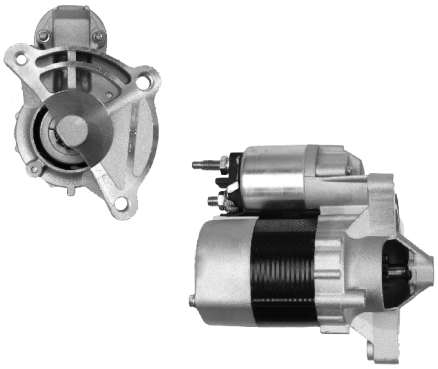

AS S3032

ORIGINAL
D7E2
D7E23
D7E5

HC PARTS
CS581
3(1) 1 kW 12V
A: B:-6
t9, 10 (CW)

AS S3034

ORIGINAL
D13HP603

HC PARTS
CS1164
3(0) 8 kW 24V
A:92 B:47
t11 (CW)

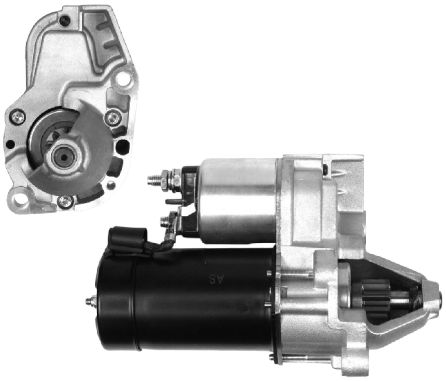

AS S3035

ORIGINAL
D6RA75
D6RA55

CARGO
111335
2(0) 1.1 kW 12V
A: B:14
t9 (ACW)

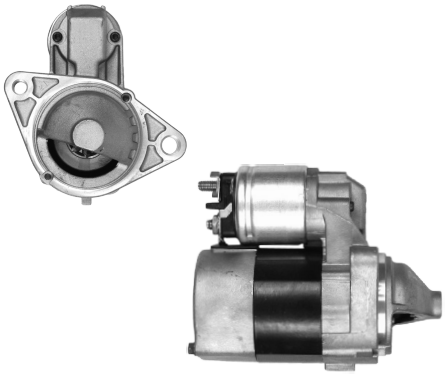

AS S3036

ORIGINAL
458159
D7E31

HC PARTS
JS1226
2(1) 0.7 kW 12V
A:70 B:-12.5
t8 (CW)

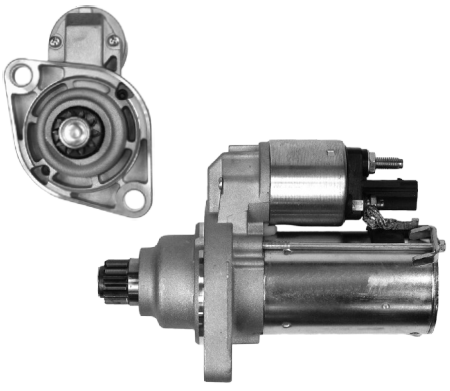

AS S3037

ORIGINAL
D6GS14

HC PARTS
CS1347
2(0) 1.1 kW 12V
A:76 B:62
t10 (ACW)

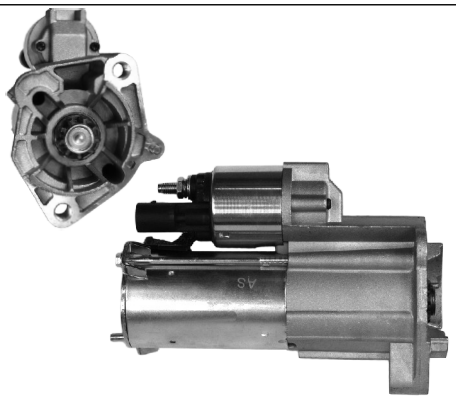

AS S3038

ORIGINAL
D6GS19

HC PARTS
CS1401
2(2) 1.1 kW 12V
A:82 B:3
t9 (CW)

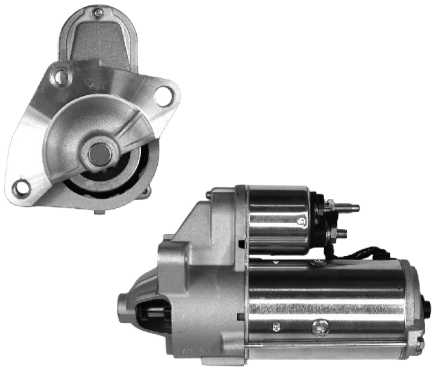

AS S3039

ORIGINAL
4502489

HC PARTS
CS1263
3(0) 2 kW 12V
A:71 B:-1.5
t11 (CW)

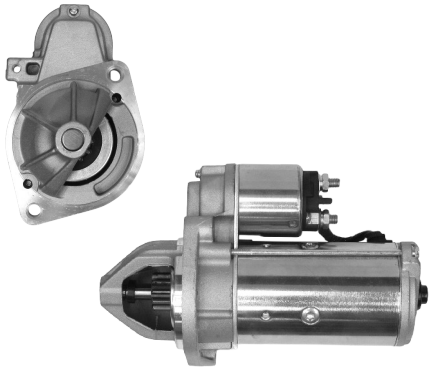

AS S3040

ORIGINAL
455720

HC PARTS
CS1044
2(2) 2 kW 12V
A:82.5 B:26
t10, 11 (CW)

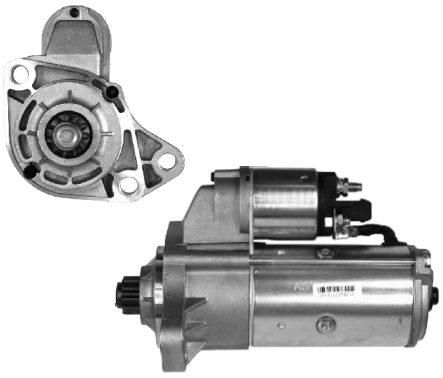

AS S3041

ORIGINAL
D7RS129

HC PARTS
CS789
2(0) 1.8 kW 12V
A:76 B:32
t9, 10 (ACW)

AS S3042

ORIGINAL
D9R116
D9R144
ND147

HC PARTS
CS1035
3(0) 3.1 kW 12V
A:89 B:49
t11 (CW)

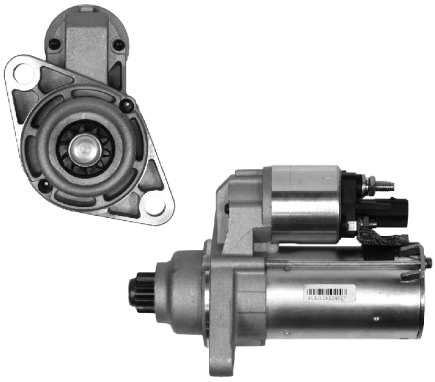

AS S3043

ORIGINAL
458215
D6GS13

HC PARTS
CS1324
2(0) 1 kW 12V
A:76 B:53
t10 (ACW)

AS S3044

ORIGINAL
458214
D6GS12

HC PARTS
CS1330
2(0) 1 kW 12V
A:76 B:52.5
t10 (ACW)

AS S3045

ORIGINAL
D6RA22
D6RA52
ND140
455634

HC PARTS
CS807
2(0) 1.1 kW 12V
A:76 B:15
t9 (CW)

AS S3046

ORIGINAL
D13HP702
455704

HC PARTS
CS1278
3(0) 7.7 kW 24V
A:102 B:23
t12 (CW)

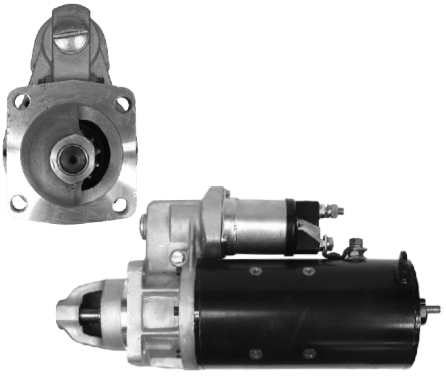

AS S3047

ORIGINAL
D13HP703
436098
436095

HC PARTS
CS983
3(0) 8 kW 24V
A:89 B:41
t12 (CW)

STARTERS
VALEO

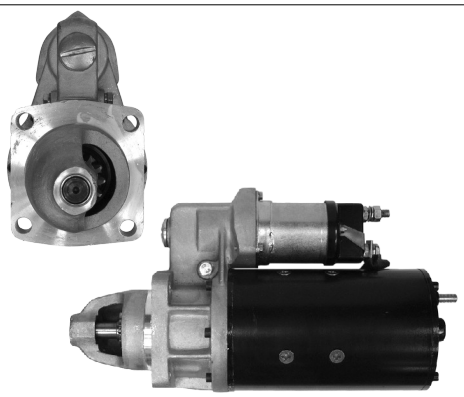

AS S3048

ORIGINAL	HC PARTS
D13HP605	CS1128
	4(0) 6.6 kW 24V
	A:89 B:40
	t12 (CW)

AS S3049

ORIGINAL	HC PARTS
D13HP607	CS1251
	3(0) 6.6 kW 24V
	A:102 B:23
	t12 (CW)

AS S3050

ORIGINAL	HC PARTS
D6RA40	CS991
	2(0) 1.1 kW 12V
	A:82.5 B:36
	t9 (CW)

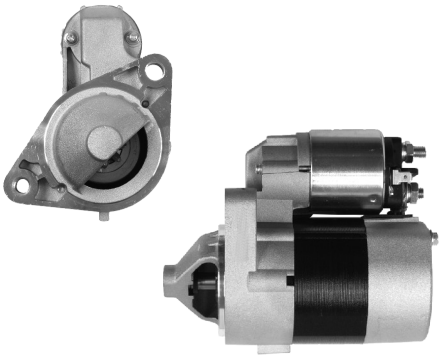

AS S3051

ORIGINAL	HC PARTS
455984	JS1305
D7E29	2(1) 0.7 kW 12V
	A:70 B:8
	t8 (CW)

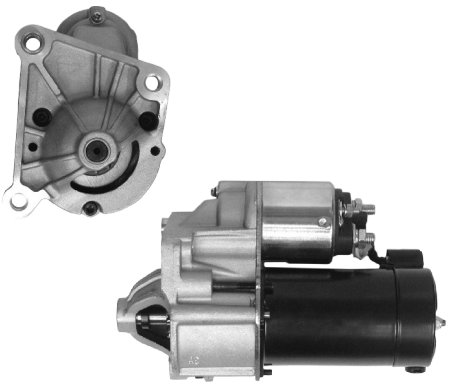

AS S3052

ORIGINAL	HC PARTS
D6RA101	CS784
D6RA104	3(3) 1.4 kW 12V
455936	A:66 B:0
438074	t9, 10, 11 (CW)

AS S3053

ORIGINAL	HC PARTS
D6RA78	JS923
M53486	2(2) 1.2 kW 12V
438017	A:77 B:17.5
455739	t8 (CW)

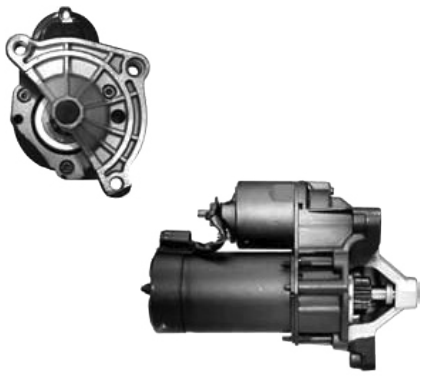

AS S3054

ORIGINAL	HC PARTS
D6RA51	CS621
D6RA511	3(3) 1.1 kW 12V
ND210	A: B:-6
VS282	t9 (CW)

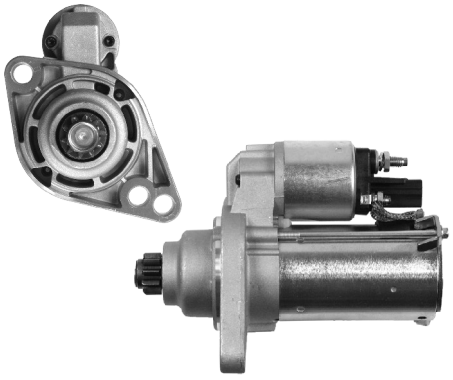

AS S3055

ORIGINAL	HC PARTS
458213	CS1294
D6GS11	3(0) 1.1 kW 12V
	A:76 B:53
	t10 (ACW)

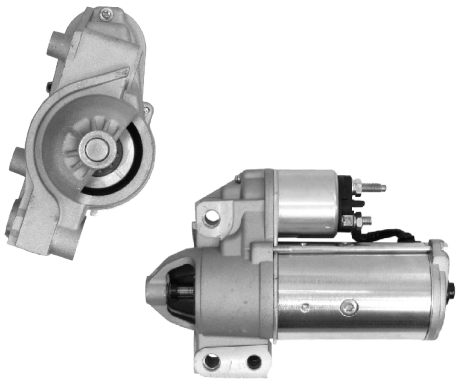

AS S3056

ORIGINAL	HC PARTS
D7R17	CS1108
D7RP82	3(0) 1.5 kW 12V
455734	A:89 B:41
ND168	t10 (CW)

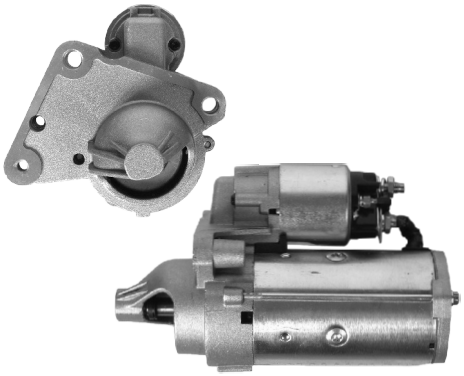

AS S3057

ORIGINAL	HC PARTS
438189	CS1391
458237	4(2) 2.2 kW 12V
D7G26	A: B:14
TS22E26	t11 (CW)

AS S3058

ORIGINAL	HC PARTS
438090	CS1193
D7R44	4(3) 1.8 kW 12V
	A: B:-1
	t11, 12 (CW)

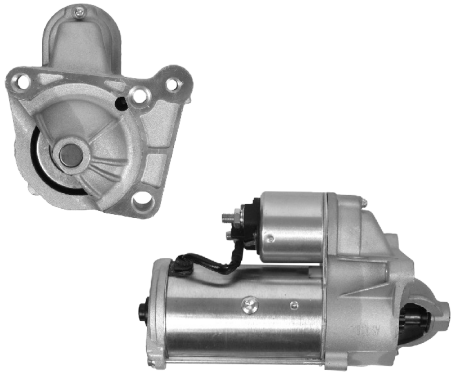

AS S3059

ORIGINAL	HC PARTS
438096	CS1281
455972	4(3) 2.1 kW 12V
D7R48	A:76 B:-1
	t11 (CW)

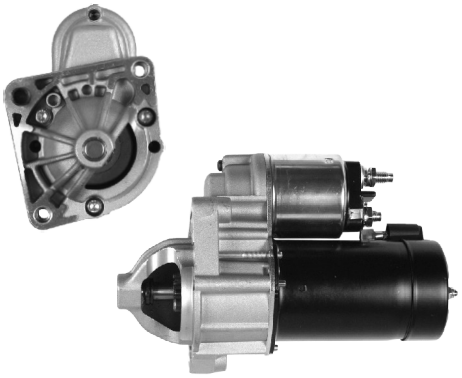

AS S3060

ORIGINAL	HC PARTS
D6RA137	CS1345
D6RA138	2(2) 1.3 kW 12V
D6RA187	A: B:10
D6RA188	t9 (CW)

AS S3061

ORIGINAL	HC PARTS
TS22E5	CS1415
TS22E5B	3(3) 2.2 kW 12V
TS22E8	A:76.5 B:13.5
TS22E9	t10 (CW)

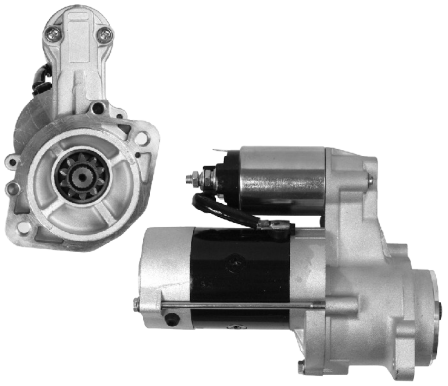

AS S3062

ORIGINAL	HC PARTS
600078	JS1355
1250128	2(2) 2.2 kW 12V
TM000A23601	A:79 B:19
	t10 (CW)

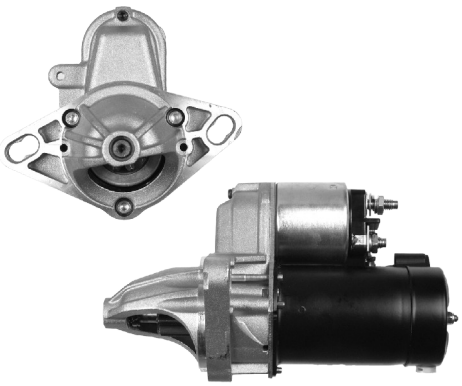

AS S3063

ORIGINAL	HC PARTS
D6RA67	JS1147
D6RA167	2(0) 1 kW 12V
438015	A:75 B:33.5
438082	t9 (CW)

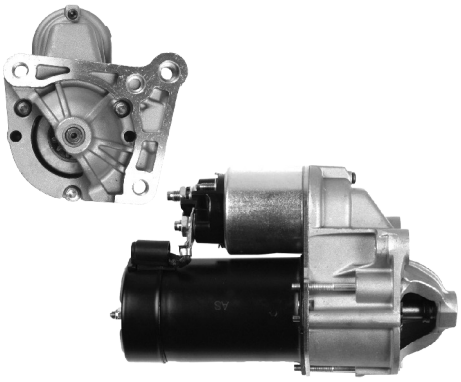

AS S3064

ORIGINAL	HC PARTS
D6RA105	CS1344
D6RA115	3(3) 1.2 kW 12V
	A: B:-1
	t11 (CW)

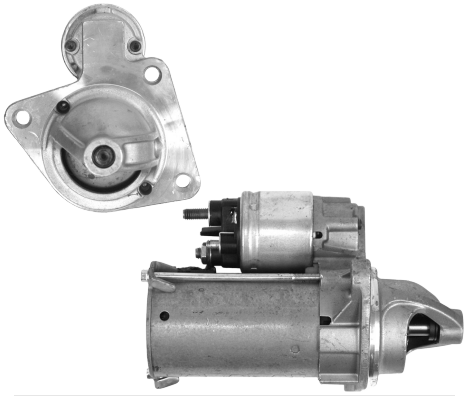

AS S3065(VALEO)

ORIGINAL	HC PARTS
458116	CS1050
458117	3(3) 1.1 kW 12V
458370	A:76 B:27
TS12E10	t10 (CW)

STARTERS
MAGNETI MARELLI/LUCAS

AS S4001

ORIGINAL		HC PARTS
26273		CS1032
26273A	26365	3(0) 2.8 kW 12V
26273B	26411	A:92 B:25.5
26273D	27540	t10 (CW)

AS S4002

ORIGINAL		HC PARTS
26196	26219B	CS107
26198	26271	3(0) 2.1 kW 12V
26219	26271B	A:89 B:29
26219A	26271H	t10 (CW)

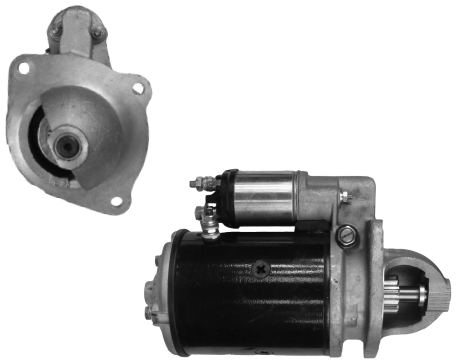

AS S4004

ORIGINAL		HC PARTS
0001359104	26338A	CS200
0001362067	26395	3(0) 2.8 kW 12V
0001367006		A:92 B:21.5
26211		t10 (CW)

AS S4005

ORIGINAL		HC PARTS
26274	26366	CS201
26320D	26410	3(0) 2.8 kW 12V
26323	27539	A:89 B:29
26345	6233A	t10 (CW)

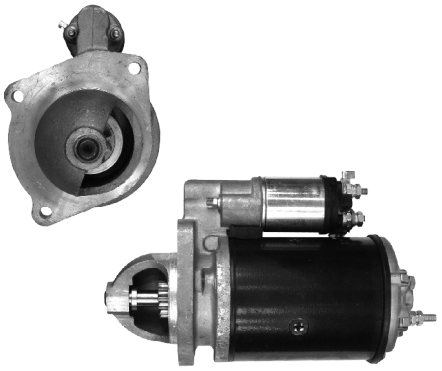

AS S4006

ORIGINAL		HC PARTS
26265	27554	CS336
26341	27554A	3(0) 2.8 kW 12V
26341E		A:92 B:20
26431		t10 (CW)

AS S4007

ORIGINAL		HC PARTS
0001358201	26355A	CS337
0001358202	26355J	3(0) 2.5 kW 12V
0001362307	26388	A:92 B:21
26355	26407	t12,13 (CW)

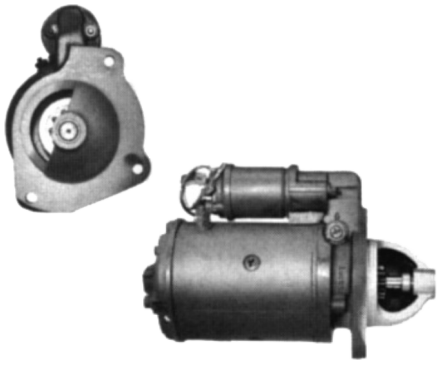

AS S4008

ORIGINAL		HC PARTS
0001367056		CS345
26430		3(0) 3.0 kW 12V
		A:92 B:20
		t10 (CW)

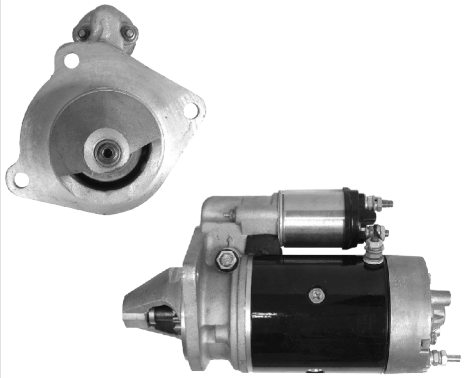

AS S4009

ORIGINAL		HC PARTS
27425	27460	CS590
27425B	27460A	3(0) 2.1 kW 12V
		A:92 B:19
		t9 (CW)

AS S4010

ORIGINAL		HC PARTS
0001367032	27512B	CS604
26342	27512D	3(0) 2.8 kW 12V
27512	27512F	A:89 B:47
27512A	AZJ3234	t11 (CW)

STARTERS
MAGNETI MARELLI/LUCAS

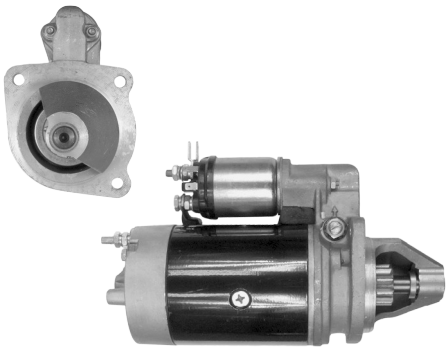

AS S4011

ORIGINAL		HC PARTS
26148	26283H	CS693
26196	26283J	3(0) 2.4 kW 12V
26283	26375	A:89 B:29
26283A	26422	t10 (CW)

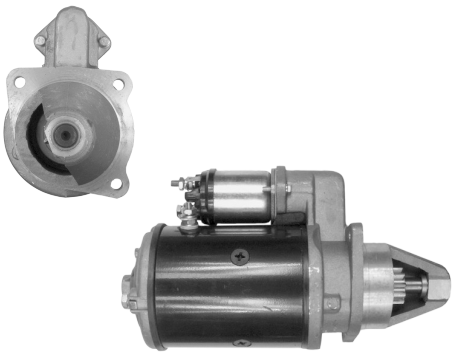

AS S4012

ORIGINAL	HC PARTS
26349	CS701
26416	3(0) 2.8 kW 12V
27543	A:89 B:47.5
	t10 (CW)

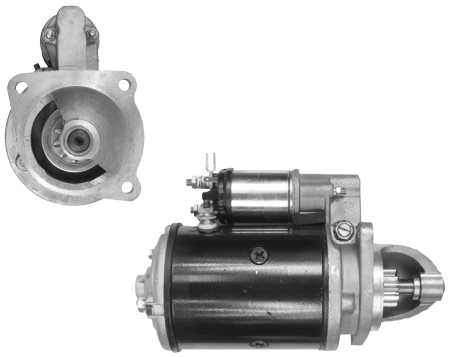

AS S4013

ORIGINAL		HC PARTS
0001367069	27518	CS703
26294A	27570	3(0) 2.8 kW 12V
26357	27588	A:89 B:30
26369	AZJ3151	t10 (CW)

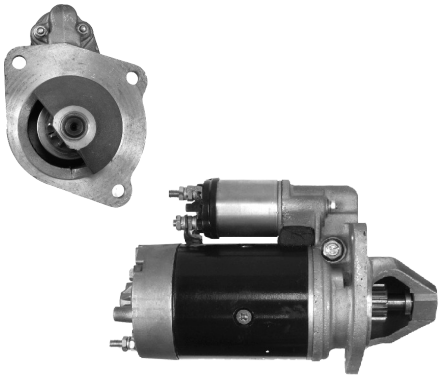

AS S4014

ORIGINAL		HC PARTS
0001362060	27413	CS705
26133		3(0) 2.0 kW 12V
26173		A:92 B:25
26278		t11 (CW)

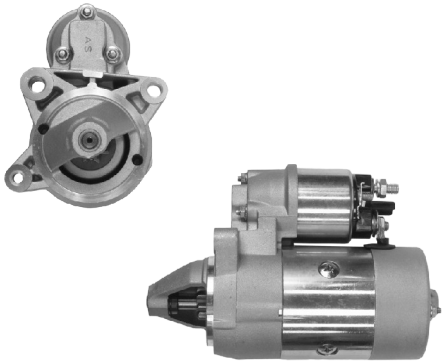

AS S4015

ORIGINAL	HC PARTS
63222904	CS981
63102003	3(1) 0.9 kW 12V
	A:64 B:10
	t9 (CW)

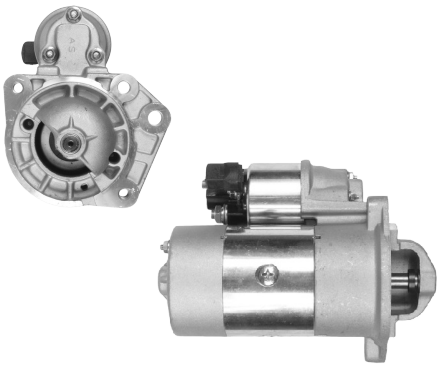

AS S4016

ORIGINAL	HC PARTS
63293039	CS788
0001112027	4(2) 0.9 kW 12V
	A:82.5 B:2.5
w/or w/o bendixhousing	t9 (CW)

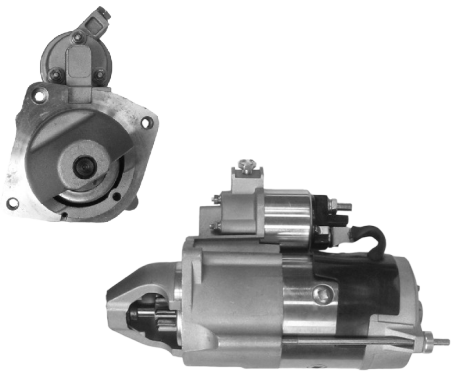

AS S4017

ORIGINAL	HC PARTS
63114014	CS1109
	3(3) 2.6 kW 12V
	A:81.5 B:23.5
	t9 (CW)

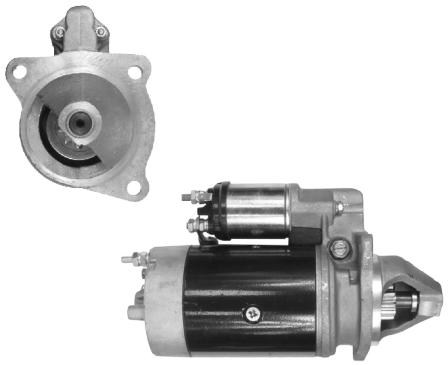

AS S4018

ORIGINAL		HC PARTS
26145	26412	CS109
26154	27409	3(0) 2.0 kW 12V
26200	27432	A:92 B:25
26264	27469	t10 (CW)

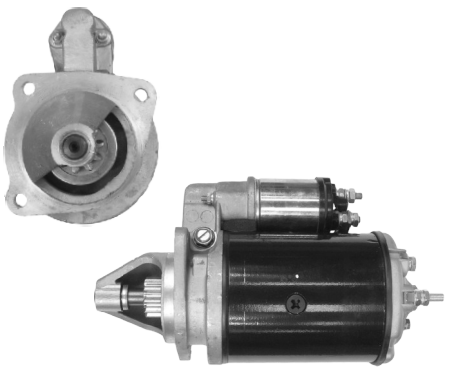

AS S4019

ORIGINAL		HC PARTS
26414	27590	CS994
27541	27599	3(0) 2.8 kW 12V
27565	LRS969	A:89 B:29
27568		t10 (CW)

STARTERS
MAGNETI MARELLI/LUCAS

AS S4020

ORIGINAL
63223101

HC PARTS
CS975
3(3) 0.9 kW 12V
A:64 B:11
t8,9 (CW)

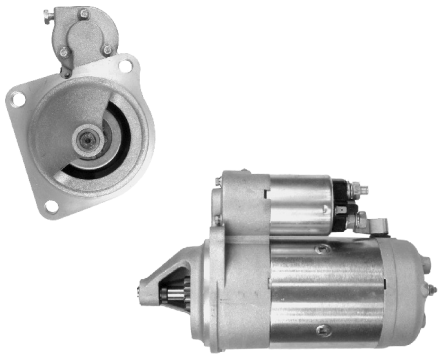

AS S4021

ORIGINAL
63217225
MT72A
MT72AA
MT72AB

HC PARTS
CS231
3(0) 3.2 kW 24V
A:110 B:26.5
t9 (CW)

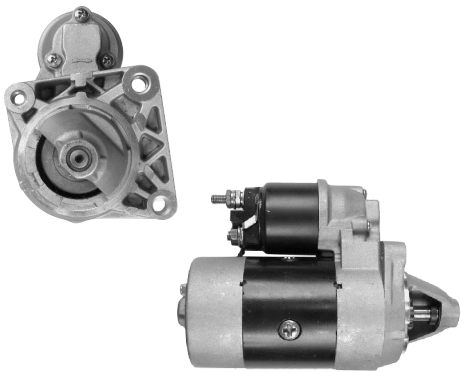

AS S4022

ORIGINAL
63101002

HC PARTS
CS796
3(1) 0.8 kW 12V
A:64 B:11
t9,10 (CW)

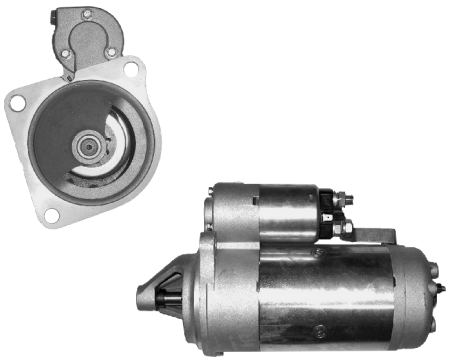

AS S4023

ORIGINAL
0001362060 MT67AA
63216725 MT67AC
MT67A MT67AC
MT67AB

HC PARTS
CS232
3(0) 4 kW 24V
A:110 B:27
t9 (CW)

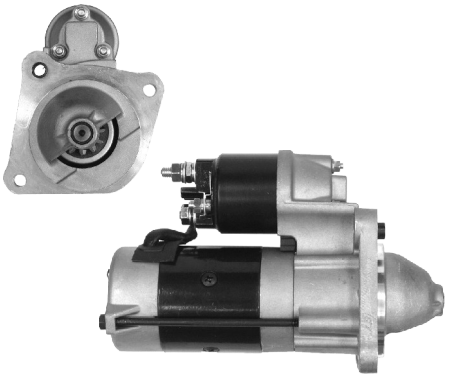

AS S4024

ORIGINAL
63113002
63114008

HC PARTS
CS1045
3(0) 2 kW 12V
A:82 B:9
t9, 11 (CW)

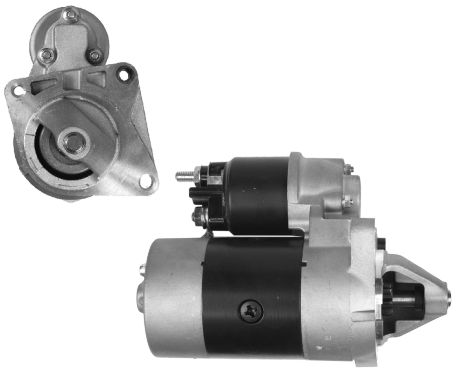

AS S4025

ORIGINAL
63102022

HC PARTS
CS1379
3(1) 0.9 kW 12V
A:64 B:10.5
t8, 9 (CW)

AS S4026

ORIGINAL
0001359021
MT62BA/A/AA/AC/AD

HC PARTS
CS240
3(0) 3 kW 12V
A:110 B:26
t9, 10 (CW)

AS S4027

ORIGINAL
63111008
63111018

HC PARTS
CS1191
3(3) 1.4 kW 12V
A:66 B:11
t9, 11 (CW)

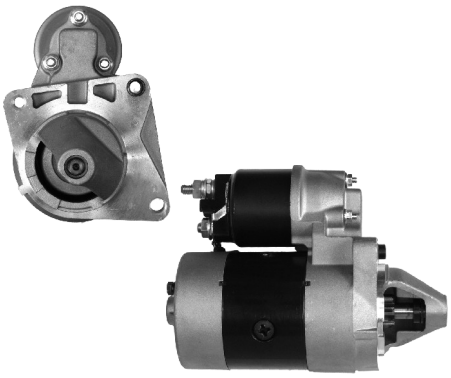

AS S4028

ORIGINAL
63101015
63101018

HC PARTS
CS1192
3(1) 0.8 kW 12V
A:64 B:11
t8 (CW)

STARTERS
MAGNETI MARELLI/LUCAS

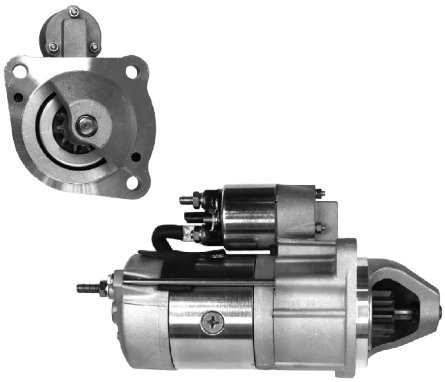

AS S4029

ORIGINAL	CARGO
63280040	113654
	3(0) 3 kW 12V
	A:88 B:32
	t10 (CW)

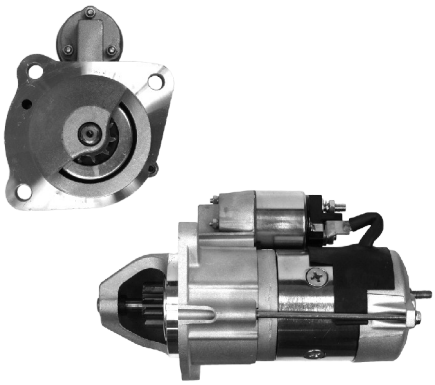

AS S4030

ORIGINAL	CARGO
63280041	113655
	3(0) 3 kW 12V
	A:88 B:32
	t10 (CW)

AS S4031

ORIGINAL	HC PARTS
63113001	CS1265
	3(2) 1.8 kW 12V
	A:76 B:21
	t11 (CW)

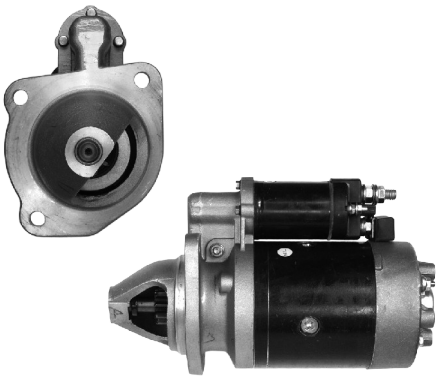

AS S4032

ORIGINAL	HC PARTS
943252204	CS103
MT68T	3(0) 2.7 kW 12V
	A:89 B:27
	t9 (CW)

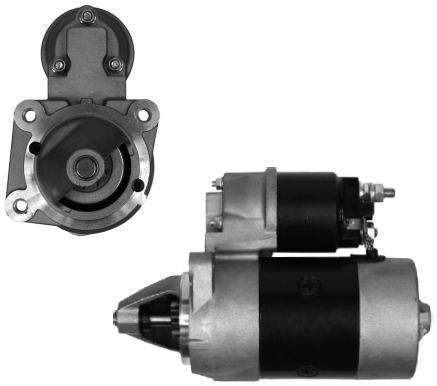

AS S4033

ORIGINAL		HC PARTS
63222836	63222908	CS1038
63222837	63220537	3(3) 0.8 kW 12V
63222897		A:62 B:12
63222905		t9 (CW)

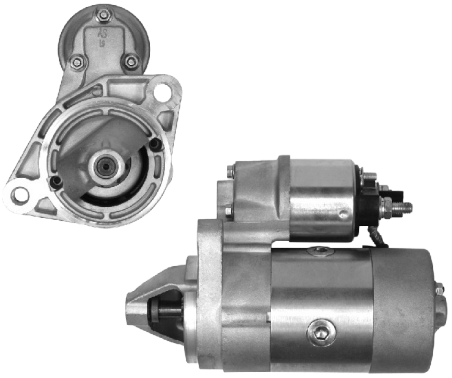

AS S4034

ORIGINAL	HC PARTS
63102000	JS1142
63192000	2(1) 0.9 kW 12V
63223106	A:70 B:11.5
943192000	t8 (CW)

AS S4035

ORIGINAL	HC PARTS
LRS01475	CS1171
63114017	2(2) 2.2 kW 12V
63222005	A:76 B:21
	t9 (CW)

AS S4036(MM)R

ORIGINAL	HC PARTS
MT71E	CS289
MT71T	3(0) 2 kW 12V
	A:110 B:27
R - rebuild	t9 (CW)

AS S4037(MM)R

ORIGINAL	HC PARTS
63217147	CS230
MT71D	3(0) 2.5 kW 12V
	A:110 B:27
R - rebuild	t9 (CW)

STARTERS
MAGNETI MARELLI/LUCAS

AS S4038

3(0) 3 kW 12V
A:110 B:26
t9 (CW)

AS S4039R

ORIGINAL	HC PARTS
63221800	CS371
63221830	3(2) 0.9 kW 12V
63221890	A:64 B:11
R - rebuild	t9, 10 (CW)

AS S5002

ORIGINAL	HC PARTS
M3T22582	JS349, JS350
M3T25782	2(2) 0.9 kW 12V
M3T25882	A:77 B:17
	t8 (CW)

AS S5003

ORIGINAL	HC PARTS
M2T65271	JS777
M2T65272	2(0) 3.2 kW 24V
M3T54072	A:82.5 B:22
	t9,11 (CW)

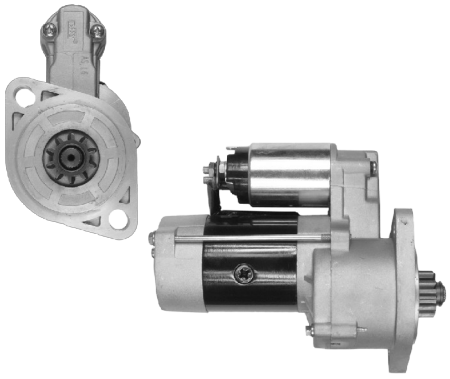

AS S5004

ORIGINAL	HC PARTS
M2T62271	JS1009
M8T70371	2(0) 2.2 kW 12V
M8T75171	A:82.5 B:24
	t10 (CW)

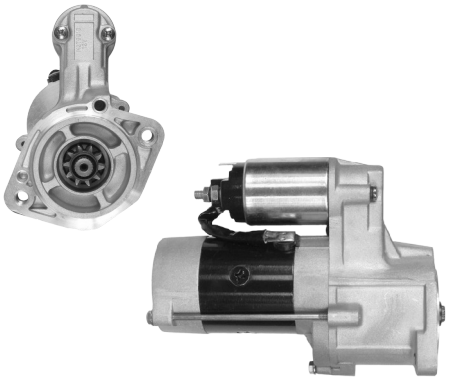

AS S5005

ORIGINAL	HC PARTS
M2T56171	JS344
M2T56181	2(2) 2.0 kW 12V
M2T56185	A:77 B:3.5
	t10,12,13 (CW)

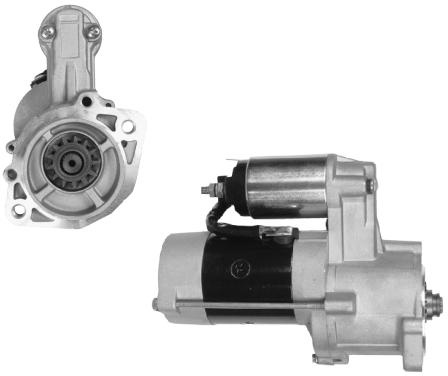

AS S5006

ORIGINAL	HC PARTS
M2T60171	JS769
M2T61071	2(2) 2.2 kW 12V
MD072654	A:77 B:3.5
	t13 (CW)

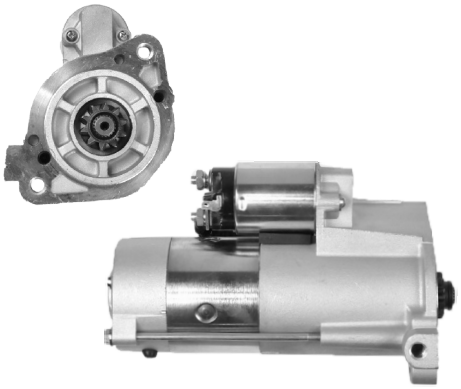

AS S5007

ORIGINAL	HC PARTS
M8T75071	JS1221
M8T75073	2(2) 2.2 kW 12V
	A:77 B:11
	t10 (CW)

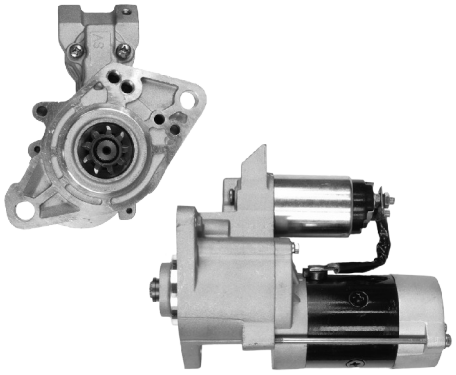

AS S5008

ORIGINAL	HC PARTS
M2T66871	JS553
M2T67871	3(1) 3.2 kW 24V
M2T67881	A:60 B:17
	t9 (CW)

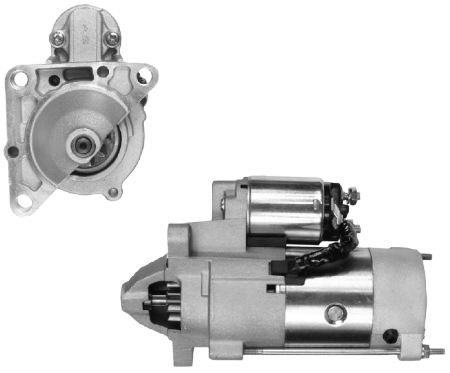

AS S5009

ORIGINAL	HC PARTS
M2T87671	CS1160
7700300522	3(0) 2.2 kW 12V
7700313447	A:72 B:0.5
	t9 (CW)

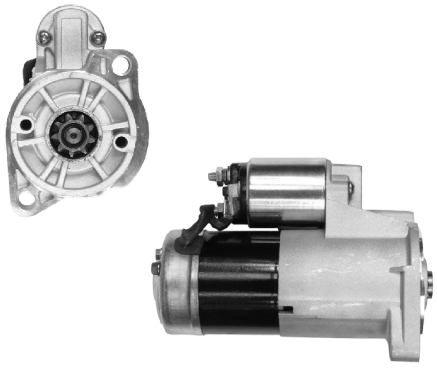

AS S5010

ORIGINAL	HC PARTS
M1T60381	JS779
	2(0) 1.2 kW 12V
	A:82,5 B:8
	t9 (CW)

STARTERS
MITSUBISHI

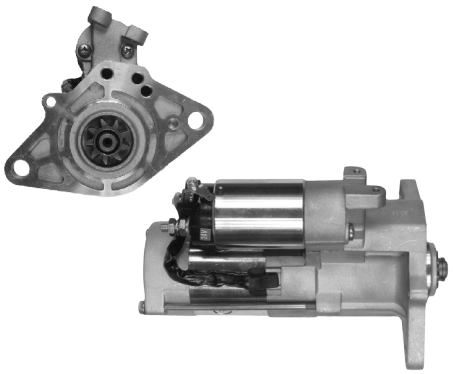

AS S5011

ORIGINAL
M8T80071

HC PARTS
JS1354
3(1) 3,2 kW 24V
A:60 B:17
t9 (CW)

AS S5012

ORIGINAL
M3T24482H M3T33281
M3T24482K M3T33583
M3T24486H M3T33586D
M3T30881 M3T33587

HC PARTS
JS640
3(2) 0.85 kW 12V
A:74 B:16
t8 (CW)

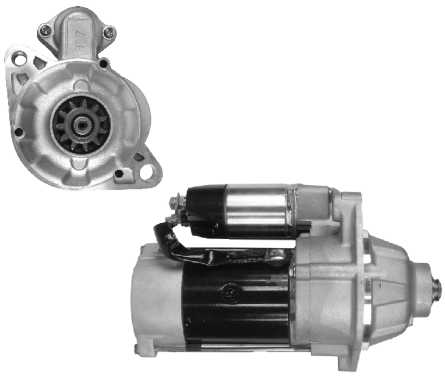

AS S5013

ORIGINAL
M3T56071

CARGO
113129
2(1) 4.5 kW 24V
A:110 B:63
t11 (CW)

AS S5014

ORIGINAL
M3T24481

HC PARTS
JS325
3(2) 0.9 kW 12V
A:74 B:15
t8 (CW)

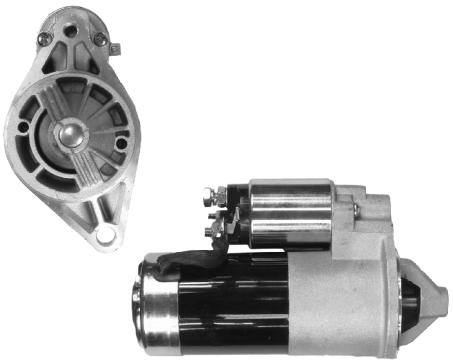

AS S5015

ORIGINAL
M1T74281
M1T74283
M1T74286

HC PARTS
JS1006
2(1) 1.2 kW 12V
A:82.5 B:6
t10 (CW)

AS S5016

ORIGINAL
M1T72481

HC PARTS
JS380
2(0) 0.7 kW 12V
A:66 B:5
t8,9 (CW)

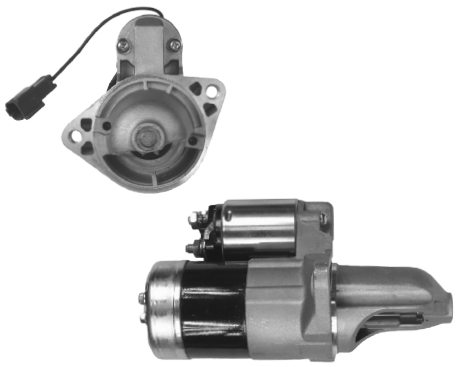

AS S5017

ORIGINAL
M1T72981

HC PARTS
JS627
2(2) 1.4 kW 12V
A:82 B:43
t8 (CW)

AS S5018

ORIGINAL
M3T43181

w/or w/o bendixhousing

HC PARTS
JS671
2(0) 1.0 kW 12V
A:65 B:49.5
t8,9 (ACW)

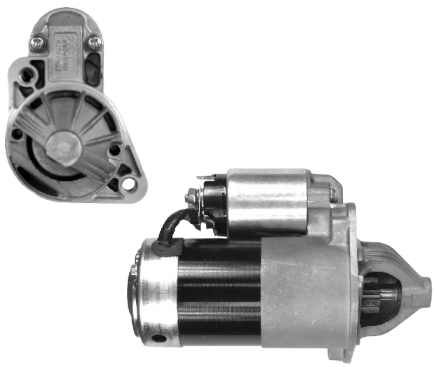

AS S5019

ORIGINAL
M1T71381

HC PARTS
JS658
2(2) 1.2 kW 12V
A:73 B:17
t8 (CW)

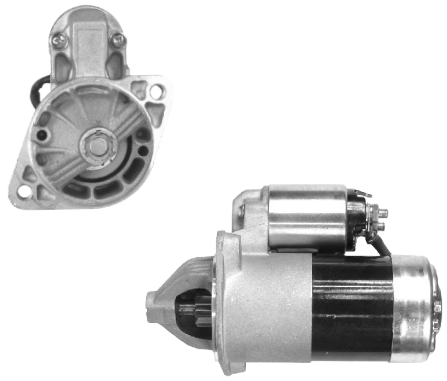

AS S5020

ORIGINAL	HC PARTS
M1T70481	JS628
	2(2) 1.2 kW 12V
	A:77 B:16.5
	t8 (CW)

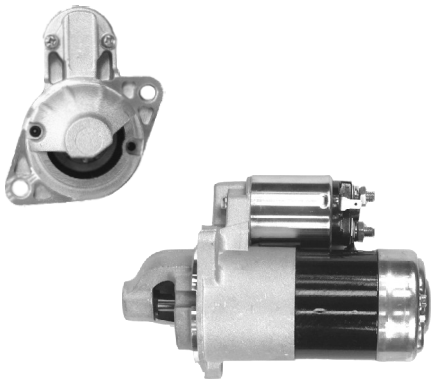

AS S5021

ORIGINAL	HC PARTS
M1T79681	JS915
M1T79781	2(0) 0.8 kW 12V
	A:77 B:18
w/or w/o bendixhousing	t10, 11 (CW)

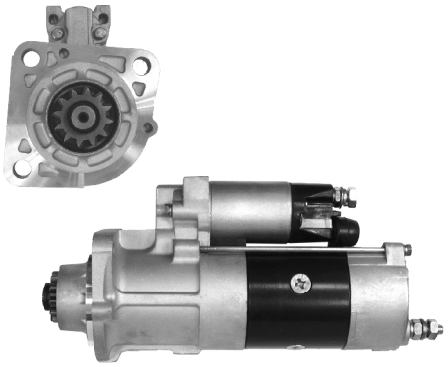

AS S5022

ORIGINAL	HC PARTS
M9T60371	CS1325
	3(0) 6 kW 24V
	A:89 B:40
	t12 (CW)

AS S5023

ORIGINAL	HC PARTS
M1T74081	JS670
028000-9800	2(0) 1.4 kW 12V
	A:83 B:33
w/or w/o bendixhousing	t9 (ACW)

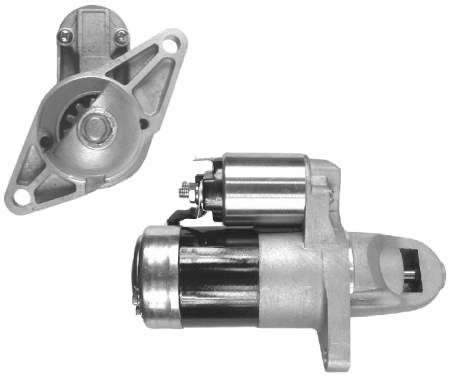

AS S5024

ORIGINAL	HC PARTS
M1T70781	JS752
	2(0) 2.0 kW 12V
	A:67 B:45
	t12 (ACW)

AS S5025

ORIGINAL	HC PARTS
M3T21882D	JS751
	2(0) 0.8 kW 12V
	A:82.5 B:8
	t8,9 (CW)

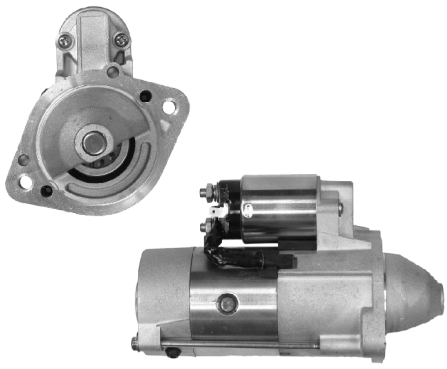

AS S5026

ORIGINAL	HC PARTS
M2T87171	JS1227, JS1351
M2T88071	2(2) 2.2 kW 12V
MD344185	A:77 B:9
MD315548	t10, 12 (CW)

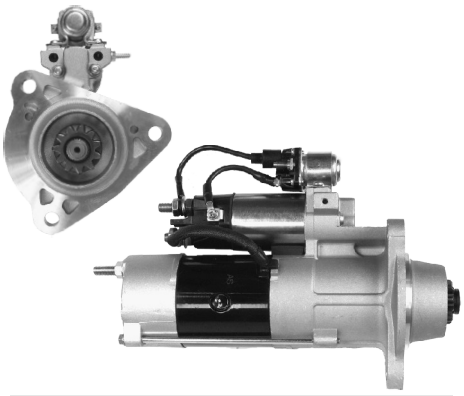

AS S5027

ORIGINAL	HC PARTS
M9T60471	CS1386
	3(0) 5.5 kW 24V
	A:92 B:47
	t11 (CW)

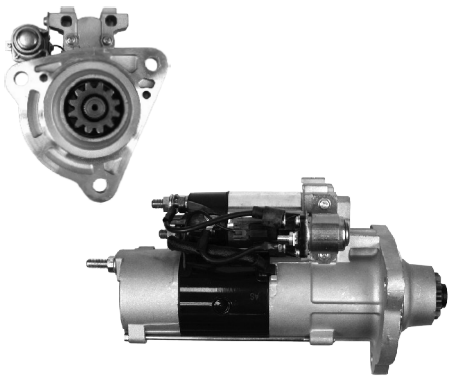

AS S5028

ORIGINAL	HC PARTS
M9T61171	CS1388
	3(0) 4.5 kW 24V
	A:92 B:47
	t12 (CW)

STARTERS
MITSUBISHI

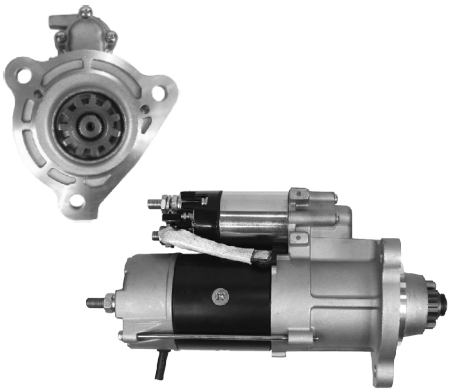

AS S5029

ORIGINAL
M9T80271

HC PARTS
CS1164
3(0) 7.2 kW 24V
A:92 B:51
t11 (CW)

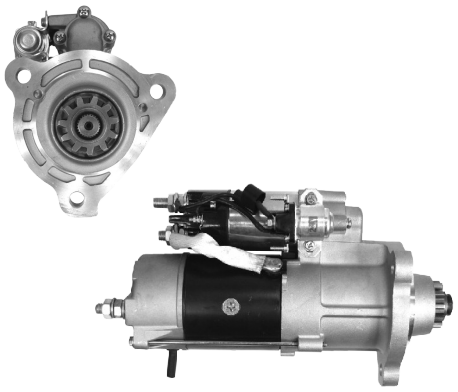

AS S5030

ORIGINAL
M9T80071

RENAULT
5001853716
3(0) 6 kW 24V
A:92 B:51
t11 (CW)

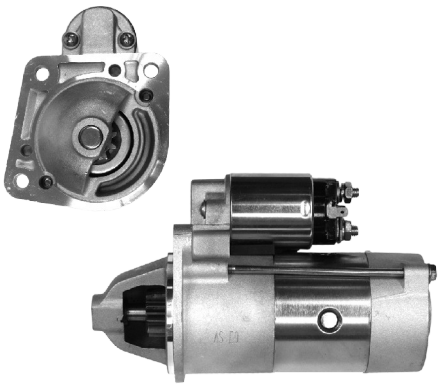

AS S5031

ORIGINAL
M2T88372
M2T88372ZC

LUCAS
LRS2166
3 2.2 kW 12V
A:82.5 B:18.5
t10 (CW)

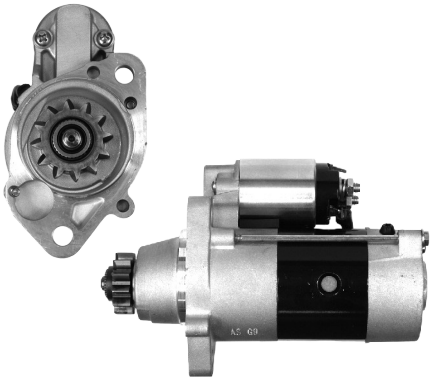

AS S5032

ORIGINAL
M8T71471

HC PARTS
JS1295
2(0) 1.7 kW 12V
A:70 B:54
t12 (ACW)

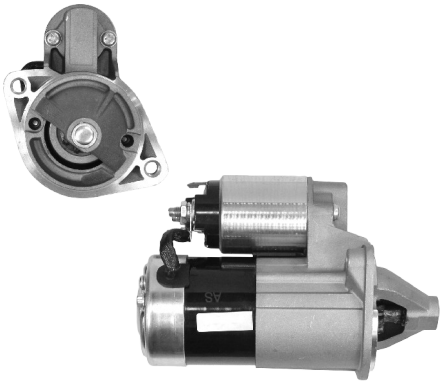

AS S5033

ORIGINAL
M0T30771
M0T81281
M0T81283

HC PARTS
JS1139
2(2) 1.2 kW 12V
A:77 B:10
t8 (CW)

AS S5034

ORIGINAL
M3T30881

HC PARTS
JS1000
3(2) 0.9 kW 12V
A:74 B:15
t8 (CW)

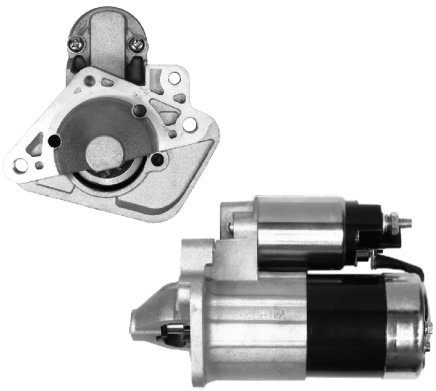

AS S5035

ORIGINAL
M0T21471
M0T87881

HC PARTS
CS1332
3(3) 1.4 kW 12V
A:63 B:
t12, 13 (CW)

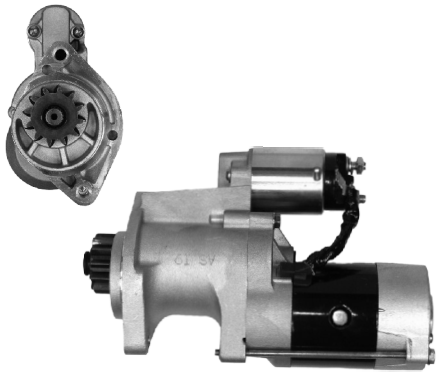

AS S5036

ORIGINAL
M2TS0571
M2TS0572

HC PARTS
CS1439
2(2) 2.2 kW 12V
A:70 B:31
t12 (CW)

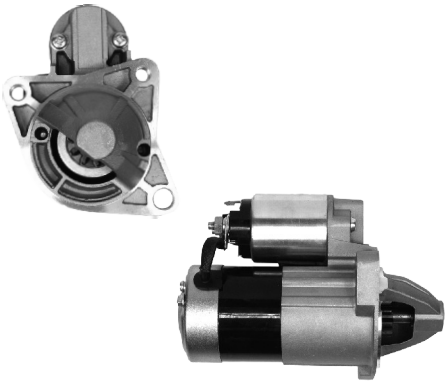

AS S5037

ORIGINAL
M0T80381

HC PARTS
JS1096
3(2) 1 kW 12V
A:74 B:13
t8, 10 (CW)

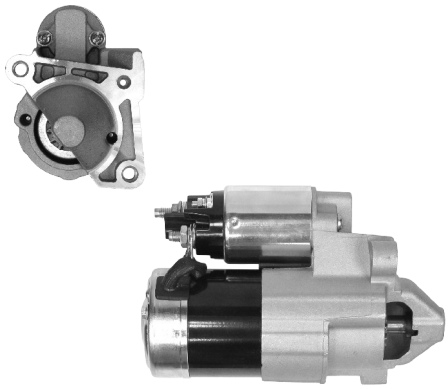

AS S5038

ORIGINAL
M0T86181
M0T91581

HC PARTS
CS1273
3(2) 1.1 kW 12V
A:65 B:-2
t12 (CW)

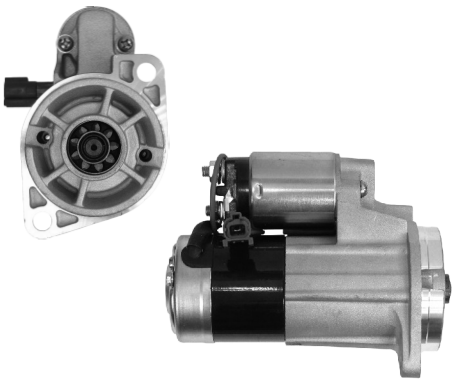

AS S5039

ORIGINAL
M0T65381

2 1 kW 12V
A: B:
t9 (CW)

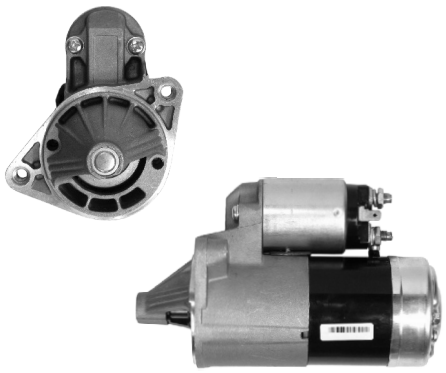

AS S5040

ORIGINAL
M0T86481
M1T70281
M1T70283
M1T75283

HC PARTS
JS1092
2(2) 1.2 kW 12V
A:75 B:6
t8 (CW)

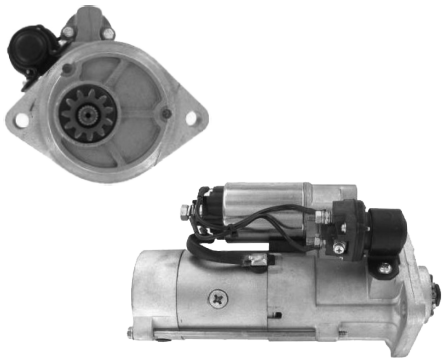

AS S5041

ORIGINAL
M8T87171
ME049303

2 4.2 kW 24V
t11 (CW)

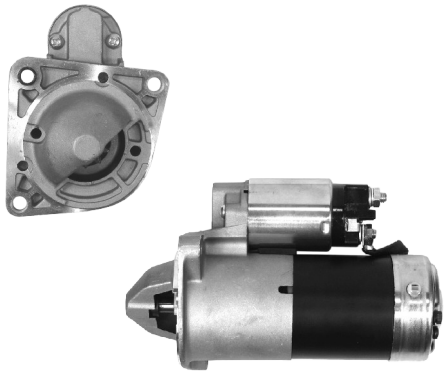

AS S5042

ORIGINAL
M1T30171
M1T30172

HC PARTS
CS1428
3(0) 1.9 kW 12V
A:82 B:2
t10 (CW)

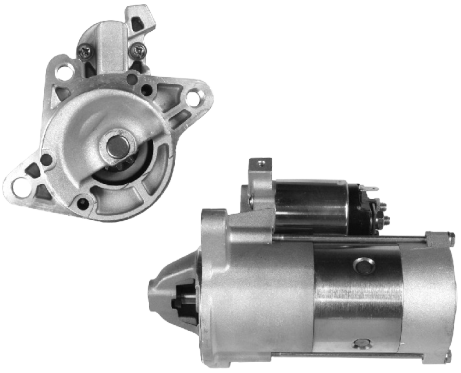

AS S5043

ORIGINAL
M2T87471

HC PARTS
JS1238
3(2) 2.2 kW 12V
A:88 B:5
t10 (CW)

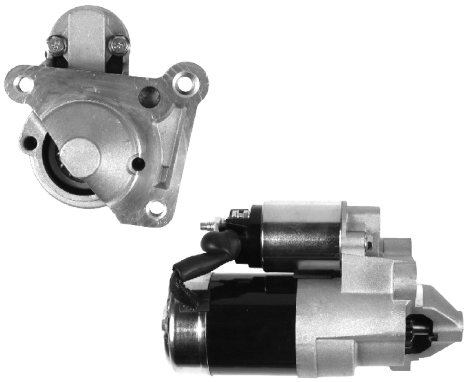

AS S5044

ORIGINAL
M1T85781

HC PARTS
CS1252
3(3) 1.4 kW 12V
A:65 B:0
t12 (CW)

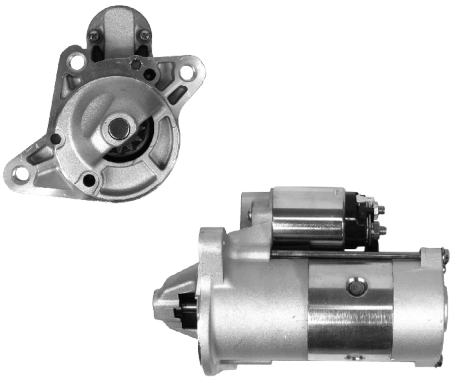

AS S5045

ORIGINAL
M2T88671

HC PARTS
JS1296
3(3) 2.3 kW 12V
A:88 B:5
t12 (CW)

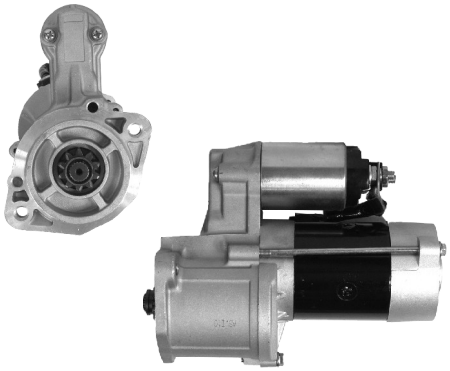

AS S5046

ORIGINAL
M2T74171
MD140190
MD164976

HC PARTS
JS770
2(2) 2 kW 12V
A:77 B:9
t10 (CW)

STARTERS
MITSUBISHI

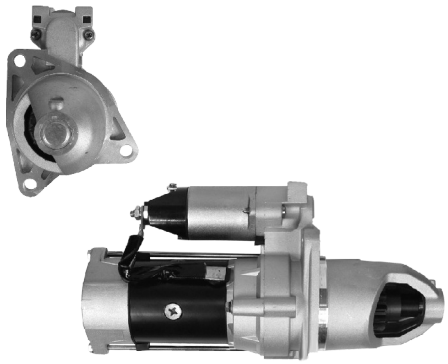

AS S5047

ORIGINAL
M3T95071
M3T95072
M3T95073
M3T95081

3(0) 6.0 kW 24V
A:100 B:68
t13 (CW)

AS S5048

ORIGINAL
M2T78071
M2T78072
M2T78072B

3 4.5 kW 24V
t12 (CW)

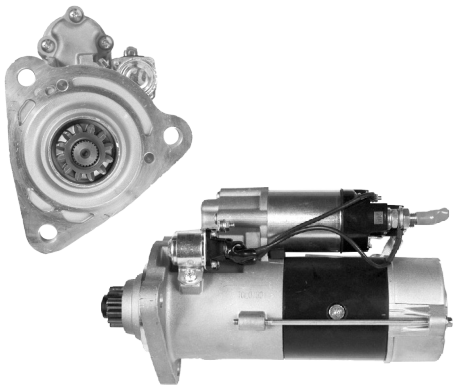

AS S5049

ORIGINAL
M9T80472
M9T80473

HC PARTS
CS1463
3(0) 6.2 kW 24V
A:92 B:47
t12 (CW)

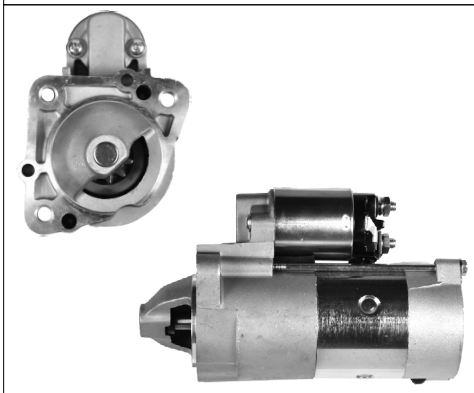

AS S5050

ORIGINAL
M2T85271

HC PARTS
CS1444
3(3) 2 kW 12V
A:66 B:3
t10 (CW)

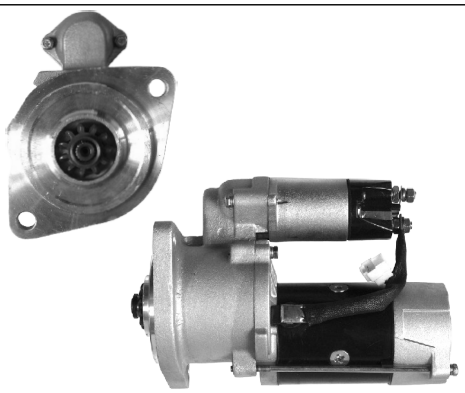

AS S5051

ORIGINAL
M2T78381
M2T78382
ME087589
ME087590

CARGO
113560
2(0) 5 kW 24V
A:100 B:22
t11 (CW)

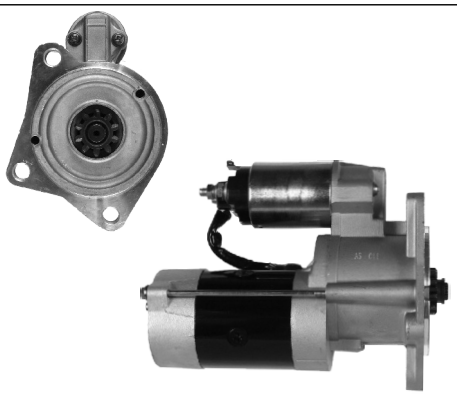

AS S5052

ORIGINAL
M2T64371
M2T64372
M2T64373

CARGO
113210
3(0) 3.2 kW 24V
A:105 B:11
t10 (CW)

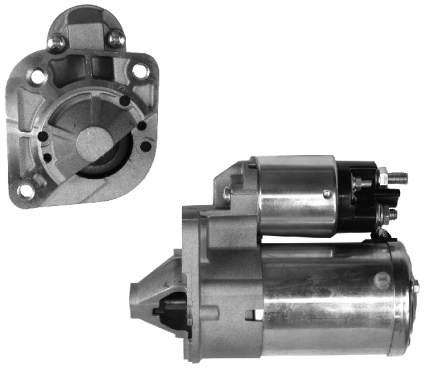

AS S5053

ORIGINAL
M0T45171
M0T45171ZT

HC PARTS
CS1442
3(3) 0.8 kW 12V
A:66 B:-1
t8 (CW)

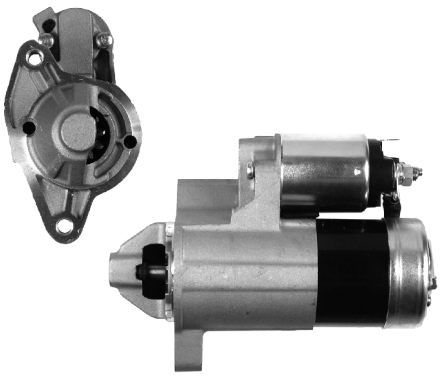

AS S5054

ORIGINAL
M0T91981
M0T91981ZC

CARGO
113820
2(2) 1.2 kW 12V
t10 (CW)

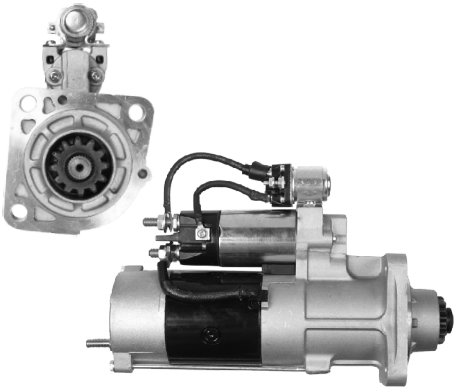

AS S5055

ORIGINAL
M9T60671
M9T60672

HC PARTS
CS1348
3(0) 6 kW 24V
A:89 B:40
t12 (CW)

AS S5056

ORIGINAL
M2T85671
M2T85672

HC PARTS
CS1427
2(0) 2 kW 12V
A:75 B:33
t9 (CW)

STARTERS
NIPPONDENSO

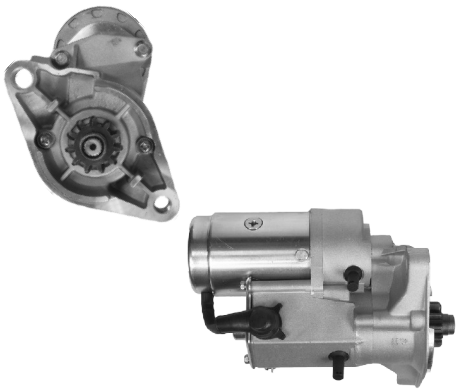

AS S6001

ORIGINAL	HC PARTS
028000-7370	JS642
028000-7372	2(1) 2.0 kW 12V
128000-0360	A:82.5 B:15.5
	t11 (CW)

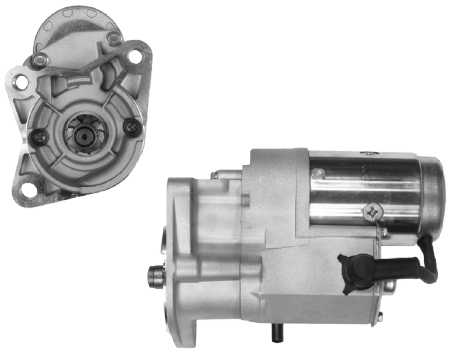

AS S6002

ORIGINAL	HC PARTS
128000-0040	JS365
228000-3840	3(2) 2.0 kW 12V
228000-3841	A:88 B:7
w/or w/o bendixhousing	t9,10 (CW)

AS S6003

ORIGINAL	HC PARTS
028000-5880	JS1012
	3(0) 2.5 kW 12V
	A:89 B:47
	t13 (CW)

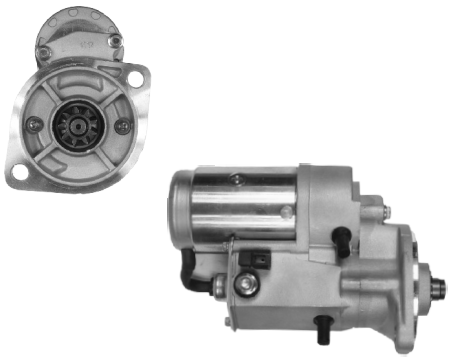

AS S6004

ORIGINAL	HC PARTS
028000-7000	JS552
028000-7790	2(0) 2.0 kW 12V
128000-4660	A:95 B:20
	t9,10 (CW)

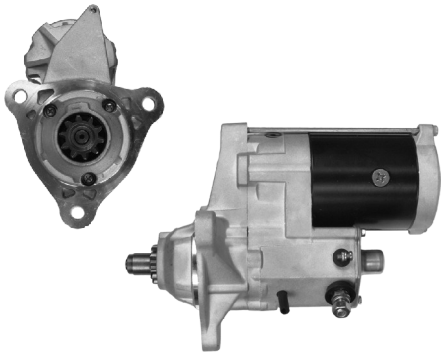

AS S6005

ORIGINAL	HC PARTS
228000-7550	CS1292
99486046	3(0) 5.0 kW 24V
	A:92 B:49
	t10 (CW)

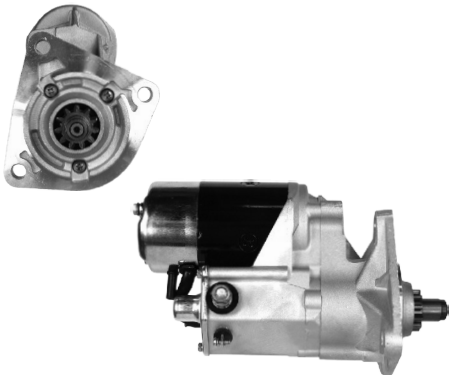

AS S6006

ORIGINAL	
028000-9140	
	3(0) 4.5 kW 24V
	A:100 B:27
	t11 (CW)

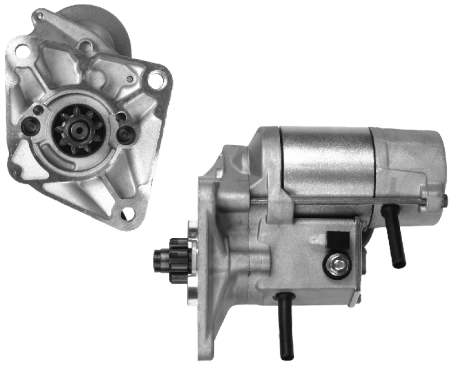

AS S6007

ORIGINAL	HC PARTS
228000-7220	CS1242
	3(0) 2.2 kW 12V
	A:66 B:21
	t9 (CW)

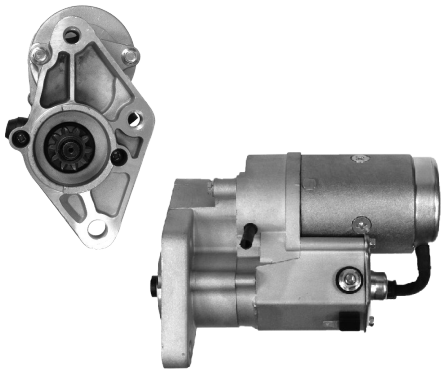

AS S6008

LUCAS	HC PARTS
LRS1623	JS1298
	3(2) 2.2 kW 12V
CARGO	A:64 B:4
113327	t10 (CW)

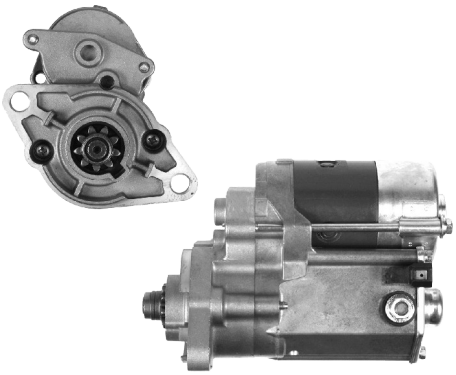

AS S6009

ORIGINAL	HC PARTS
028000-7560	JS316
28100-34060	2(0) 1 kW 12V
	A:74 B:21
	t9 (CW)

STARTERS
NIPPONDENSO

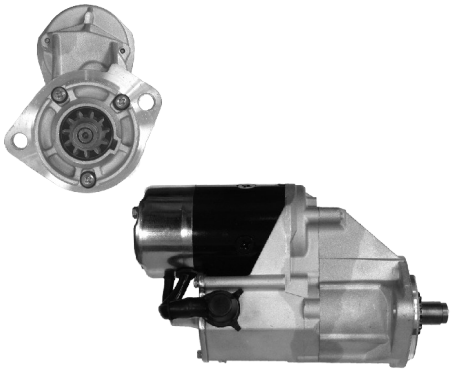

AS S6010

ORIGINAL
028000-5860
028000-5861
028000-5862

HC PARTS
JS733
2(0) 4.5 kW 24V
A:90 B:15.5
t11 (CW)

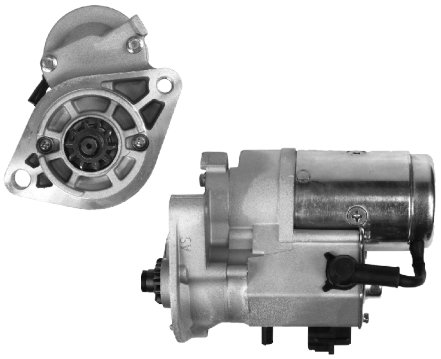

AS S6011

ORIGINAL
228000-5020
228000-5021
228000-5022
228000-5023

HC PARTS
JS1154
2(1) 2.2 kW 12V
A:82.5 B:18
t10 (CW)

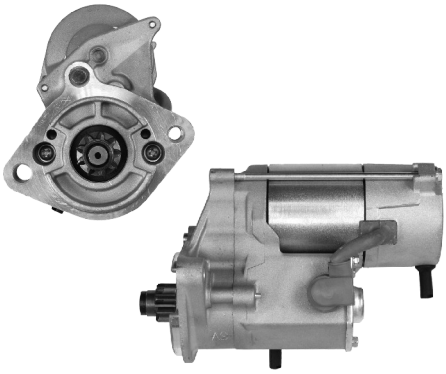

AS S6012

ORIGINAL
228000-7800

HC PARTS
JS1321
2(1) 2 kW 12V
A:76 B:21
t9 (CW)

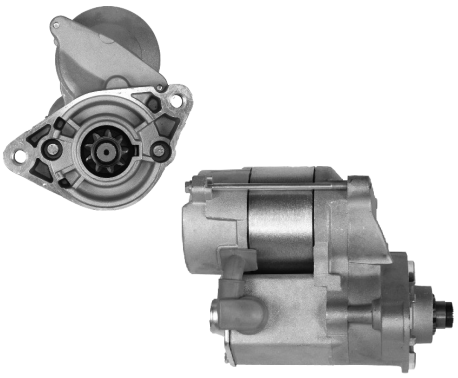

AS S6013

ORIGINAL
028000-9260

HC PARTS
JS385
2(2) 1 kW 12V
A:74 B:18
t9 (CW)

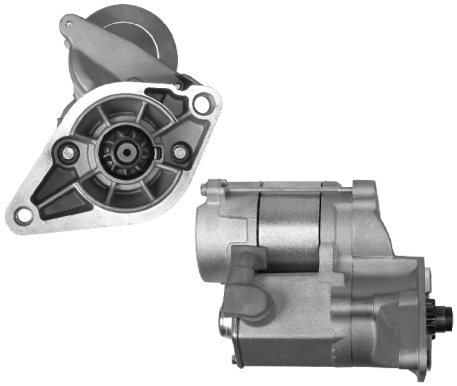

AS S6014

ORIGINAL
228000-0900

HC PARTS
JS1018
2(1) 1.2 kW 12V
A:74 B:7.5
t9 (CW)

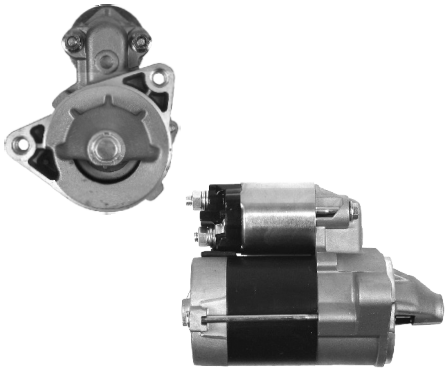

AS S6016

CARGO
111849

HC PARTS
CS1210
2(2) 1 kW 12V
A:75 B:7
t8 (CW)

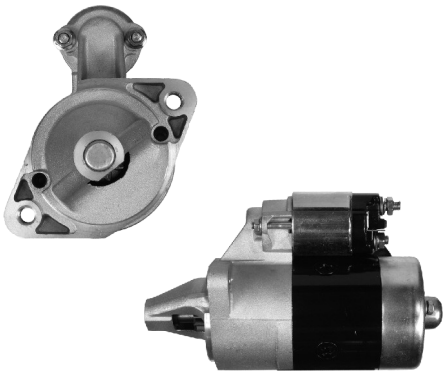

AS S6017

ORIGINAL
36100-11110

HC PARTS
JS396
2(2) 0.7 kW 12V
A:77 B:18
t8 (CW)

AS S6018

ORIGINAL
028000-9940
128000-1930
128000-1950
128000-4060

HC PARTS
JS630
2(0) 0.6 kW 12V
A:82.5 B:33.5
t8 (ACW)

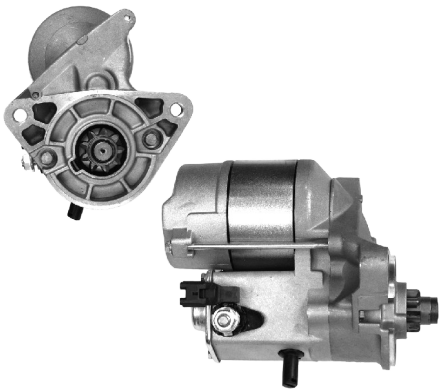

AS S6019

ORIGINAL
128000-7680
228000-2610

HC PARTS
JS1015
2(2) 1 kW 12V
A:74 B:20
t9 (CW)

STARTERS
NIPPONDENSO

AS S6020

ORIGINAL	HC PARTS
128000-2680	JS760
128000-2682	2(1) 0.8 kW 12V
128000-4480	A:74 B:8
	t8, 9 (CW)

AS S6021

ORIGINAL	HC PARTS
228000-5340	JS1155
228000-5341	2(1) 2.7 kW 12V
228000-5342	A:82.5 B:18
	t11 (CW)

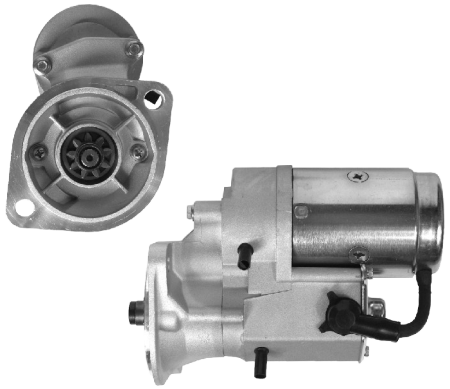

AS S6022

ORIGINAL	HC PARTS
028000-5710	JS639
128000-0830	2(0) 2 kW 12V
	A:95 B:11
	t9 (CW)

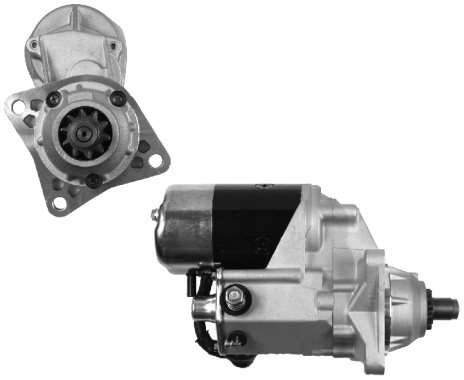

AS S6023

ORIGINAL	HC PARTS
228000-5640	CS1383
228000-5641	3(0) 4.5 kW 24V
	A:89 B:48.5
	t10 (CW)

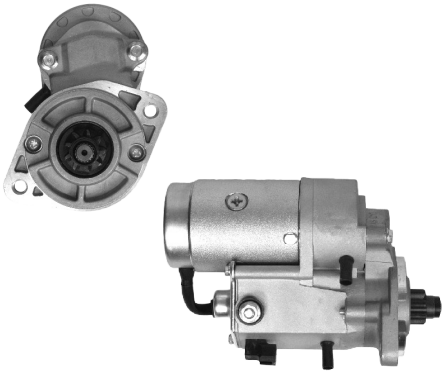

AS S6024

ORIGINAL	HC PARTS
36100-27000	JS1234
36100-27010	2(2) 2.0 kW 12V
	A:82.5 B:24
	t9 (CW)

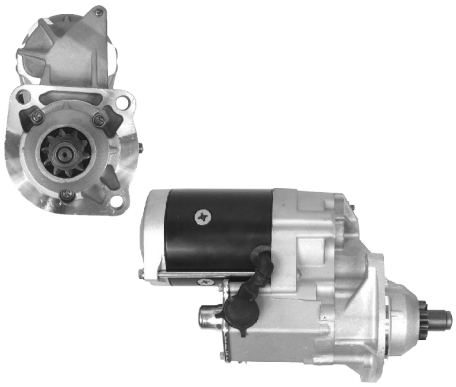

AS S6025

ORIGINAL	HC PARTS
128000-5730	JS930
128000-5731	3(0) 5.5 kW 24V
128000-5732	A:89 B:47.5
	t10 (CW)

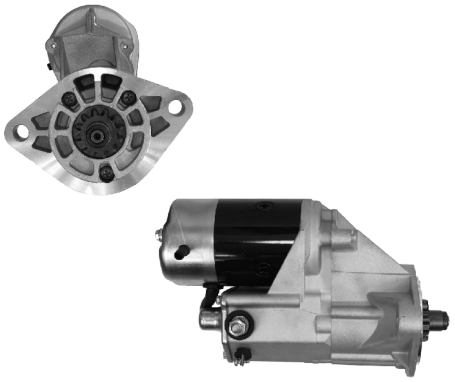

AS S6026

ORIGINAL	HC PARTS
128000-8620	JS1021
128000-8621	2(0) 4.5 kW 24V
228000-1600	A:91 B:16.5
228000-1601	t12 (CW)

AS S6027

ORIGINAL	HC PARTS
028000-6200	JS746
	3(0) 4.5 kW 24V
	A:105 B:40
	t11 (CW)

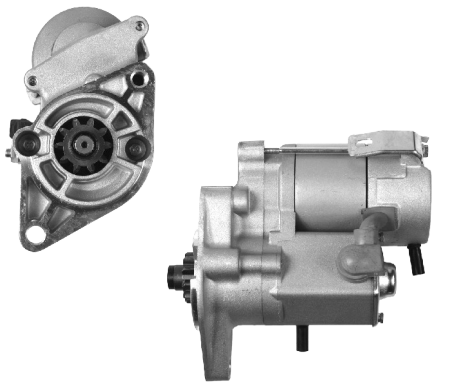

AS S6028

ORIGINAL	HC PARTS
428000-0570	JS1357
	2(1) 1.4 kW 12V
	A:74 B:14
	t10 (CW)

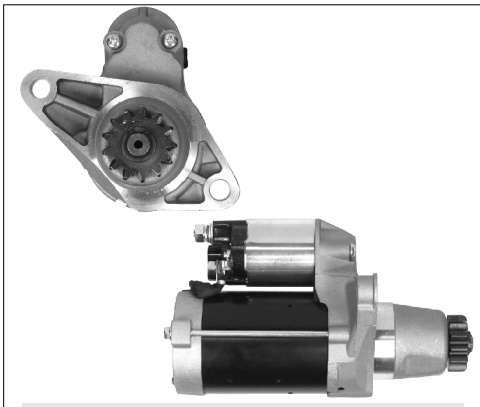

AS S6029

ORIGINAL
228000-9901
228000-9902

HC PARTS
JS1363
2(0) 1.6 kW 12V
A:55 B:66
t13 (ACW)

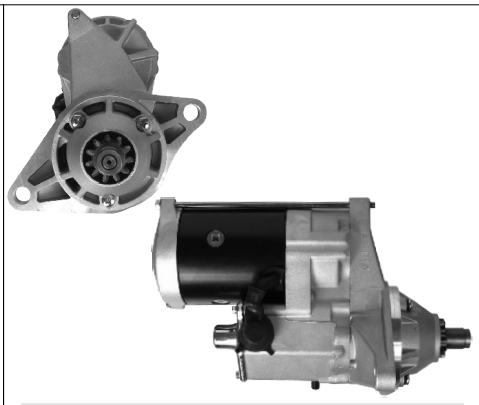

AS S6030

ORIGINAL
128000-425

2(0) 5.5 kW 24V
A:115 B:65
t11 (CW)

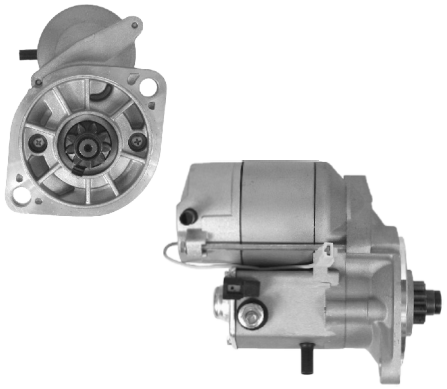

AS S6031

ORIGINAL
228000-1120
228000-1121
228000-1122

2(0) 2 kW 12V
A:95 B:20
t9 (CW)

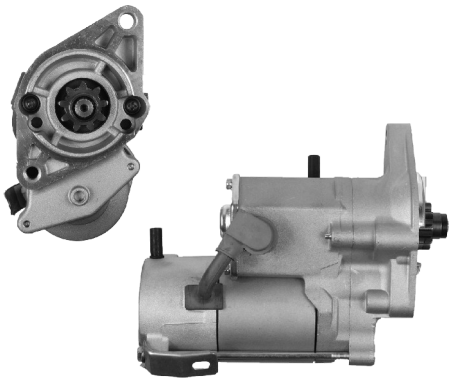

AS S6032

ORIGINAL
428000-0500
428000-1280
428000-2730
428000-7820

HC PARTS
JS1358
2(1) 2.0 kW 12V
A:74 B:14
t9 (CW)

STARTERS
OTHER

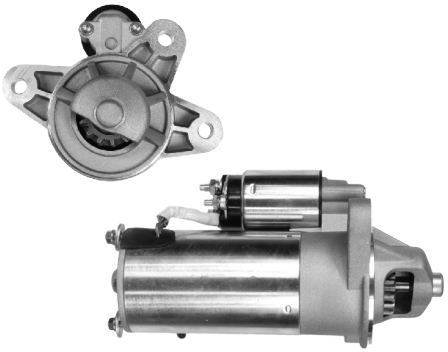

AS S9001

ORIGINAL
112161
97VB-11000-AA
97VB-11000-AB
98VB-11000-B1A
98VB-11000-B3A

HC PARTS
CS977
3(0) 2.3 kW 12V
A:92 B:20
t13 (CW)

AS S9002

ORIGINAL
1S7U11000BA
1S7U11000BB

In offer also:
S9002R(rebuild)

HC PARTS
CS1245
2(0) 2.1 kW 12V
A: B:36
t19 (CW)

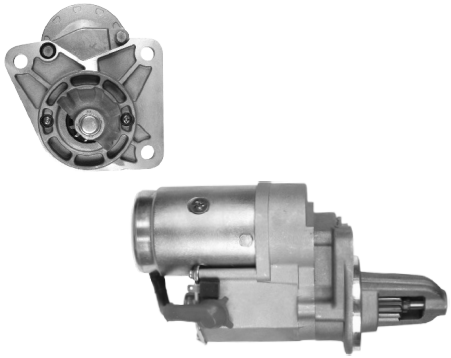

AS S9003

ORIGINAL
OK60118400
MG122423
MG122565

3(0) 2.2 kW 12V
A:88 B:43
t11 (ACW)

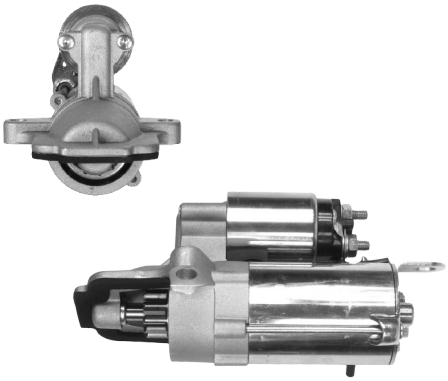

AS S9004

ORIGINAL
1S7U11000AB
1S7U11000AC

HC PARTS
CS1246
2(0) 1.5 kW 12V
A: B:28.5
t11 (CW)

AS S9005

ORIGINAL
0-23000-6510

HC PARTS
JS740
3(0) 7.5 kW 24V
A:100 B:52
t13 (CW)

AS S9006

ORIGINAL
0-23000-1170
0-23000-6531
0-23000-6532

CARGO
111020
3(0) 7.5 kW 24V
A:92 B:47
t12 (CW)

AS S9007

ORIGINAL
0-21000-3330
1-81100022-1
1-81100022-4

3(0) 6 kW 24V
t12 (CW)

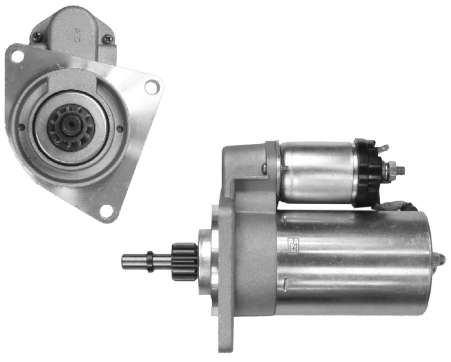

AS S9008

ORIGINAL
0001108099

HC PARTS
CS332
3(0) 1.3 kW 12V
A:82.5 B:32
t11 (ACW)

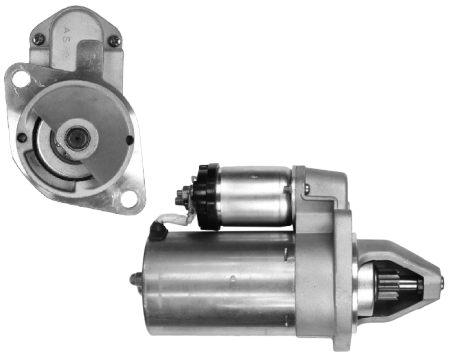

AS S9009

ORIGINAL
2110-3708010

HC PARTS
CS1182
2(0) 1.4 kW 12V
A:76 B:35
t9 (ACW)

AS S9010

VOLKSWAGEN
6U0911023B
PAL MAGNETON
443115141310

HC PARTS
CS798
2(0) 1.0 kW 12V
A:76.3 B:27
t9 (ACW)

AS S9011

VOLKSWAGEN
047911023C
PAL MAGNETON
443115141331
443115141338

HC PARTS
CS1204
3(1) 1.0 kW 12V
A:50 B:21
t9 (ACW)

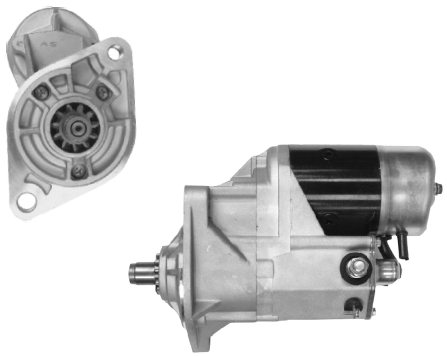

AS S9012

ORIGINAL
028000-9760

CARGO
113130
2(1) 4.5 kW 24V
A:105 B:28
t11 (CW)

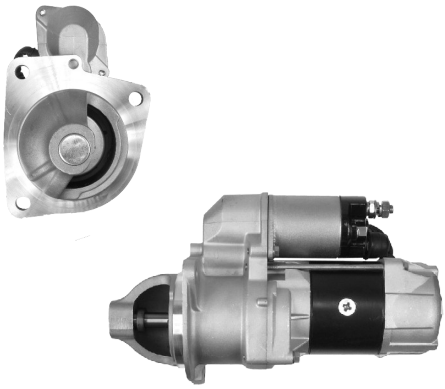

AS S9013

ORIGINAL
EH700

3(0)
A:100 B:27
t11 (CW)

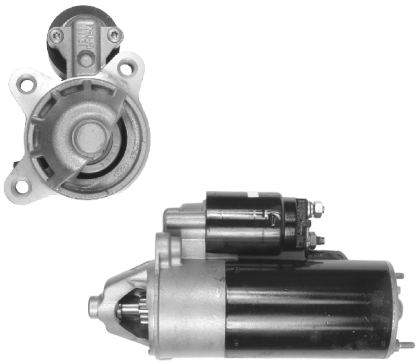

AS S9014

ORIGINAL
0001218128
97BB-11000-BB

HC PARTS
CS613
3(3) 2.2 kW 12V
A:76.0 B:15.0
t10 (CW)

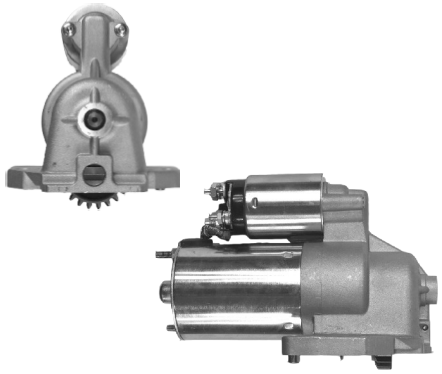

AS S9015

ORIGINAL
93BB11000KB

HC PARTS
CS961
2(0) 1.4 kW 12V
A: B:22
t22 (ACW)

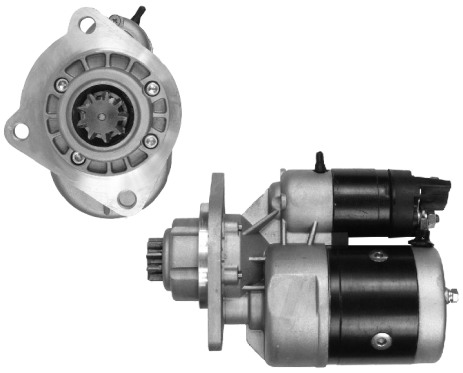

AS S9016

LUBLIN II

Repl. MAGNETON
443115144723
3(0) 3 kW 12V
A:89 B:49
t9 (CW)

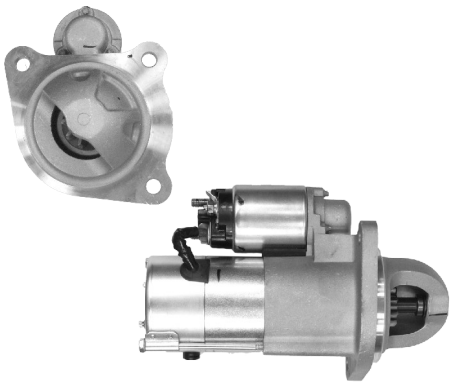

AS S9017

Repl. DELCO
PG260NA
LUBLIN III

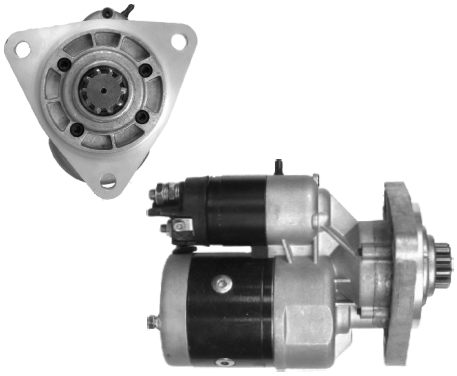

AS S9018

CARGO
112488

MAGNETON
9142780

Repl. BIELORUS
24073708000
3(0) 3 kW 12V
A:100 B:31
t10 (CW)

STARTERS
OTHER

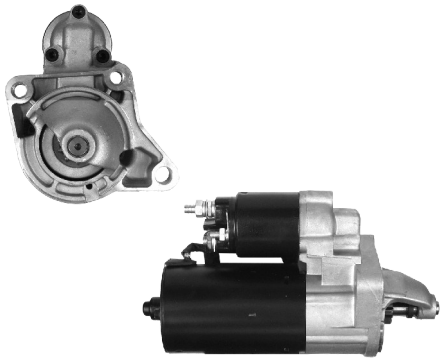

AS S9019

ORIGINAL
93BB-11000-AA
93BB-11000-AB
93BB-11000-HB
96BB-11000-AA

HC PARTS
CS719
3(2) 1.4 kW 12V
A:76 B:14
t10 (CW)

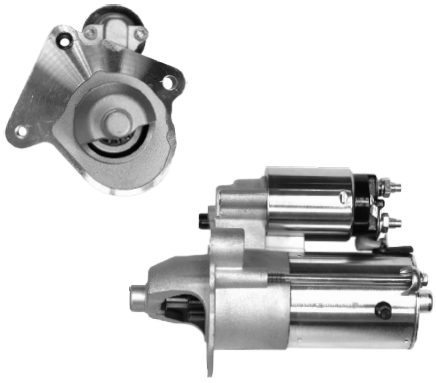

AS S9020

FORD
1140757
2S6U-11000-EB
2S6U-11000-EC
2S6U-11000-ED

HC PARTS
CS1275
3(2) 1.4 kW 12V
A: B:13.5
t12 (CW)

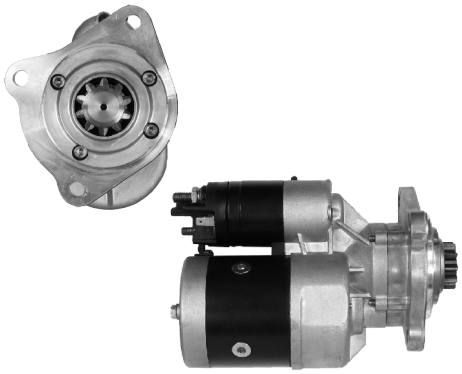

AS S9021

MAGNETON
9142743

3(0) 3 kW 12V
A:89 B:30
t10 (CW)

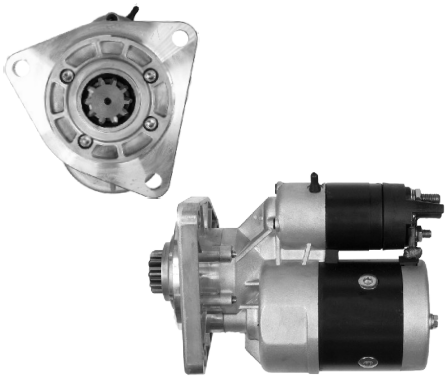

AS S9022

JUMZ
123708002

3(0) 3 kW 12V
A:100 B:31
t10 (CW)

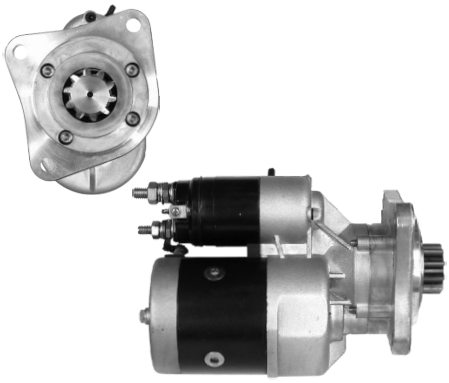

AS S9023

MAGNETON
443115142702

CARGO
113269
3(0) 3 kW 12V
A:89 B:30
t10 (CW)

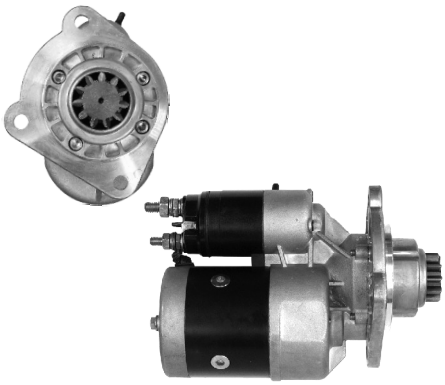

AS S9024

MAGNETON
443115142722

HC PARTS
CS604, CS944
3(0) 3 kW 12V
A:89 B:48
t11(CW)

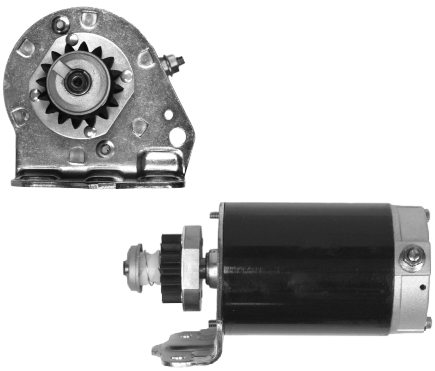

AS S9025

CARGO
110634

HC PARTS
US851
2(0) 0.65 kW 12V

t16 (ACW)

AS S9026

CARGO
112242

2(0) 0.6 kW 12V

t16 (ACW)

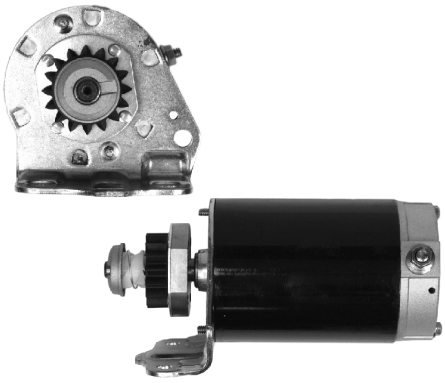

AS S9027

CARGO
112563

2(0) 0.8 kW 12V

t16 (ACW)

AS S9028

CARGO
110635

HC PARTS
US852
2(0) 0.5 kW 12V

t16 (ACW)

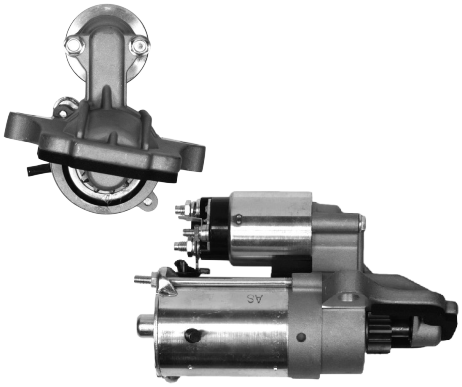

AS S9029

FORD
1325943

HC PARTS
CS1402
2(0) 1.2 kW 12V
B:29
t11 (CW)

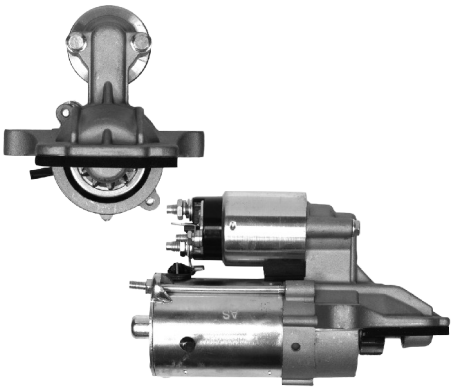

AS S9030

ORIGINAL
1251700

HC PARTS
CS1403
2(0) 1.2 kW 12V
B:29
t11 (CW)

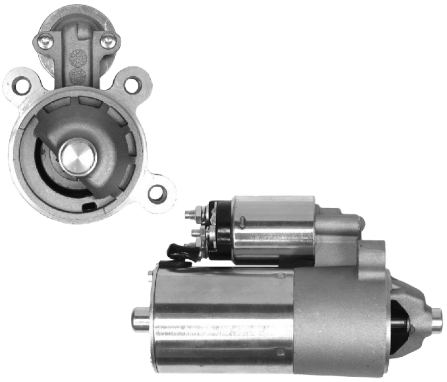

AS S9031

FORD
93BB-11000-BA
93BB-11000-BAA
93BB-11000-JB
93BB-11000-JC

HC PARTS
CS1058
3(3) 1.5 kW 12V
A:76 B:3
t10 (CW)

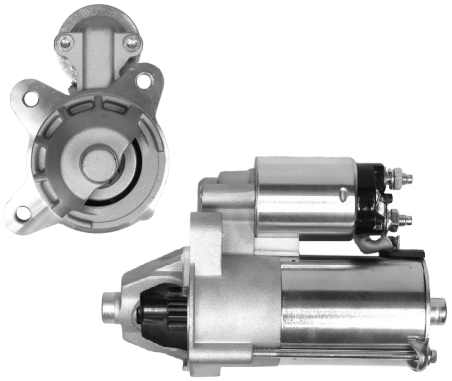

AS S9032

FORD
1345314
2T14-11000-BA
2T14-11000-BB
2T14-11000-BC

HC PARTS
CS1336
3(3) 1.4 kW 12V
A:76 B:15
t10 (CW)

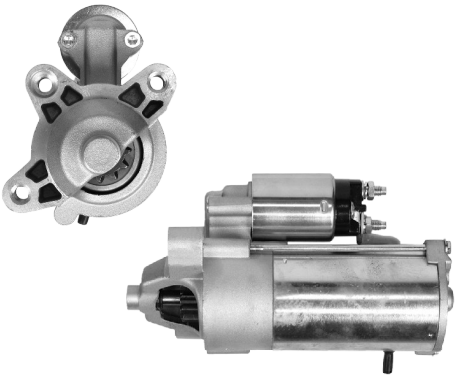

AS S9033

FORD
1231963
1351969
1376305
1385784

HC PARTS
CS1377
3(3) 2.2 kW 12V
A:63 B:-5.5
t11(CW)

AS S9034

NIKKO
0-23000-1290
KOMATSU
600-813-3320

HC PARTS
JS750
2(0) 5.5 kW 24V
A:105 B:13.5
t11 (CW)

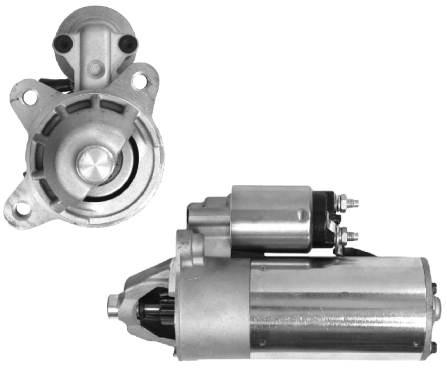

AS S9035

FORD
1133994
1S4U-11000-AA
97BB-11000-B3D
98AB-11000-AD

HC PARTS
CS1396
3(3) 2.2 kW 12V
A:76 B:14.5
t10 (CW)

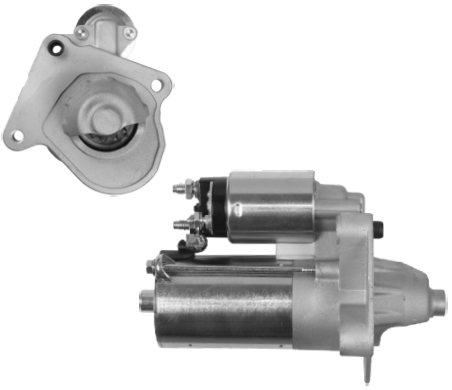

AS S9036

ORIGINAL
3M5T-11000-CD
3M5T-11000-CE
3M5T-11000-CF
1229427

HC PARTS
CS1341
3(2) 1.2 kW 12V
A:63.5 B:13.5
t11 (CW)

STARTERS
OTHER

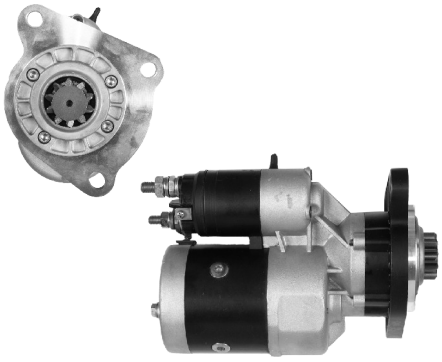

AS S9037

MAGNETON
9142764

3(0) 2.7 kW 12V
A:92 B:25
t10 (CW)

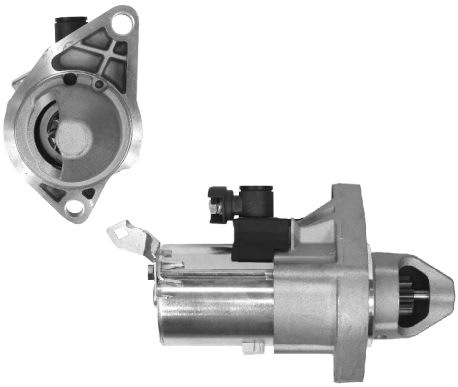

AS S9038

HONDA
31200-RNA-A51

2(0) 1.2 kW 12V

MITSUBA
SM710-01

t9 (CW)

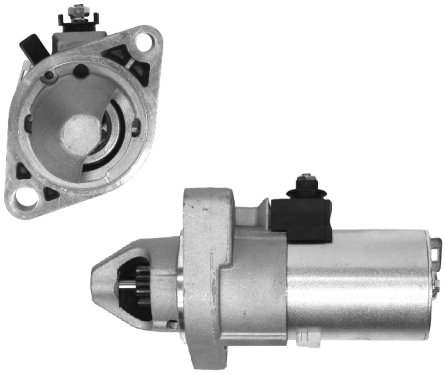

AS S9039

HONDA
31200-RAA-A51

CARGO
113821
2(0) 1.6 kW 12V

MITSUBA
SM612-09

t9 (CW)

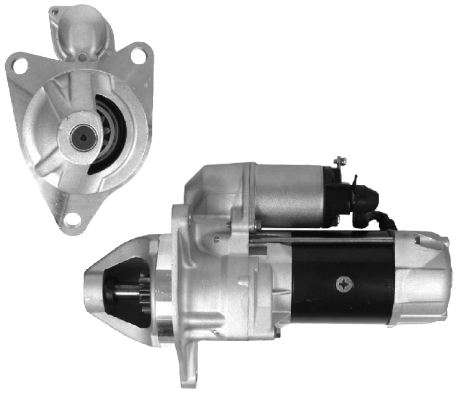

AS S9040

SAWAFUJI
0350-602-0118

3(0) 6 kW 24V
A:121.5 B:42
t11 (CW)

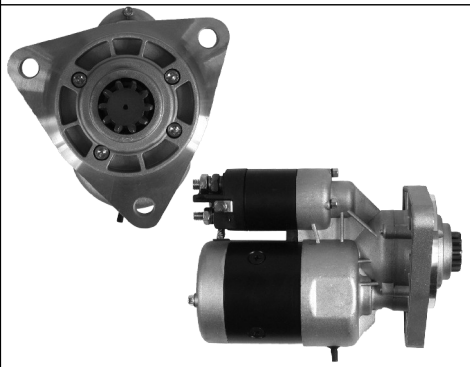

AS S9041

MAGNETON
9172780

CARGO
113356
3(0) 3.5 kW 24V
A:100 B:31
t10 (CW)

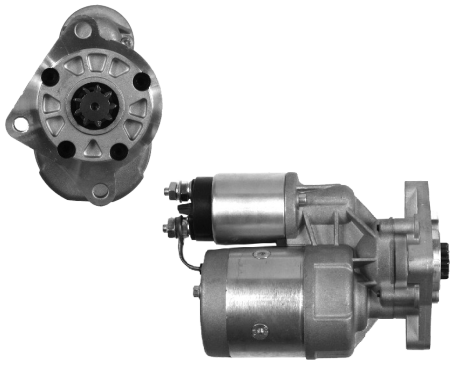

AS S9042

MAGNETON
9141322

3(0) 1 kW 12V
A:67 B:12
t9 (CW)

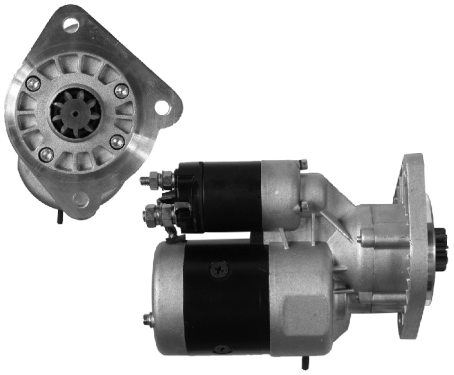

AS S9043

MAGNETON
9142801

HC PARTS
CS1173
3(0) 2.7 kW 12V
A:89 B:21
t9 (CW)

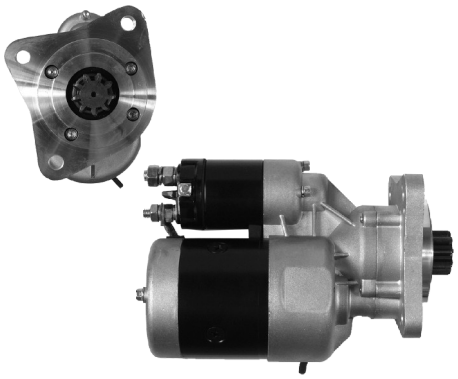

AS S9044

MAGNETON
9142802

HC PARTS
CS103, CS114
3(0) 2.7 kW 12V
A:89 B:26
t9 (CW)

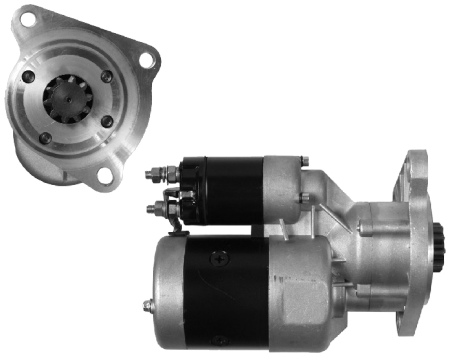

AS S9045

MAGNETON
9142765

3(0) 2.7 kW 12V
A:92 B:17
t10 (CW)

AS S9046

MAGNETON
9142805

HC PARTS
CS503
3(0) 2.7 kW 12V
A:89 B:47
t9 (CW)

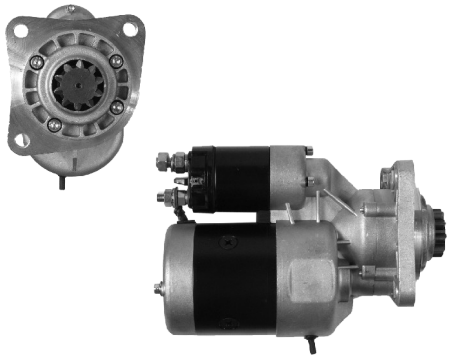

AS S9047

MAGNETON
9142702

CARGO
113269
3(0) 2.7 kW 12V
A:89 B:34
t10 (CW)

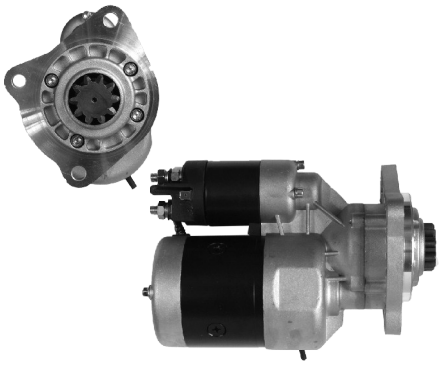

AS S9048

MAGNETON
9142743

3(0) 2.7 kW 12V
A:89 B:30
t10 (CW)

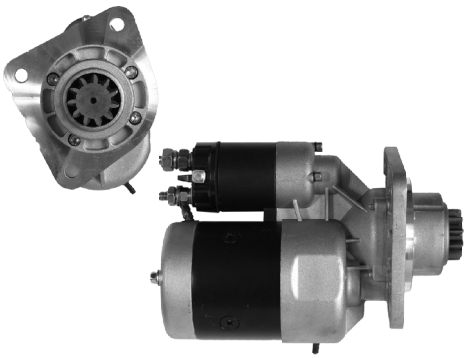

AS S9049

MAGNETON
9142742

3(0) 2.7 kW 12V
A:89 B:47
t11 (CW)

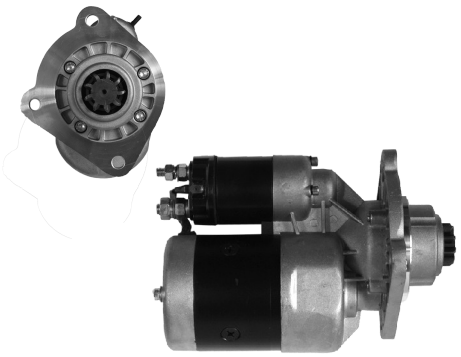

AS S9050

MAGNETON
9142723

3(0) 2.7 kW 12V
A:89 B:46
t9 (CW)

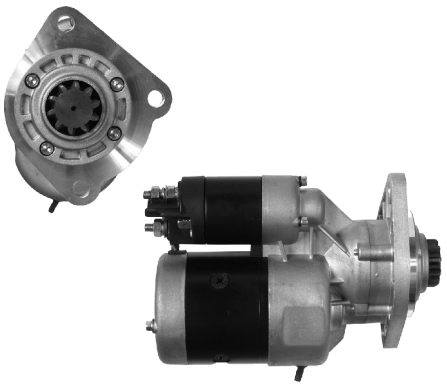

AS S9051

MAGNETON
9142720

3(0) 2.7 kW 12V
A:89 B:31
t10 (CW)

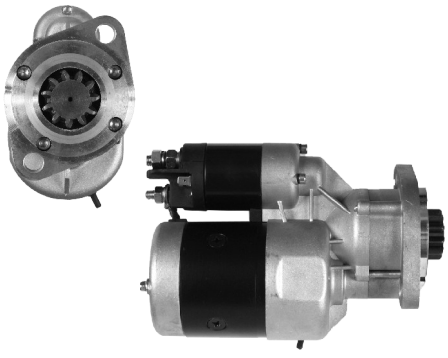

AS S9052

MAGNETON
9142602

HC PARTS
CS996
2(0) 2.7 kW 12V
A:82 B:22
t11 (CW)

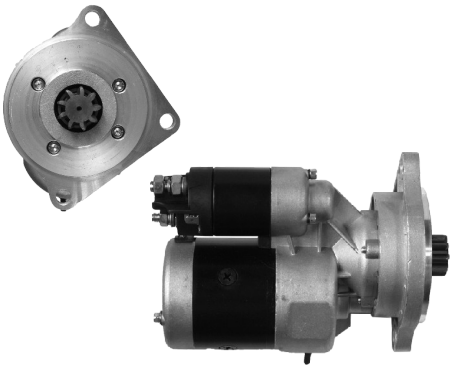

AS S9053

MAGNETON
9142687

3(0) 2.7 kW 12V
A:110 B:26
t9 (CW)

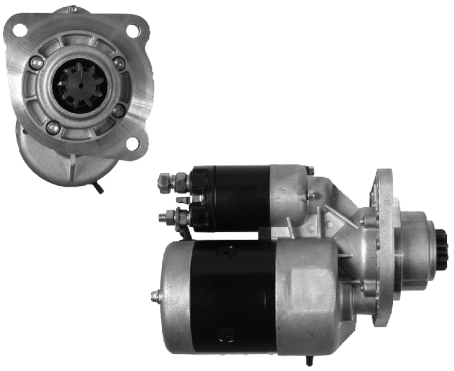

AS S9054

MAGNETON
9142744

3(0) 2.7 kW 12V
A:89 B:47
t9 (CW)

STARTERS
OTHER

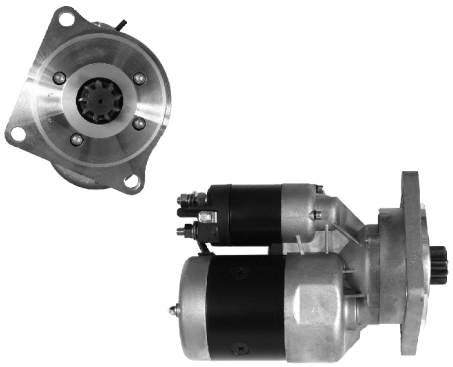

AS S9055

MAGNETON
9142680

HC PARTS
CS240
3(0) 2.7 kW 12V
A:110 B:26
t9 (CW)

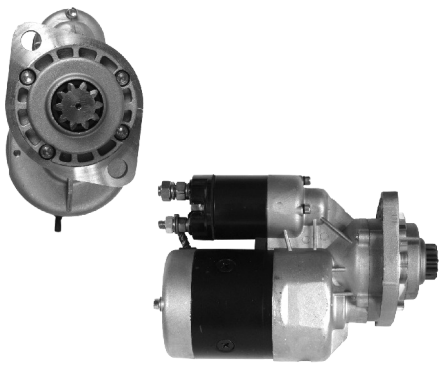

AS S9056

MAGNETON
9142700

CARGO
CS395
2(0) 2.7 kW 12V
A:82 B:36
t10 (CW)

AS S9057

MAGNETON
9141312

CARGO
CS156
2(0) 1 kW 12V
A:76 B:26
t9 (ACW)

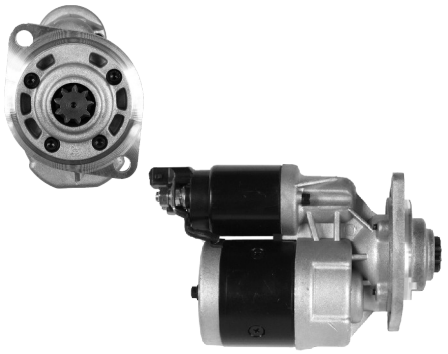

AS S9058

MAGNETON
9141399

HC PARTS
CS1047
2(0) 1.7 kW 12V
A:76 B:27
t9 (ACW)

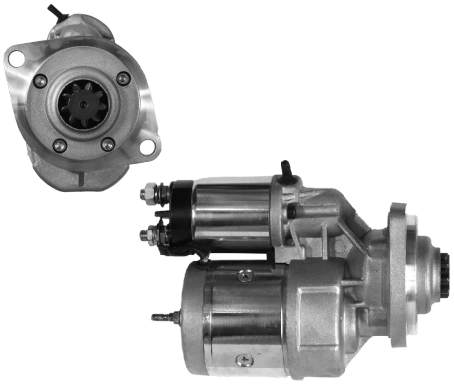

AS S9059

MAGNETON
9141460

2(0) 1 kW 12V
A:76 B:26
t9 (CW)

AS S9060

MAGNETON
9142745

3(0) 2.7 kW 12V
A:89 B:47
t10 (CW)

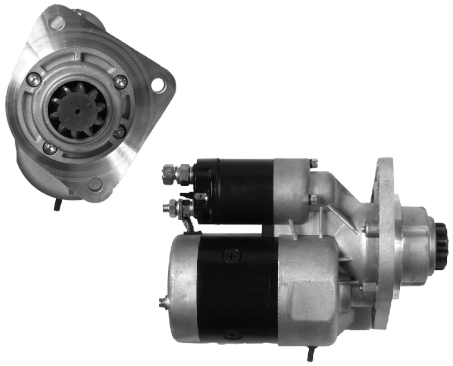

AS S9061

MAGNETON
9142741

3(0) 2.7 kW 12V
A:88 B:48
t10 (CW)

AS S9062

OPEL / FIAT
6202084
55556092
71748653

HC PARTS
CS1438
2(0) 1.1 kW 12V
A:68 B:19
t9 (CW)

AS S9063

FORD
1379703
1525795
6G9N-11000-JA
6G9N-11000-JB

HC PARTS
CS1430
3(2) 1.4 kW 12V
A:70.5 B:-1.5
t10 (CW)

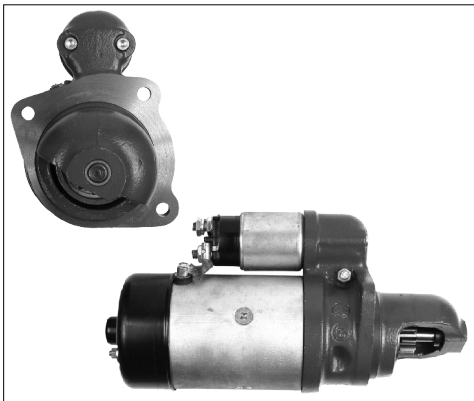

AS S9064R

ELMOT
R10C

3(0) 4.8 kW 24V
A:89 B:49
t11 (CW)

R - rebuild

AS S9065R

ELMOT
R20A

3(0) 6.6 kW 24V
A:92 B:49
t12 (CW)

R - rebuild

AS S9066R

ELMOT
R10A

3(0) 4.8 kW 24V
A:92 B:49
t11 (CW)

R - rebuild

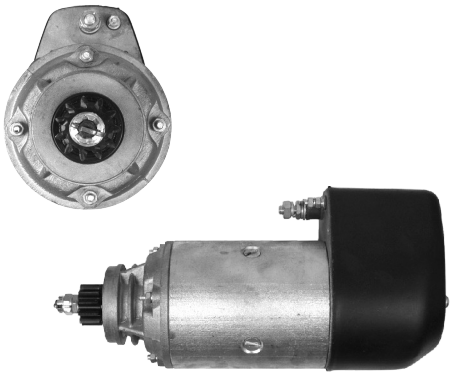

AS S9067R

ORIGINAL
IM18

HC PARTS
CS950

0(0) 4 kW 24V
A:75 B:37
t11 (CW)

R - rebuild

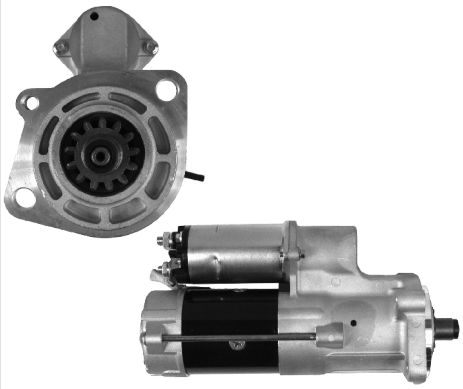

AS S9068

ISUZU
8-98070063-0
8-98070321-1

3(0) 5.0 kW 24V
A:90 B:10
t13

A, B - page 170

STARTER ARMATURES
BOSCH

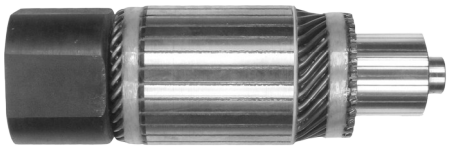

AS SA0001

ORIGINAL
2004005023

CARGO
131311

Slots:	29
Length:	256 mm
O.D. Ø	83 mm
	6.6 kW
	24 V

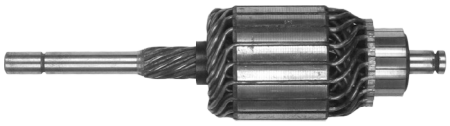

AS SA0002

ORIGINAL
1004012416

CARGO
133208

Splines:	10
Slots:	19
Length:	232 mm
O.D. Ø	60 mm
	0.9 kW
ACW	12 V

AS SA0003

ORIGINAL
1004003137
1004003904

CARGO
138334

Splines:	10
Slots:	33
Length:	253 mm
O.D. Ø	65 mm
	1.1 kW
ACW	12 V

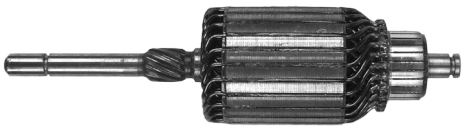

AS SA0004

ORIGINAL
1004011104

CARGO
135098

Splines:	10
Slots:	25
Length:	227 mm
O.D. Ø	58.9 mm
	1 kW
	12 V

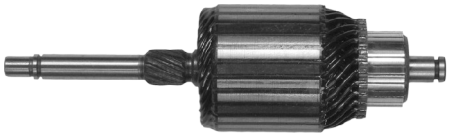

AS SA0005

ORIGINAL
1004011018
1004011118

CARGO
136783

Splines:	10
Slots:	28
Length:	206.5 mm
O.D. Ø	59 mm
	0.8/0.9 kW
	12 V

AS SA0006

ORIGINAL
1004011122

CARGO
136020

Splines:	10
Slots:	28
Length:	239.5 mm
O.D. Ø	59 mm
	0.9 kW
ACW	12 V

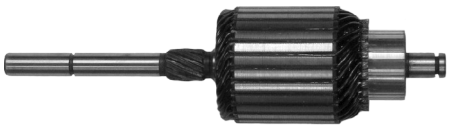

AS SA0007

ORIGINAL
1004011123

CARGO
136988

Splines:	10
Slots:	28
Length:	224.5 mm
O.D. Ø	59 mm
	0.8/0.9 kW
	12 V

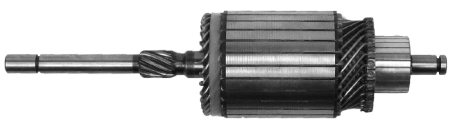

AS SA0008

ORIGINAL
1004003176

CARGO
138330

Splines:	10
Slots:	27
Length:	271 mm
O.D. Ø	65 mm
	1.5 kW
	12 V

AS SA0009

ORIGINAL
2004005022
2004005153

CARGO
130120

Slots:	29
Length:	235.5 mm
O.D. Ø	83 mm
	5 kW
SHORT	24 V

STARTER ARMATURES
BOSCH

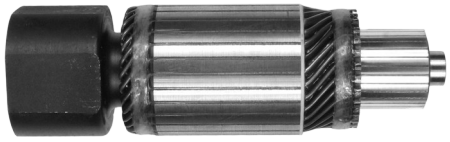

AS SA0010

ORIGINAL
2004005025
2004005151
CARGO
130320

Slots:	29
Length:	270.3 mm
O.D. Ø	83 mm
	5.5 kW
LONG	24 V

AS SA0011

ORIGINAL
2004002032
CARGO
133107

Splines:	10
Slots:	33
Length:	248 mm
O.D. Ø	60 mm
	0.8 kW
ACW	12 V

AS SA0012

ORIGINAL
2004004112
CARGO
130319

Splines:	10
Slots:	33
Length:	333 mm
O.D. Ø	74.8 mm
	3 kW
	12 V

AS SA0013

ORIGINAL
2004004111
CARGO
130119

Splines:	10
Slots:	33
Length:	333 mm
O.D. Ø	74.8 mm
	4 kW
	24 V

AS SA0014

ORIGINAL
2004004075
CARGO
130116

Splines:	10
Slots:	21
Length:	285 mm
O.D. Ø	74.8 mm
	2 kW
	12 V

AS SA0015

ORIGINAL
2004004074
2004004092
CARGO
130115, 132158

Splines:	10
Slots:	21
Length:	290.5 mm
O.D. Ø	74.8 mm
	2.4 kW
	12 V

AS SA0016

ORIGINAL
2004004033
CARGO
131309

Splines:	10
Slots:	33
Length:	337 mm
O.D. Ø	74.8 mm
	4 kW
	24 V

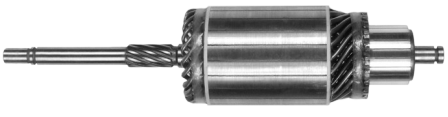

AS SA0017

ORIGINAL
2004004003
CARGO
131075

Splines:	10
Slots:	21
Length:	337 mm
O.D. Ø	74.8 mm
	3 kW
	12 V

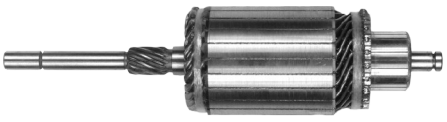

AS SA0018

ORIGINAL
1004003150
CARGO
131839

Splines:	10
Slots:	21
Length:	263 mm
O.D. Ø	65 mm
	1.7 kW
	12 V

STARTER ARMATURES
BOSCH

AS SA0019

ORIGINAL
1004003151

CARGO
131435

Splines:	10
Slots:	23
Length:	262 mm
O.D. Ø	65 mm
	1.7 kW
ACW	12 V

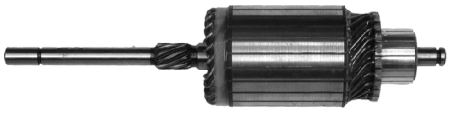

AS SA0020

ORIGINAL
1004003152

CARGO
132164

Splines:	10
Slots:	23
Length:	282.5 mm
O.D. Ø	65.5 mm
	1.7 kW
ACW	12 V

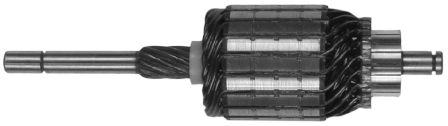

AS SA0021

ORIGINAL
1004012408

CARGO
131063

Splines:	10
Slots:	19
Length:	231.5 mm
O.D. Ø	60 mm
	0.85 kW
	12 V

AS SA0022

ORIGINAL
1004012411

CARGO
132162

Splines:	10
Slots:	19
Length:	239.5 mm
O.D. Ø	60 mm
	0.8/0.85/0.95 kW
	12 V

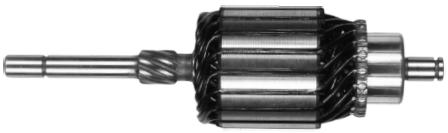

AS SA0023

ORIGINAL
1004012421
1004012905

CARGO
132153

Splines:	10
Slots:	19
Length:	217 mm
O.D. Ø	60 mm
	0.85/0.95 kW
	12 V

AS SA0024

ORIGINAL
1004012415

CARGO
132325

Splines:	10
Slots:	19
Length:	227 mm
O.D. Ø	60 mm
	0.95 kW
ACW	12 V

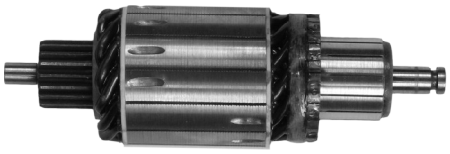

AS SA0025

ORIGINAL
1004012450

CARGO
132031

Tooth:	18
Slots:	13
Length:	158 mm
O.D. Ø	50 mm
	2.2 kW
	12 V

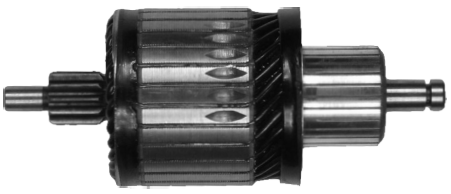

AS SA0026

ORIGINAL
1004011023
1004011024

CARGO
132816

Tooth:	11
Slots:	28
Length:	136 mm
O.D. Ø	55 mm
	1.1 kW
	12 V

AS SA0027

ORIGINAL
1004011031

CARGO
134887, 132814

Tooth:	15
Slots:	23
Length:	161 mm
O.D. Ø	58.9 mm
	1.7/1.8 kW
	12 V

STARTER ARMATURES
BOSCH

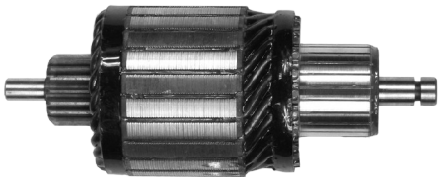

AS SA0029

ORIGINAL
1004011041
1004011045
CARGO
136231

Tooth:	18
Slots:	23
Length:	148 mm
O.D. Ø	58.9 mm
	1.6 kW
	12 V

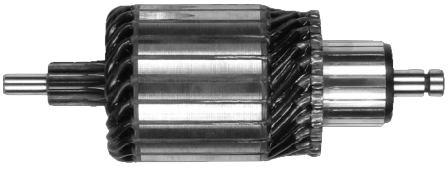

AS SA0030

ORIGINAL
1004011040

CARGO
138674

Tooth:	11
Slots:	23
Length:	163 mm
O.D. Ø	59 mm
	1.7 kW
	12 V

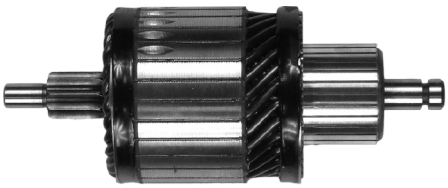

AS SA0031

ORIGINAL
1004011043
1004011057
CARGO
137070

Tooth:	9
Slots:	28
Length:	138.5 mm
O.D. Ø	54.9 mm
	1.4 kW
	12 V

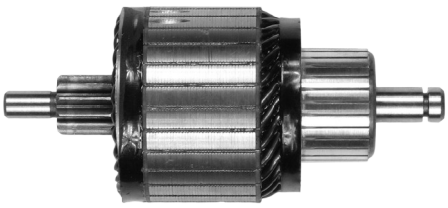

AS SA0032

ORIGINAL
1004011039
1004011042
CARGO
134514

Tooth:	11
Slots:	28
Length:	123 mm
O.D. Ø	54.9 mm
	1.1 kW
	12 V

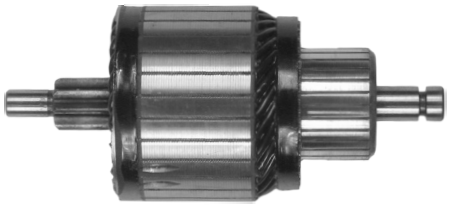

AS SA0033

ORIGINAL
1004011042
1004011058
CARGO
137069

Tooth:	9
Slots:	28
Length:	123 mm
O.D. Ø	55 mm
	1.1 kW
	12 V

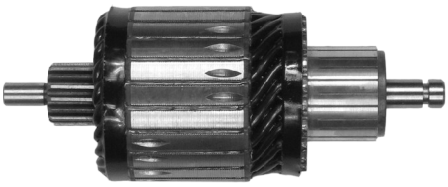

AS SA0034

ORIGINAL
1004011074
1004011087
CARGO
137284

Tooth:	16
Slots:	23
Length:	149 mm
O.D. Ø	59 mm
	2 kW
	12 V

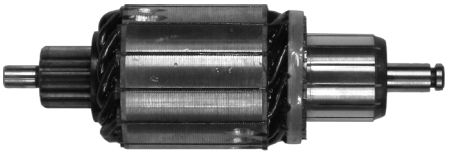

AS SA0036

ORIGINAL
9003334031

CARGO
136784

Tooth:	15
Slots:	13
Length:	151.5 mm
O.D. Ø	50 mm
	2.2 kW
	12 V

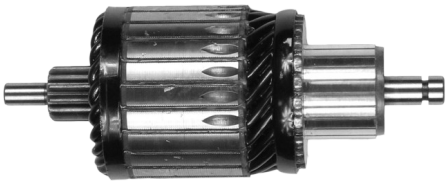

AS SA0037

ORIGINAL
1004011072

CARGO
137893

Tooth:	13
Slots:	23
Length:	149 mm
O.D. Ø	59 mm
	1.8/2 kW
	12 V

AS SA0038

ORIGINAL
1004011082

CARGO
139703

Tooth:	16
Slots:	23
Length:	143 mm
O.D. Ø	59 mm
	2 kW
	12 V

STARTER ARMATURES
BOSCH

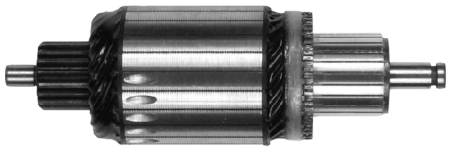

AS SA0039

ORIGINAL
9003334024

CARGO
138254

Tooth:	18
Slots:	23
Length:	158 mm
O.D. Ø	50 mm
	2.5 kW
	24 V

AS SA0040

ORIGINAL
1004003130
1004003138

CARGO
131663

Splines:	10
Slots:	27
Length:	262.5 mm
O.D. Ø	65 mm
	1.5 kW
	12 V

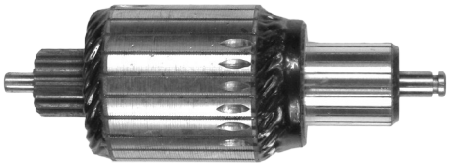

AS SA0041

ORIGINAL
6033AD0285
9003334039

CARGO
139657

Tooth:	16
Slots:	23
Length:	169 mm
O.D. Ø	60 mm
	4 kW
	24 V

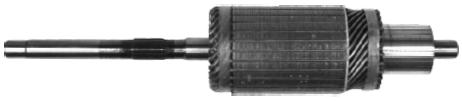

AS SA0042

ORIGINAL
2004005003
2007010059

CARGO
132904

Splines:	19
Slots:	25
Length:	428.5 mm
O.D. Ø	84.8 mm
	7.5 kW
	24 V

AS SA0043

ORIGINAL
1004012404
1004012407

CARGO
130062

Splines:	10
Slots:	
Length:	222 mm
O.D. Ø	60 mm
	0.8 kW
	12 V

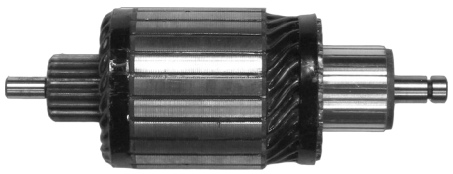

AS SA0044

ORIGINAL
1004001033

CARGO
132815

Tooth:	18
Slots:	23
Length:	163 mm
O.D. Ø	59 mm
	1.7 kW
	12 V

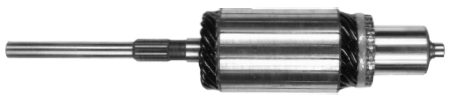

AS SA0045

ORIGINAL
2004014028

CARGO
231272

Splines:	19
Slots:	
Length:	393 mm
O.D. Ø	75 mm
	6.7 kW
	24 V

AS SA0046

ORIGINAL
2004014034

CARGO
231493

Splines:	19
Slots:	29
Length:	370 mm
O.D. Ø	75 mm
	6.2 kW
	24 V

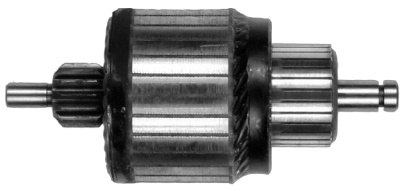

AS SA0047

ORIGINAL
1004011083

CARGO
139658

Tooth:	14
Slots:	28
Length:	123.5 mm
O.D. Ø	55 mm
	1.1 kW
	12 V

STARTER ARMATURES
BOSCH

AS SA0048

ORIGINAL
2004005026

CARGO
133486

Slots:	29
Length:	235 mm
O.D. Ø	83 mm
	3.6 kW
	12 V

AS SA0049

ORIGINAL
1004011208

CARGO
230371

Tooth:	11
Slots:	23
Length:	149 mm
O.D. Ø	59 mm
	2 kW
	12 V

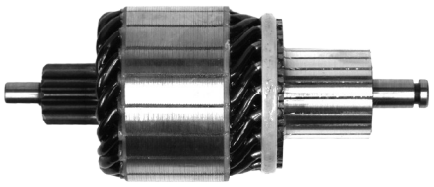

AS SA0050

ORIGINAL
6033AD0446
6033AD1061

CARGO
233698

Tooth:	14
Length:	140 mm
O.D. Ø	58 mm
	2.3 kW
	12 V

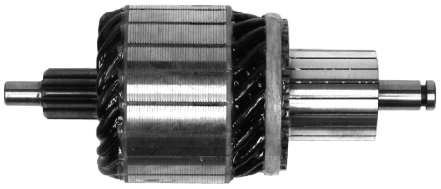

AS SA0051

ORIGINAL
6033AD0206
6033AD1107

CARGO
234244

Tooth:	11
Slots:	19
Length:	140.00 mm
O.D. Ø	58.00 mm
	2.3 kW
	12 V

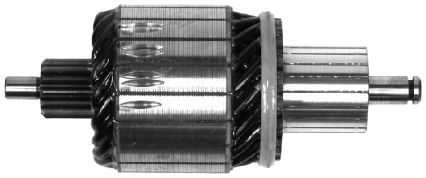

AS SA0052

ORIGINAL
6033AD0010
6033AD0436

CARGO
233475

Teeth:	14
Slots:	19
Length:	144 mm
O.D. Ø	58 mm
	2.3 kW
	12 V

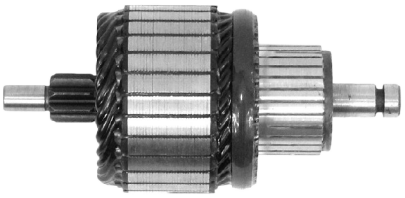

AS SA0053

ORIGINAL
1004011089

CARGO
231065

Tooth:	9
Length:	115.5 mm
O.D. Ø	55.15 mm
	0.9 kW
	12 V

AS SA0054

ORIGINAL
1004011139
1004011142

CARGO
234895

Splines:	10
Length:	188.8 mm
O.D. Ø	59 mm
	0.7 kW
	12 V

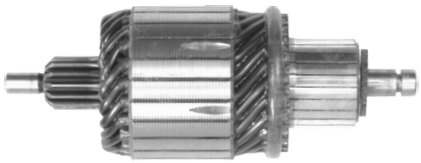

AS SA0055

ORIGINAL
1004011216

CARGO
235212

Tooth:	14
Length:	145.5 mm
O.D. Ø	55 mm
	1.4/1.7 kW
	12 V

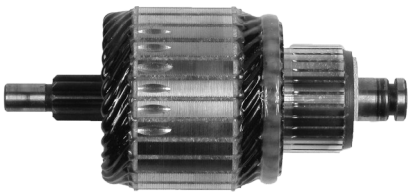

AS SA0056

ORIGINAL
1004011212

CARGO
235324

Tooth:	9
Length:	114 mm
O.D. Ø	52 mm
	1.1 kW
	12 V

STARTER ARMATURES
BOSCH

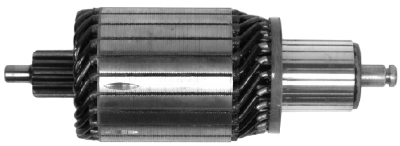

AS SA0057

ORIGINAL
6033AD5025

for 0001241001

Tooth:	13
Length:	174 mm
O.D. Ø	60 mm
	5.5 kW
	24 V

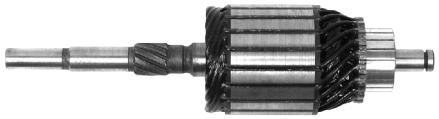

AS SA0058

ORIGINAL
1004012427
1004012904
CARGO
134436

Splines:	10
Slots:	
Length:	231.5 mm
O.D. Ø	60 mm
	0.95 kW
	12 V

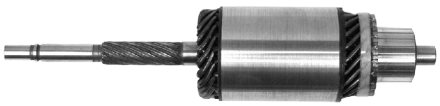

AS SA0059

ORIGINAL
9001083498

CARGO
138849

Splines:	10
Slots:	
Length:	330 mm
O.D. Ø	73 mm
	4 kW
	24 V

AS SA0060

ORIGINAL
1004011245

Tooth:	
Slots:	
Length:	
O.D. Ø	
	1.1 kW
	12 V

STARTER ARMATURES
DELCO

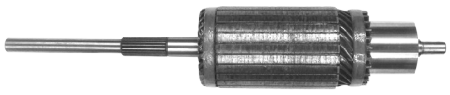

AS SA1001

ORIGINAL
1961320

CARGO
130551

Splines:	19
Slots:	25
Length:	467 mm
O.D. Ø	84.3 mm
	12 V

AS SA1002

ORIGINAL
1945500
1948508

CARGO
130923

Splines:	19
Slots:	25
Length:	467 mm
O.D. Ø	84.3 mm
	24 V

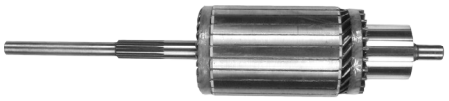

AS SA1003

ORIGINAL
1945840

CARGO
130554

Splines:	19
Slots:	25
Length:	482.6 mm
O.D. Ø	96 mm
Short shaft	24 V

AS SA1004

ORIGINAL
1951254

CARGO
130553

Splines	19
Slots:	25
Length:	532 mm
O.D. Ø	96 mm
Long shaft	24 V

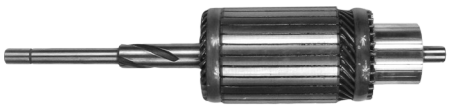

AS SA1005

ORIGINAL
1985249

CARGO
131354

Splines:	3
Slots:	29
Length:	392.1 mm
O.D. Ø	84.3 mm
	12 V

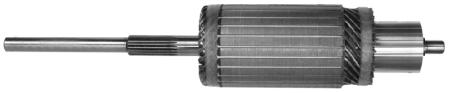

AS SA1006

ORIGINAL
1887989

CARGO
131365

Splines:	19
Slots:	25
Length:	451 mm
O.D. Ø	84.3 mm
	12 V

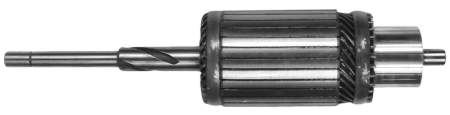

AS SA1007

ORIGINAL
1988322

CARGO
131359

Splines:	3
Slots:	29
Length:	392.1 mm
O.D. Ø	84.3 mm
	24 V

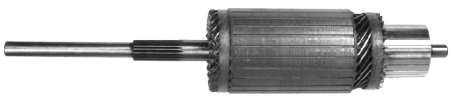

AS SA1008

ORIGINAL
1988435

CARGO
131350

Splines:	19
Slots:	25
Length:	451 mm
O.D. Ø	84.3 mm
	24 V

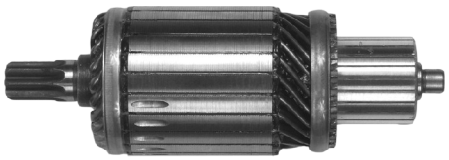

AS SA1009

ORIGINAL
10456466

CARGO
133850

Tooth:	8
Slots:	23
Length:	177 mm
O.D. Ø	60 mm
	12 V

STARTER ARMATURES
DELCO

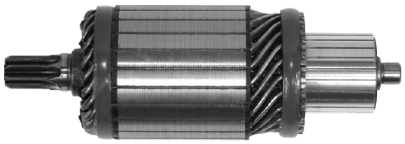

AS SA1010

ORIGINAL
10457117

CARGO
135089

Tooth:	8
Slots:	23
Length:	178 mm
O.D. Ø	60 mm
	24 V

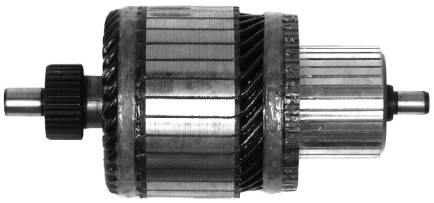

AS SA1011

ORIGINAL
10498530
10498586
CARGO
230553

Tooth:	24
Length:	140 mm
O.D. Ø	63 mm
	12 V

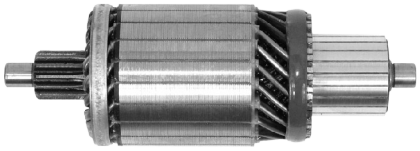

AS SA1012

ORIGINAL
10511758

CARGO
233960

Tooth:	14
Slots:	20
Length:	196 mm
O.D. Ø	68 mm
	6.2 kW
	12 V

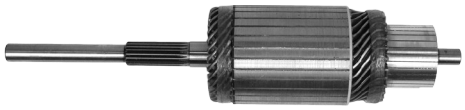

AS SA1013

ORIGINAL
10472559

CARGO
232891

Tooth:	19
Length:	391 mm
O.D. Ø	84.5 mm
	24 V

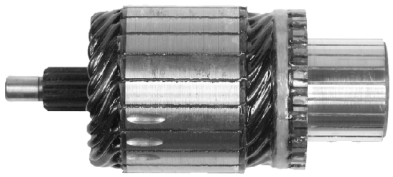

AS SA1014

ORIGINAL
10475588
10475597
CARGO
230604

Tooth:	12
Slots:	21
Length:	120.5 mm
O.D. Ø	53 mm
	12 V

STARTER ARMATURES
HITACHI

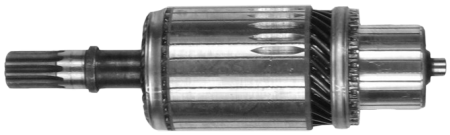

AS SA2001

ORIGINAL
2130-51002
2130-51003
CARGO
132798

Tooth:	11
Slots:	27
Length:	188 mm
O.D. Ø	52.7 mm
	2.5 kW
	12 V

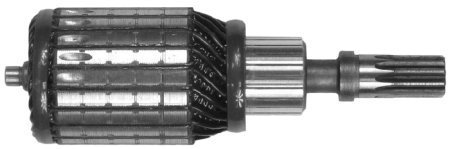

AS SA2002

ORIGINAL
2114-71005
CARGO
132454

Tooth:	11
Slots:	21
Length:	167.8 mm
O.D. Ø	53 mm
	1.4 kW
	12 V

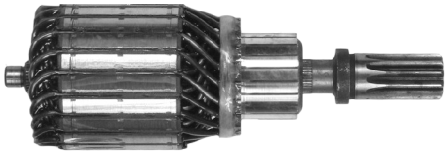

AS SA2003

ORIGINAL
2114-61005
CARGO
134121

Tooth:	11
Slots:	21
Length:	160 mm
O.D. Ø	53 mm
	1.2 kW
	12 V

AS SA2004

ORIGINAL
2114-91001
CARGO
133031

Splines:	10
Slots:	33
Length:	205 mm
O.D. Ø	65 mm
	1.2/1.3 kW
	12 V

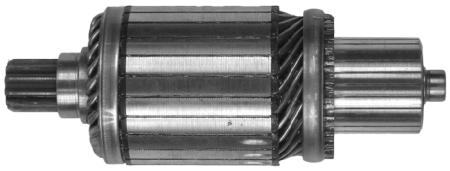

AS SA2005

ORIGINAL
2270-3100
CARGO
133056

Tooth:	11
Slots:	25
Length:	165 mm
O.D. Ø	60 mm
	3.5 kW
	24 V

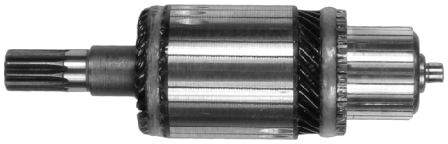

AS SA2006

ORIGINAL
2130-31002
CARGO
132456

Tooth:	11
Slots:	27
Length:	173 mm
O.D. Ø	52.5 mm
	2 kW
	12 V

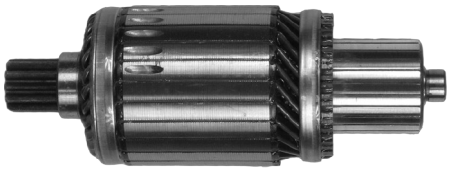

AS SA2007

ORIGINAL
2130-11001
CARGO
137092

Tooth:	11
Slots:	25
Length:	165 mm
O.D. Ø	60 mm
	2.5 kW
	12 V

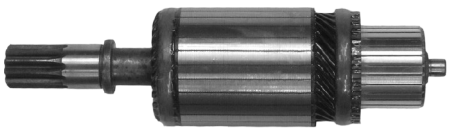

AS SA2008

ORIGINAL
2130-41003
CARGO
136248

Tooth:	11
Slots:	27
Length:	195 mm
O.D. Ø	52.7 mm
	2.5 kW
	12 V

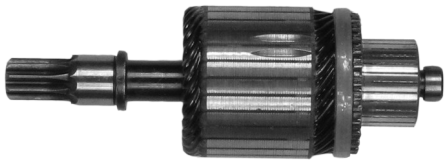

AS SA2009

ORIGINAL
2114-41100
CARGO
137120

Tooth:	9
Slots:	29
Length:	144.5 mm
O.D. Ø	49.7 mm
	1.4 kW
	12 V

STARTER ARMATURES
HITACHI

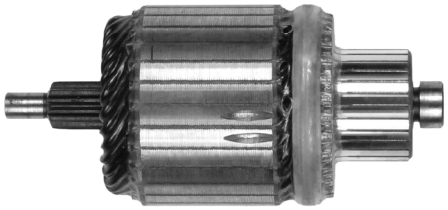

AS SA2010

ORIGINAL
2114-11111
2114-21111
CARGO
137948

Tooth:	8
Slots:	29
Length:	110 mm
O.D. Ø	50.5 mm
	1.4 kW
	12 V

AS SA2011

ORIGINAL
2130-61004
CARGO
136249

Tooth:	11
Slots:	27
Length:	180 mm
O.D. Ø	52.7 mm
	2/2.2/2.5 kW
	12 V

AS SA2012

ORIGINAL
2114-31100
2114-41106
CARGO
137119

Tooth:	10
Slots:	25
Length:	106 mm
O.D. Ø	57 mm
	1.2 kW
	12 V

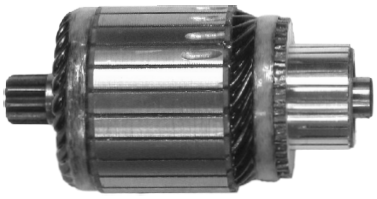

AS SA2013

ORIGINAL
2114-71105
CARGO
137304

Tooth:	10
Slots:	25
Length:	111.5 mm
O.D. Ø	57.8 mm
	1.4 kW
	12 V

AS SA2014

ORIGINAL
2114-61104
CARGO
138960

Splines:	10
Slots:	29
Length:	187 mm
O.D. Ø	52.6 mm
	0.8 kW
ACW	12 V

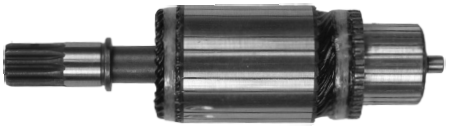

AS SA2015

ORIGINAL
2240-2100
CARGO
138830

Tooth:	11
Slots:	27
Length:	195 mm
O.D. Ø	53 mm
	3.0, 3.2, 3.5 kW
	24 V

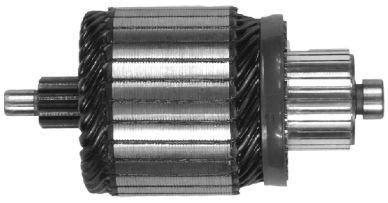

AS SA2016

ORIGINAL
2114-21100
2114-31109
CARGO
138701

Tooth:	10
Slots:	29
Length:	110 mm
O.D. Ø	55 mm
	1.4 kW
	12 V

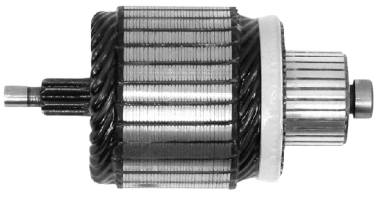

AS SA2017

ORIGINAL
2114-31200
CARGO
235337

Tooth:	8
Length:	110.9 mm
O.D. Ø	55 mm
	1.7 kW
	12 V

AS SA2018

ORME
IM3136
for S13-555A

Tooth:	9
Slots:	27
Length:	173 mm
O.D. Ø	52.8 mm
	12 V

STARTER ARMATURES
VALEO

AS SA3001

ORIGINAL
594528

CARGO
230250

Tooth:	7
Slots:	23
Length:	112 mm
O.D. Ø	44 mm
	1.1 kW
	12 V

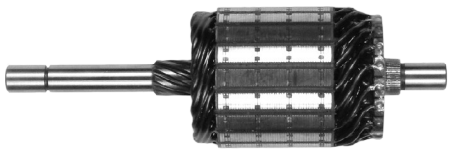

AS SA3002

ORIGINAL
101581
102380
CARGO
131813

Splines:	9
Slots:	19
Length:	188.5 mm
O.D. Ø	60 mm
	1.05/1.2 kW
	12 V

AS SA3003

ORIGINAL
182049
182175
CARGO
132027

Tooth:	15
Slots:	19
Length:	137 mm
O.D. Ø	59.9 mm
	2/2.2/3.1 kW
	12 V

AS SAP3001

CARGO
135867

Tooth:	15

AS SA3005

ORIGINAL
594529

CARGO
139593

Tooth:	8
Slots:	23
Length:	112 mm
O.D. Ø	44 mm
	1.1 kW
	12 V

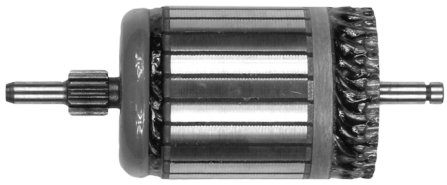

AS SA3006

ORIGINAL
594026

CARGO
134513

Tooth:	13
Slots:	23
Length:	112 mm
O.D. Ø	44 mm
	1.1 kW
	12 V

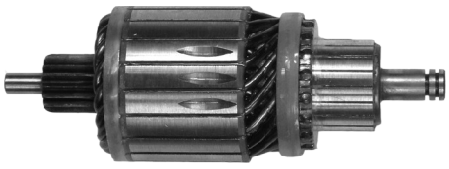

AS SA3007

ORIGINAL
182591

CARGO
135387

Tooth:	16
Slots:	19
Length:	141.5 mm
O.D. Ø	50 mm
	1.4/1.7 kW
	12 V

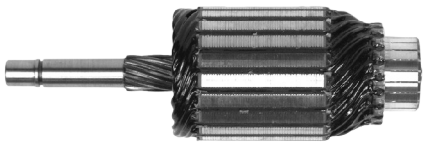

AS SA3008

ORIGINAL
594518

CARGO
233767

Splines:	10
Length:	155 mm
O.D. Ø	50 mm
	0.85 kW
	12 V

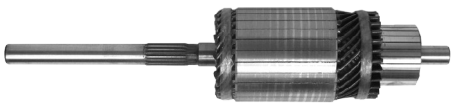

AS SA3009

ORIGINAL
594219

CARGO
233697

Tooth:	19
Length:	397 mm
O.D. Ø	85 mm
	6.6 kW
	24 V

STARTER ARMATURES
VALEO

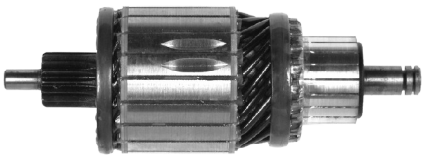

AS SA3010

ORIGINAL
594112

CARGO
239544

Tooth:	16
Slots:	19
Length:	142 mm
O.D. Ø	50 mm
	2.2 kW
	12 V

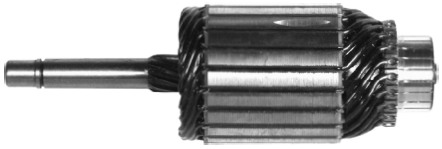

AS SA3011

ORIGINAL
594519

CARGO
139434

Splines:	10
Slots:	21
Length:	155.6 mm
O.D. Ø	50 mm
	0.85/1 kW
	12 V

STARTER ARMATURES
MAGNETI MARELLI/LUCAS

AS SA4001

ORIGINAL
74894221

CARGO
132817

Tooth:	11
Slots:	25
Length:	133.5 mm
O.D. Ø	59 mm
	2.2 kW
	12 V

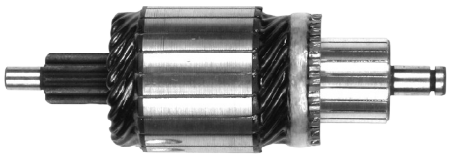

AS SA4002

ORIGINAL
83220271

CARGO
134365

Tooth:	11
Slots:	21
Length:	142.5 mm
O.D. Ø	47.4 mm
	1 kW
	12 V

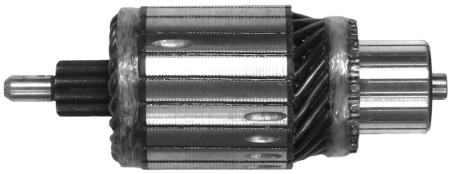

AS SA4003

ORIGINAL
83226316

CARGO
231159

Tooth:	11
Slots:	21
Length:	130.5 mm
O.D. Ø	48.5 mm
	1.8 kW
	12 V

AS SA4004

ORIGINAL
83227126

CARGO
138526

Tooth:	11
Slots:	21
Length:	120 mm
O.D. Ø	47.4 mm
	1.4 kW
	12 V

AS SA4005

ORIGINAL
54243590
TJB103

CARGO
130200

Splines:	12
Slots:	21
Length:	302 mm
O.D. Ø	84 mm
	2.8 kW
	12 V

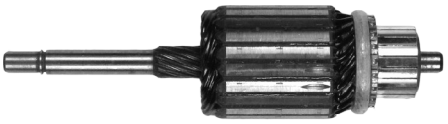

AS SA4006

ORIGINAL
83225127

CARGO
135620

Splines:	12
Slots:	21
Length:	202 mm
O.D. Ø	51.5 mm
	1 kW
	12 V

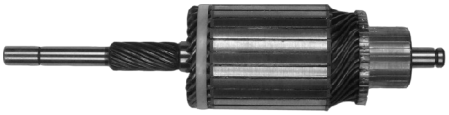

AS SA4007

ORIGINAL
74888921

CARGO
132849

Splines:	10
Slots:	27
Length:	266.5 mm
O.D. Ø	65 mm
	1.6 kW
	12 V

AS SA4008

ORIGINAL
74891011

CARGO
132619

Splines:	10
Slots:	19
Length:	231.5 mm
O.D. Ø	60 mm
	1.1 kW
	12 V

AS SA4009

ORIGINAL
72163701

CARGO
131472

Splines:	12
Slots:	23
Length:	292 mm
O.D. Ø	74.8 mm
	2.5 kW
	12 V

STARTER ARMATURES
MAGNETI MARELLI/LUCAS

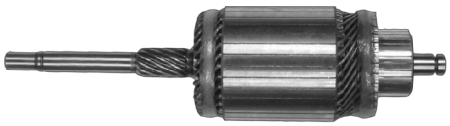

AS SA4010

ORIGINAL
72161601

CARGO
133030

Splines:	12
Slots:	33
Length:	292 mm
O.D. Ø	74.8 mm
	3 kW
	24 V

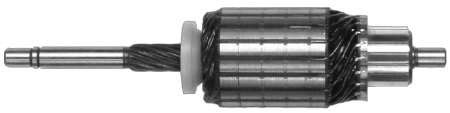

AS SA4011

ORIGINAL
74886931

CARGO
131132

Splines:	12
Slots:	19
Length:	232.5 mm
O.D. Ø	52 mm
	0.5 kW
	12 V

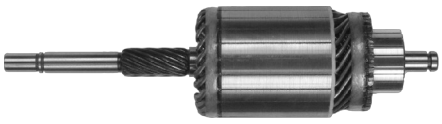

AS SA4012

ORIGINAL
72382301

CARGO
131670

Splines:	12
Slots:	23
Length:	296 mm
O.D. Ø	75 mm
	2.5 kW
	12 V

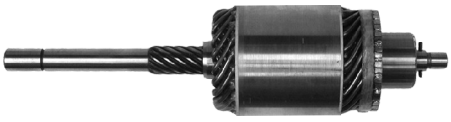

AS SA4013

ORIGINAL
54243592
TJB104
CARGO
130878

Splines:	12
Slots:	21
Length:	329 mm
O.D. Ø	84 mm
	2.8 kW
	12 V

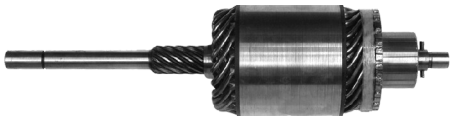

AS SA4014

ORIGINAL
54269554
TJB115
CARGO
137363

Splines:	12
Slots:	21
Length:	329 mm
O.D. Ø	84 mm
	2.8 kW
	12 V

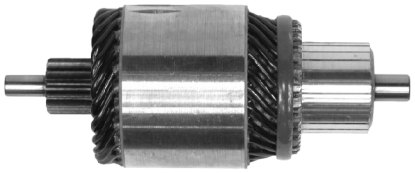

AS SA4015

CARGO
235662

Tooth:	14
Length:	147 mm
O.D. Ø	59 mm
	3 kW
	12 V

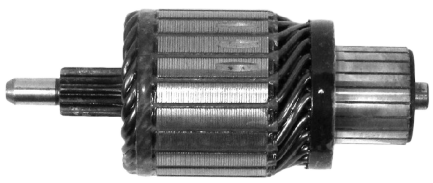

AS SA4016R

rebuild
ORIGINAL
54294703
CARGO
232267

Tooth:	13
Slots:	
Length:	119 mm
O.D. Ø	47.5 mm
	1.1 kW
	12 V

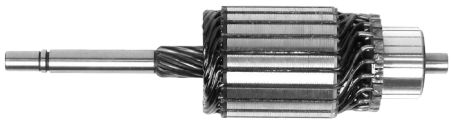

AS SA4017

for 63103031

CARGO
238843

Splines:	12
Length:	202 mm
O.D. Ø	51 mm
	1 kW
	12 V

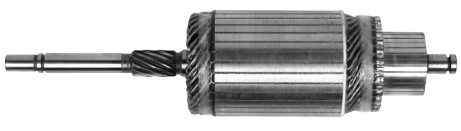

AS SA4018

ORIGINAL
72163201

CARGO
131470

Splines:	12
Slots:	33
Length:	317.5 mm
O.D. Ø	75 mm
	4 kW
	24 V

STARTER ARMATURES
MAGNETI MARELLI/LUCAS

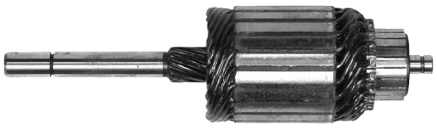

AS SA4019

ORIGINAL
83226902

CARGO
231481

Splines:	12
Slots:	21
Length:	178.5 mm
O.D. Ø	49 mm
	0.8 kW
	12 V

STARTER ARMATURES
MITSUBISHI

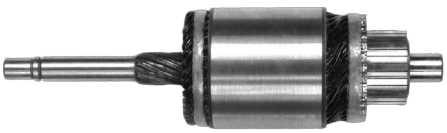

AS SA5001

ORIGINAL
M106T01970
M106T17371
CARGO
132762

Splines:	8
Slots:	33
Length:	217 mm
O.D. Ø	60 mm
	0.8 kW
	12 V

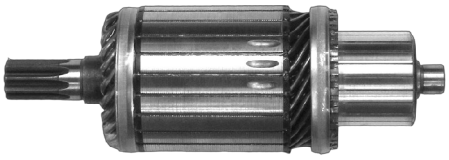

AS SA5002

ORIGINAL
M106X29171

CARGO
136196

Tooth:	9
Slots:	23
Length:	178 mm
O.D. Ø	60 mm
	4.5 kW
	24 V

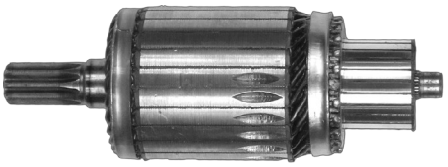

AS SA5003

ORIGINAL
M106X29371

CARGO
133034

Tooth:	9
Slots:	25
Length:	151 mm
O.D. Ø	53.5 mm
	3.2 kW
	24 V

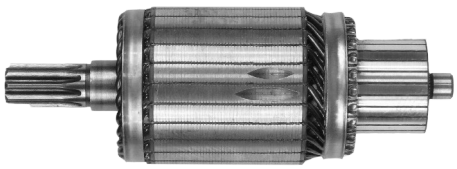

AS SA5004

ORIGINAL
M106X29871
M106X41672
CARGO
132486

Tooth:	9
Slots:	25
Length:	152 mm
O.D. Ø	53.7 mm
	2 kW
	12 V

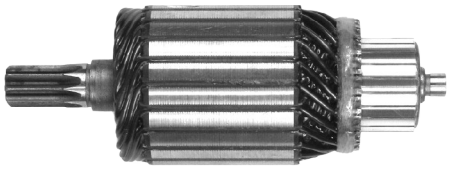

AS SA5005

ORIGINAL
M106X01171

CARGO
132484

Tooth:	9
Slots:	21
Length:	147 mm
O.D. Ø	53.7 mm
	1.4 kW
	12 V

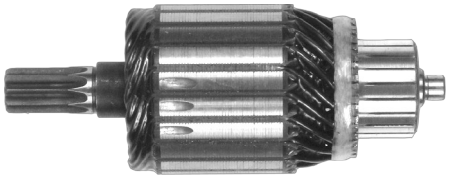

AS SA5006

ORIGINAL
M106X01271
MD607413
CARGO
134071

Tooth:	9
Slots:	21
Length:	140.3 mm
O.D. Ø	53.6 mm
	1.2 kW
	12 V

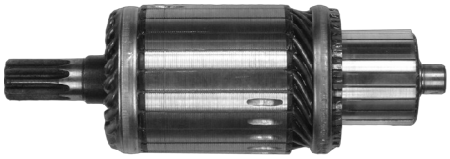

AS SA5007

ORIGINAL
M106X29272

CARGO
139646

Tooth:	9
Slots:	23
Length:	177.5 mm
O.D. Ø	60.2 mm
	2.5 kW
	12 V

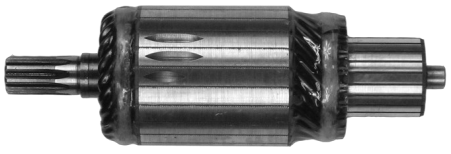

AS SA5008

ORIGINAL
M106X40671

CARGO
132487

Tooth:	9
Slots:	23
Length:	170 mm
O.D. Ø	53.8 mm
	2.2 kW
	12 V

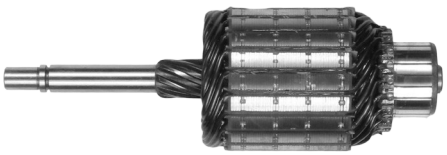

AS SA5009

ORIGINAL
M106T05770
M106T05771
CARGO
134736

Splines:	8
Slots:	21
Length:	182 mm
O.D. Ø	60 mm
	0.8 kW
	12 V

STARTER ARMATURES
MITSUBISHI

AS SA5010

ORIGINAL
M106X08671

CARGO
135832

Tooth:	11
Slots:	29
Length:	121.5 mm
O.D. Ø	53.7 mm
	1.2/1.4 kW
	12 V

AS SA5011

ORIGINAL
M106X06971
M106X50171

CARGO
136334

Tooth:	11
Slots:	29
Length:	121.5 mm
O.D. Ø	53.7 mm
	1.2/1.4 kW
	12 V

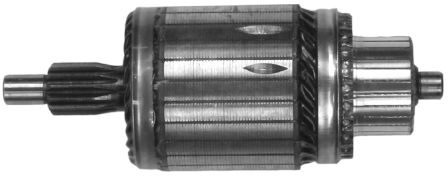

AS SA5012

ORIGINAL
M106X43571

CARGO
138962

Tooth:	13
Slots:	25
Length:	141 mm
O.D. Ø	53.5 mm
	2.0/2.2 kW
	12 V

AS SA5013

ORIGINAL
M106T57671

CARGO
139398

Tooth:	9
Slots:	29
Length:	106.5 mm
O.D. Ø	54 mm
	1 kW
	12 V

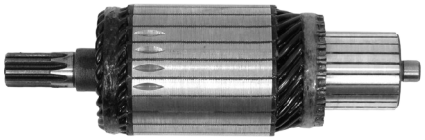

AS SA5014

ORIGINAL
M106X40871

CARGO
231771

Tooth:	9
Slots:	23
Length:	169.5 mm
O.D. Ø	53.6 mm
	5 kW
	24 V

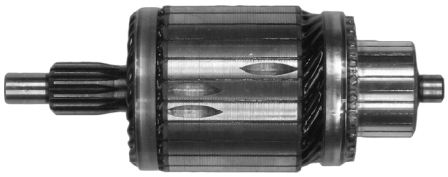

AS SA5015

ORIGINAL
M105X43771

CARGO
139825

Tooth:	13
Slots:	25
Length:	141.2 mm
O.D. Ø	53.5 mm
	3.2/3.7 kW
	24 V

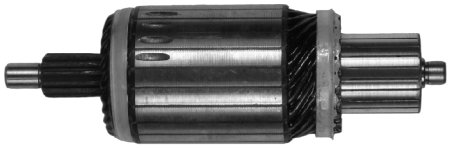

AS SA5016

ORME
IM3088

Tooth:	13
Slots:	23
Length:	169 mm
O.D. Ø	53.5 mm
	24 V

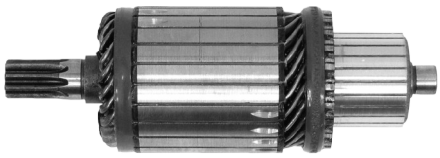

AS SA5017

ORIGINAL
M106X40471

CARGO
233337

Tooth:	9
Length:	178 mm
O.D. Ø	60.2 mm
	5.5/6 kW
	24 V

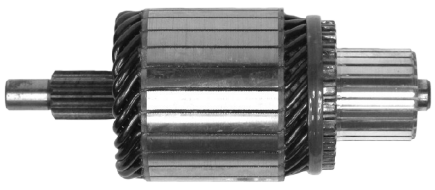

AS SA5018

CARGO
235247

Tooth:	11
Length:	133 mm
O.D. Ø	53.8 mm
	1.7 kW
	12 V

STARTER ARMATURES
MITSUBISHI

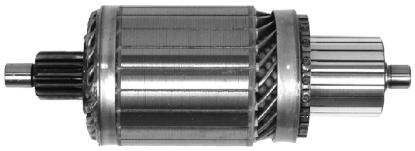

AS SA5019

ORIGINAL
M106X45071

CARGO
233961

Splines:	14
Length:	196 mm
O.D. Ø	68 mm
	8.2 kW
	24 V

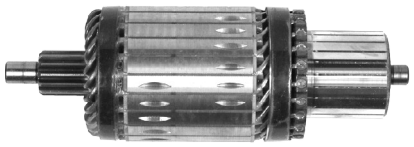

AS SA5020

CARGO
234100

Tooth:	13
Length:	177 mm
O.D. Ø	60.2 mm
	6 kW
	24 V

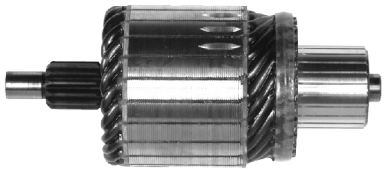

AS SA5021

CARGO
239829

Tooth:	13
Slots:	23
Length:	133 mm
O.D. Ø	57 mm
	1.9 kW
	12 V

AS SA5022

ORME
IM3138

CARGO
234974

Tooth:	11
Slots:	25
Length:	127.2 mm
O.D. Ø	53.8 mm
	1.4/1.7 kW
	12 V

STARTER ARMATURES
NIPPONDENSO

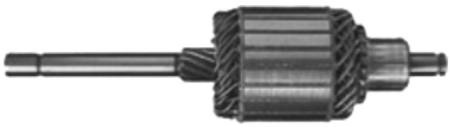

AS SA6001

ORIGINAL
028200-1820

CARGO
133389

Splines:	10
Slots:	21
Length:	226 mm
O.D. Ø	60 mm
	0.8 kW
	12 V

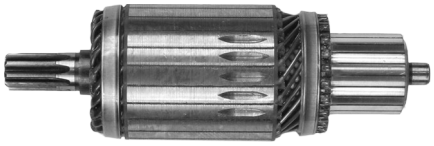

AS SA6002

ORIGINAL
027160-77090
028200-1590

CARGO
132553

Tooth:	9
Slots:	23
Length:	187 mm
O.D. Ø	60 mm
	4.5 kW
	24 V

AS SA6003

ORIGINAL
028200-1780

CARGO
132869

Tooth:	9
Slots:	23
Length:	187 mm
O.D. Ø	60 mm
	2.5 kW
	12 V

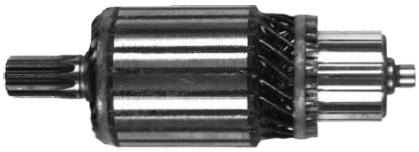

AS SA6004

ORIGINAL
028200-1531
028200-2120

CARGO
132796

Tooth:	9
Slots:	21
Length:	136 mm
O.D. Ø	47 mm
	0.9/1.1 kW
	12 V

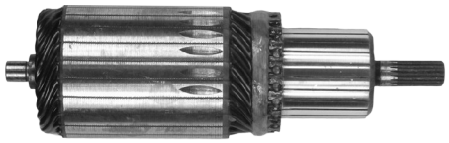

AS SA6005

ORIGINAL
028200-2140

CARGO
134369

Tooth:	19
Slots:	23
Length:	168 mm
O.D. Ø	50 mm
	2 kW
	12 V

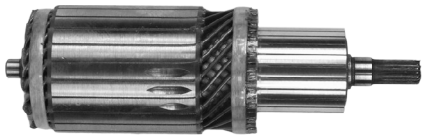

AS SA6006

ORIGINAL
028200-5250

CARGO
138675

Tooth:	18
Slots:	23
Length:	211 mm
O.D. Ø	65 mm
	5.5 kW
	24 V

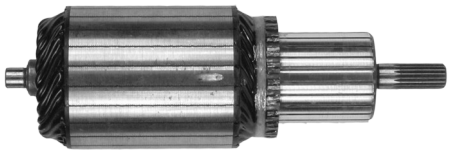

AS SA6007

ORIGINAL
028200-5040

CARGO
137978

Tooth:	19
Slots:	23
Length:	167 mm
O.D. Ø	54 mm
	2.2 kW
	12 V

STARTER ARMATURES
OTHER

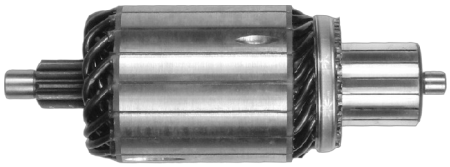

AS SA9001

FORD VISTEON
XC1U-11005-AA

CARGO
230739

Tooth:	11
Slots:	17
Length:	156 mm
O.D. Ø	54 mm
	1.9/2.2 kW
	12 V

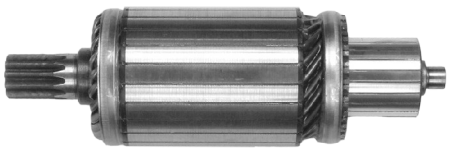

AS SA9002

NIKKO
7-23100-0220

CARGO
133391

Tooth:	11
Slots:	23
Length:	190 mm
O.D. Ø	59.5 mm
	5.5 kW
	24 V

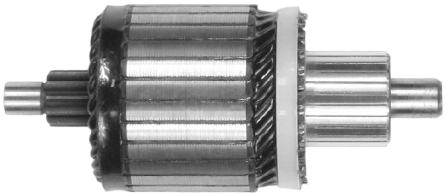

AS SA9003

FORD US
E90Z-11005-A

CARGO
136634

Tooth:	11
Slots:	28
Length:	129 mm
O.D. Ø	55.5 mm
	kW
	12 V

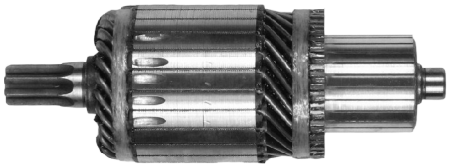

AS SA9004

SAWAFUJI
1320-077-01X0

CARGO
234106

Tooth:	8
Slots:	25
Length:	160 mm
O.D. Ø	58 mm
	4.5 kW
	24 V

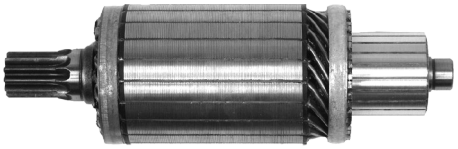

AS SA9005

SAWAFUJI
1320-097-00X0

CARGO
138964

Tooth:	12
Slots:	21
Length:	212 mm
O.D. Ø	65 mm
	6 kW
	24 V

AS SA9006

ELMOT
R10

Splines:	10
Slots:	27
Length:	350 mm
O.D. Ø	75 mm
	kW
	24 V

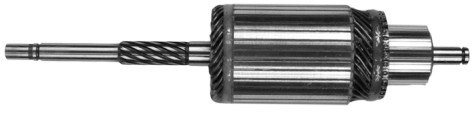

AS SA9007

ELMOT
R11

Splines:	10
Slots:	33
Length:	350 mm
O.D. Ø	75 mm
	kW
	12 V

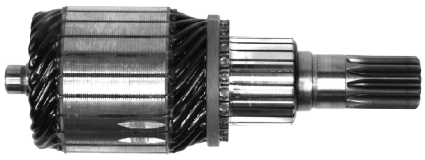

AS SA9008

MAGNETON
443937151540

CARGO
231680

Tooth:	12
Slots:	23
Length:	168 mm
O.D. Ø	60 mm
	3 kW
	12 V

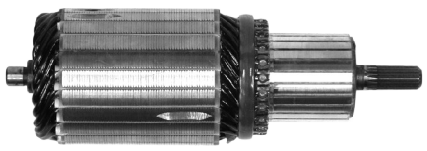

AS SA9009

FOR S9003

Tooth:	19
Slots:	23
Length:	168 mm
O.D. Ø	54 mm
	2.2 kW
	12 V

STARTER ARMATURES
OTHER

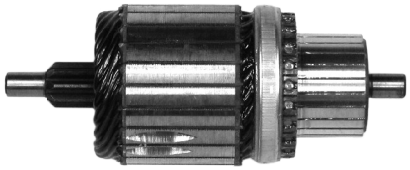

AS SA9010

	Splines:	9
	Slots:	23
	Length:	110.5 mm
	O.D. Ø	44.3 mm
CARGO		1.1 kW
235725		12 V

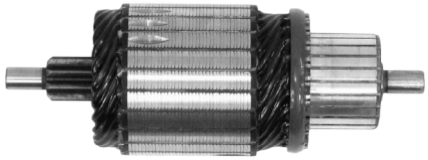

AS SA9011

FORD	Tooth:	9
XS6U-11000-B4A		
XS6U-11131-BA	Length:	122.5 mm
CARGO	O.D. Ø	44.6 mm
231080		12 V

STARTER ARMATURE
COMMUTATORS

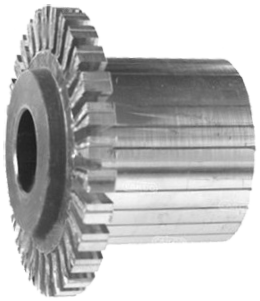

AS SAC0001

CARGO
B134578

Slots:	29
O.D.	77 mm
I.D.	22.10 mm
Height	56 mm

AS SAC9001

for R10

Slots:	
O.D.	
I.D.	
Height	

STARTER BRACKETS
BOSCH

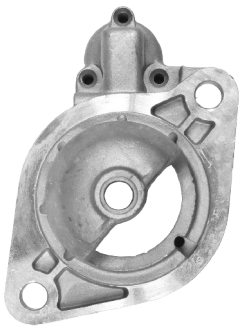

AS SBR0001

ORIGINAL	CARGO
1005821103	134864

AS SBR0002

ORIGINAL	CARGO
2005824570	132219

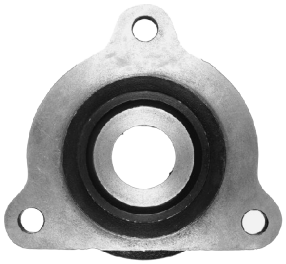

AS SBR0003

ORIGINAL	CARGO
2005825218	132221

AS SBR0004

ORIGINAL	CARGO
2005825071	231696

AS SBR0005

ORIGINAL	CARGO
2005825083	132049

AS SBR0006

ORIGINAL	CARGO
2005825359	231750

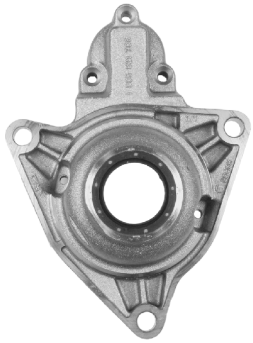

AS SBR0007

ORIGINAL	CARGO
1005821787	137630

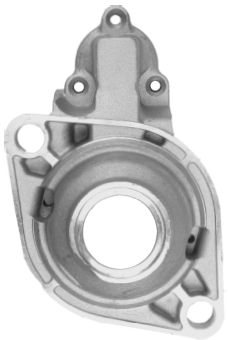

AS SBR0008

ORIGINAL	CARGO
1005821746	137915

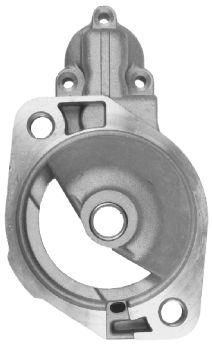

AS SBR0009

ORIGINAL	CARGO
9002335832	136353

STARTER BRACKETS
BOSCH

AS SBR0010

ORIGINAL	CARGO
1005822373	134528

AS SBR0011

ORIGINAL	CARGO
2005834035	135912

AS SBR0012

ORIGINAL	CARGO
6033AD5032	239091

for 0001241001

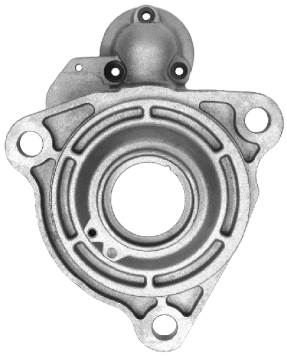

AS SBR0013

CARGO
237745

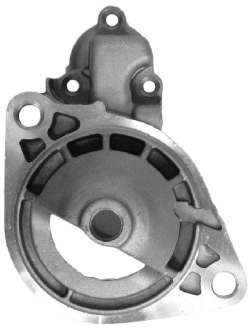

AS SBR0014

ORIGINAL	CARGO
1005821711	137327

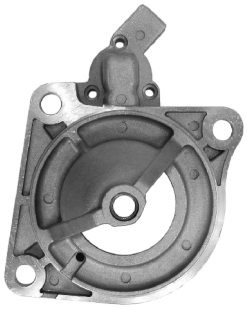

AS SBR0015

ORIGINAL	CARGO
9002338856	136049

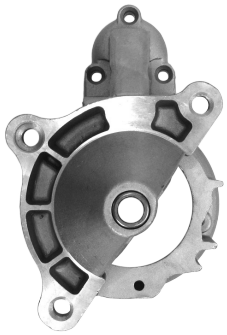

AS SBR0016

ORIGINAL	CARGO
9001338021	137633

AS SBR0017

ORIGINAL	CARGO
6033AD0174	231593
6033AD0231	
6033AD3172	
9001338056	

AS SBR0018

ORIGINAL
6033AD5125

STARTER BRACKETS
BOSCH

AS SBR0019

ORIGINAL	CARGO
2005824325	134493
2005824692	
2005824916	
2005834009	

AS SBR0020

ORIGINAL
1005831322

STARTER BRACKETS
VALEO/MAGNETI

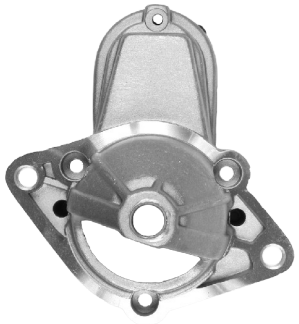

AS SBR3001

ORIGINAL	CARGO
594579	231238

for S3003

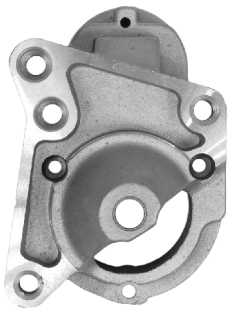

AS SBR3002

ORIGINAL	CARGO
594569	231537

for S3004

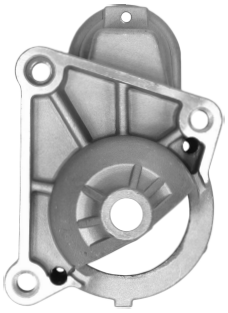

AS SBR3003

ORIGINAL	CARGO
594488	233317

for S3001

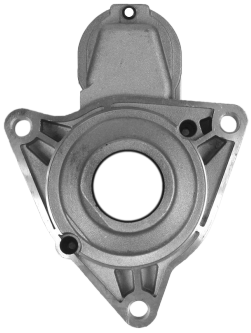

AS SBR3004

ORIGINAL	CARGO
594502	234391

for S3026

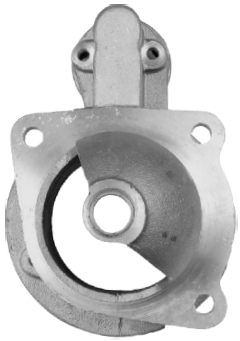

AS SBR4001

ORIGINAL	CARGO
54244390	138434

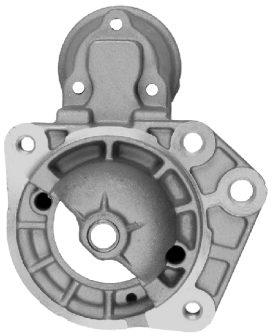

AS SBR4002

ORIGINAL	CARGO
83225739	138561

STARTER BRACKETS
DENSO / OTHER

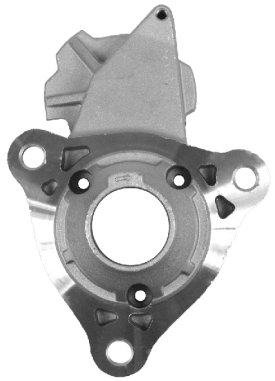

AS SBR6001

FOR CS1292 / S6005

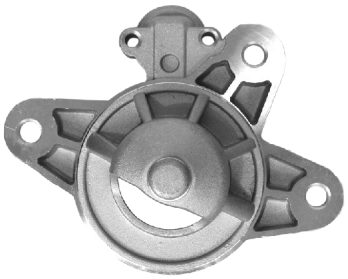

AS SBR9001

FOR CS977 / S9001 **CARGO 230742**

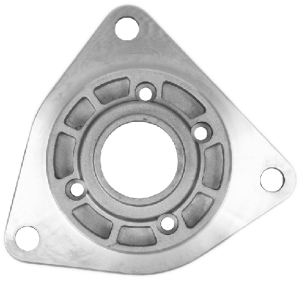

AS SBR9002

FOR S9022

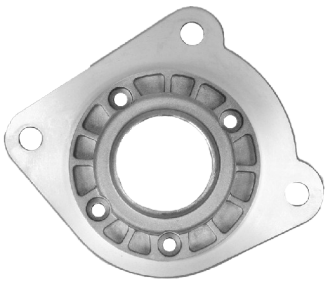

AS SBR9003

FOR S9024

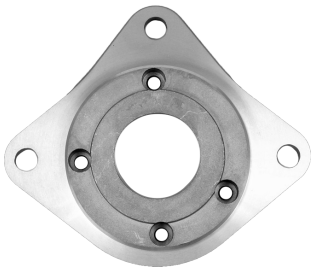

AS SBR9004

FOR S9023

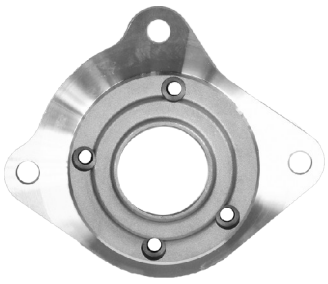

SBR9005

FOR S9021

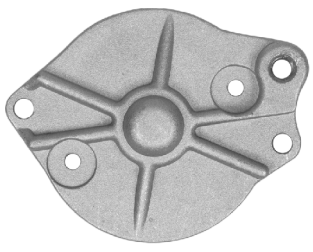

AS SBR9006

CARGO 235114

BRUSH HOLDERS
BOSCH

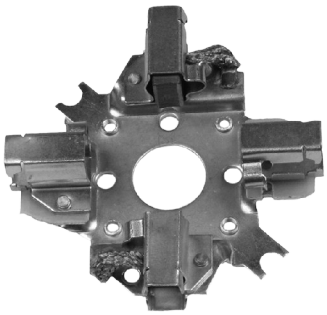

AS SBH0001

ORIGINAL	CARGO
2004336027	131184

Matching Brush set: **BSX97**

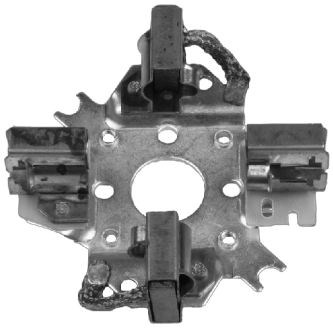

AS SBH0002

ORIGINAL	CARGO
2004336031	131185

Matching Brush set: **BSX135-145**

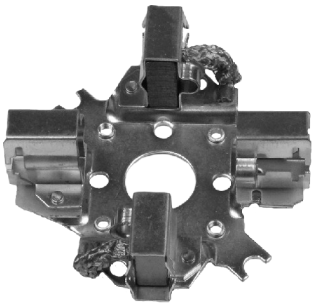

AS SBH0003

ORIGINAL	CARGO
2004336028	132303

Matching Brush set: **BSX134-144**

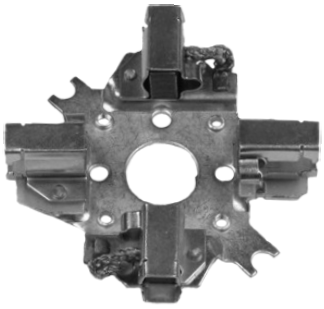

AS SBH0004

ORIGINAL	CARGO
2004336041	132306

Matching Brush set: **BSX137-143**

AS SBH0005

ORIGINAL	CARGO
1004336900	134103

Matching Brush set: **9001320110**

AS SBH0006

ORIGINAL	CARGO
1004336901	134104

Matching Brush set: **BSX149**

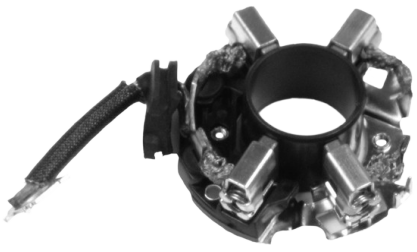

AS SBH0007

ORIGINAL	CARGO
1004336907	134658

Matching Brush set: **9001320113**

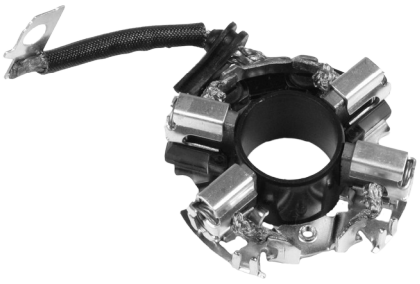

AS SBH0008

ORIGINAL	CARGO
1004336906	134659

Matching Brush set: **9001320110**

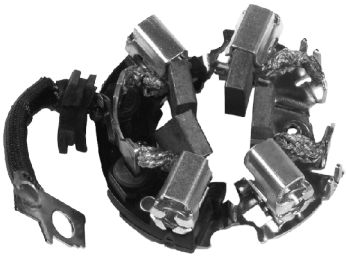

AS SBH0009

ORIGINAL	CARGO
1004336909	134660

Matching Brush set: **9001320110**

BRUSH HOLDERS
BOSCH

AS SBH0010

ORIGINAL **CARGO**
1004336218 **134661**

Matching Brush set: **9003334328**

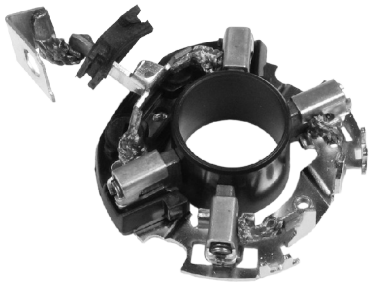

AS SBH0011

ORIGINAL **CARGO**
1004336915 **134868**

Matching Brush set: **9001320118**

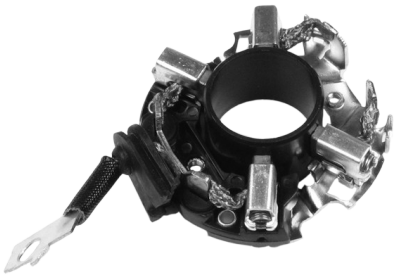

AS SBH0012

ORIGINAL **CARGO**
1004336951 **135015**

Matching Brush set: **9001320118**

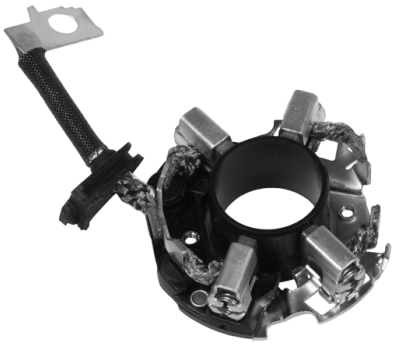

AS SBH0013

ORIGINAL **CARGO**
1004336911 **135235**

Matching Brush set: **9001320113**
ACW

AS SBH0014

ORIGINAL **CARGO**
1004336908 **137703**

Matching Brush set: **9001320110**

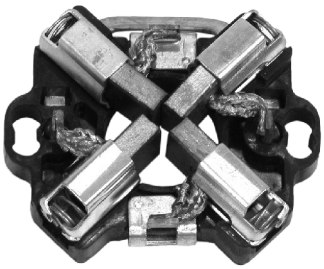

AS SBH0015

ORIGINAL **CARGO**
9003334158 **138424**

Matching Brush set: **9003334328**
ACW

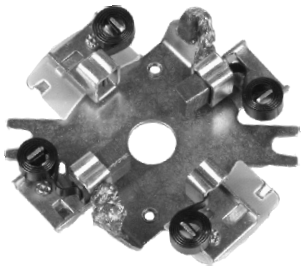

AS SBH0016

ORIGINAL **CARGO**
1004336025 **130685**

Matching Brush set: **BS75/0**

AS SBH0017

ORIGINAL **CARGO**
6033AD0380 **139698**

Matching Brush set: **BSX190-191**

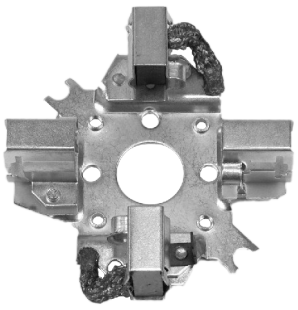

AS SBH0018

ORIGINAL **CARGO**
2004336085 **231084**

Matching Brush set: **BSX170-171**

BRUSH HOLDERS
BOSCH

AS SBH0019

ORIGINAL **CARGO**
2005855199 **136559**

AS SBH0020

ORIGINAL **CARGO**
1004336415 **136557**

Matching Brush set: **9001320118**

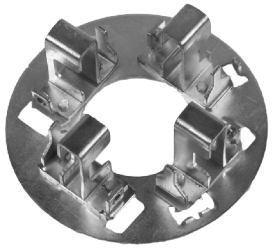

AS SBH0021

ORIGINAL **CARGO**
2004336078 **230843**

Matching Brush set: **BSX177**

AS SBH0022

ORIGINAL **CARGO**
1004336940 **138201**

Matching Brush set: **BSX166**

AS SBH0023

ORIGINAL **CARGO**
6033AD0014 **231648**

Matching Brush set: **BSX192-193**

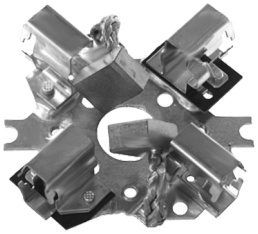

AS SBH0024

ORIGINAL **CARGO**
2004336086 **234788**

Matching Brush set: **BSX170-171**

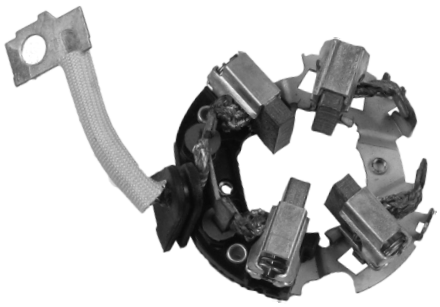

AS SBH0025

ORIGINAL **CARGO**
1004336518 **237670**
1004336894

Matching Brush set: **BSX157-158**

AS SBH0026

ORIGINAL **CARGO**
6033AD5128 **239096**

Matching Brush set: **BSX206-207**

AS SBH0027

ORIGINAL
1004336695
1004336674

BRUSH HOLDERS
BOSCH

AS SBH0028

ORIGINAL	CARGO
1004336392	232183

Matching Brush set: **BSX175-176**

AS SBH0029

ORIGINAL	CARGO
1004336526	232700

AS SBH0030

ORIGINAL	CARGO
1004336368	233565

AS SBH0031

ORIGINAL	CARGO
1004336411	234475

Matching Brush set: **BSX159-160**

AS SBH0032

ORIGINAL	CARGO
1004336619	234896

Matching Brush set: **BSX157-158**

AS SBH0033

ORIGINAL	CARGO
1004336506	235531

AS SBH0034

ORIGINAL	CARGO
F000AL1483	235724 136418

Matching Brush set: **BSX175-176**

AS SBH0035

ORIGINAL	CARGO
1004336574	235741

AS SBH0036

ORIGINAL	CARGO
1004336536	237366

Matching Brush set: **BSX159-160**

BRUSH HOLDERS
DELCO

AS SBH1001

ORIGINAL **CARGO**
1988121 **131352**

Matching Brush set: **RX134, RX134H**

AS SBH1002

ORIGINAL **CARGO**
1979387 **131346**

Matching Brush set: **RX122, RX122H**

AS SBH1003

ORIGINAL **CARGO**
10476006 **230391**

Matching Brush set: **SB1005**

AS SBH1004

CARGO
230396

Matching Brush set: **10499524**

AS SBH1005

ORIGINAL **Repl. DAEWOO**
10475107

BRUSH HOLDERS
HITACHI

AS SBH2001

ORIGINAL	CARGO
2130-13022	133730

Matching Brush set: **SB2006, JASX74-75**

AS SBH2002

ORIGINAL	CARGO
2114-73105	137121

Matching Brush set: **SB2009, JASX54-55**

AS SBH2003

ORIGINAL	CARGO
2114-83105	139166

Matching Brush set: **JASX59-60**

AS SBH2004

ORIGINAL	CARGO
2114-29007	132090

Matching Brush set: **JASX56-3**

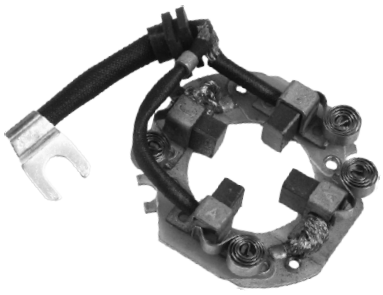

AS SBH2005

ORIGINAL	CARGO
2114-23104	137750

Matching Brush set: **SB2008**

BRUSH HOLDERS
VALEO

AS SBH3001

ORIGINAL **CARGO**
594072 **133646**

Matching Brush set: **PSX146-147**

AS SBH3002

ORIGINAL **CARGO**
594070 **133647**

Matching Brush set: **PSX144-145**

AS SBH3003

ORIGINAL **CARGO**
594290 **139224**

Matching Brush set: **PSX155**

AS SBH3004

CARGO
132812

Matching Brush set: **PSX130**

AS SBH3005

CARGO
132995

Matching Brush set: **PSX133**

AS SBH3006

ORIGINAL **CARGO**
184630 **138642**

Matching Brush set: **PSX112**

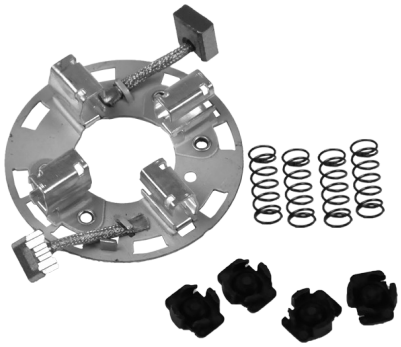

AS SBH3007

for D7RS131

Matching Brush set: **PSX142-144**

AS SBH3008

for D7R2 **CARGO**
136763

Matching Brush set: **PSX158**

BRUSH HOLDERS
MAGNETI MARELLI / LUCAS

AS SBH4001

ORIGINAL	CARGO
83226336	139627

Matching Brush set: **JSX31-32**

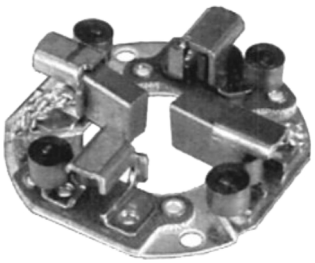

AS SBH4002

ORIGINAL	CARGO
83225886	138535

Matching Brush set: **JSX43-45-57**

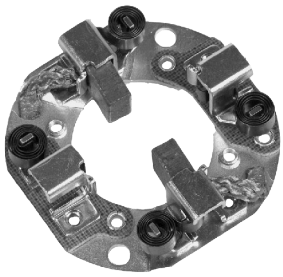

AS SBH4003

ORIGINAL	CARGO
83221241	136204

Matching Brush set: **JSX35-37**

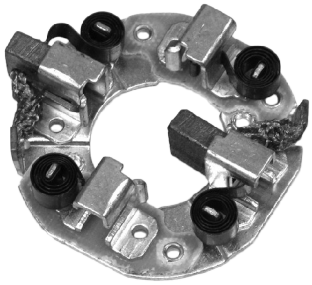

AS SBH4004

ORIGINAL		CARGO
83220461	83226683	135565
83222681	83227131	

Matching Brush set: **JSX33-34**

BRUSH HOLDERS
MITSUBISHI

AS SBH5001

ORIGINAL **CARGO**
M649T09471 **133341**

Matching Brush set: **SB5009**

AS SBH5002

ORIGINAL **CARGO**
M649T06971 **133342**

Matching Brush set: **SB5004**

AS SBH5003

ORIGINAL **CARGO**
M321X04471 **137929**

Matching Brush set: **SB5006, JASX44-28**

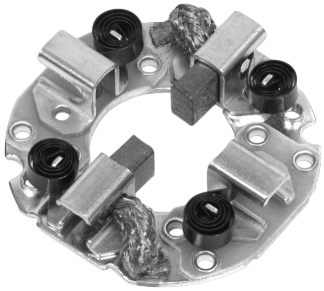

AS SBH5004

ORIGINAL **CARGO**
M649T20471 **138963**
M649X20471
ME701467

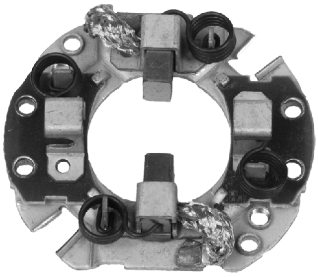

AS SBH5005

ORIGINAL **CARGO**
M649T04471 **133886**

Matching Brush set: **SB5007, JASX69-70**

AS SBH5006

ORIGINAL **CARGO**
M649T05072 **132475**

Matching Brush set: **SB5002, JASX98-99**

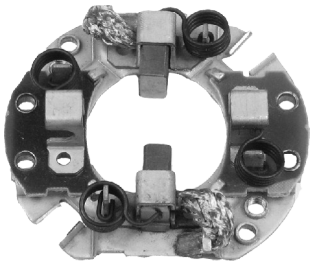

AS SBH5007

ORIGINAL **CARGO**
M649T01371 **135467**

Matching Brush set: **SB5001, JASX82-83**
with two brushes

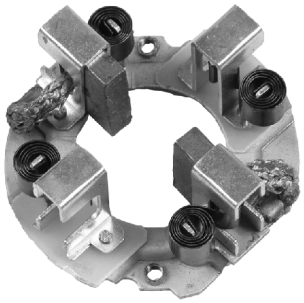

AS SBH5008

CARGO
236441

Matching Brush set: **SB5010**
for M9T60471

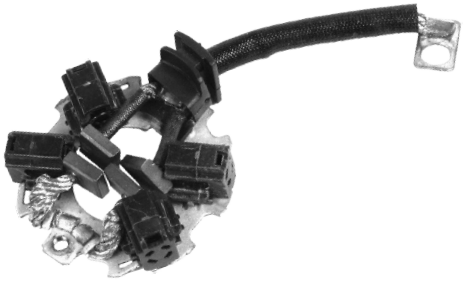

AS SBH5009

for M1T85781

Matching Brush set: **SB5012**

BRUSH HOLDERS
NIPPODENSO

AS SBH6001

ORIGINAL **CARGO**
028510-0880 **138672**

Matching Brush set: **SB6008**

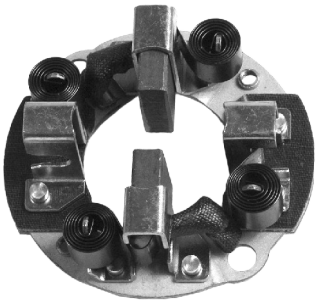

AS SBH6002

ORIGINAL **CARGO**
028510-0500 **132874**
028510-5390

Matching Brush set: **SB6006**

BRUSH HOLDERS
OTHER

AS SBH9001

ORIGINAL **CARGO**
E90Z11061C **136635**

Matching Brush set: **SB9004**

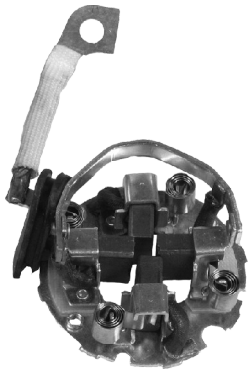

AS SBH9002

ORIGINAL **CARGO**
F7RU1143BA **230741**

Matching Brush set: **SB9001, FX75**

AS SBH9003

FOR PG260NA

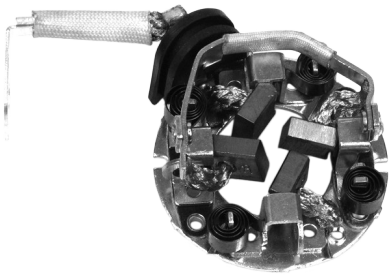

AS SBH9004

CARGO
234062

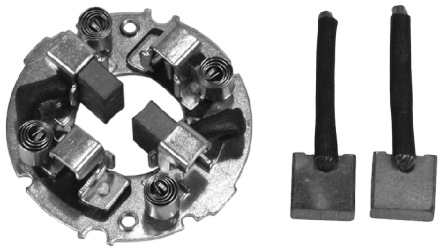

AS SBH9005

ORIGINAL **CARGO**
1C3U-11424-AA **235065**
1C3U-11424-AA
Matching Brush set: **SB9001, FX75**

AS SBH9006

ORIGINAL **CARGO**
497605 **230397**
691293
Matching Brush set: **497608**

STARTER BRUSH SETS

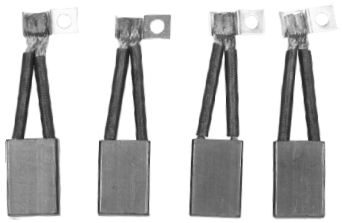

AS BSX34

ORIGINAL 2007014021
CARGO BSX34/4
Size: 9 x 20 x 28.5 mm
24 V

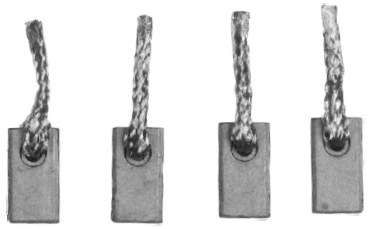

AS BSX75

ORIGINAL 2007014026
CARGO BSX75/4
Size: 7 x 10 x 18 mm
12 V

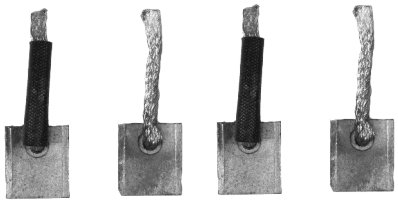

AS BSX76

ORIGINAL 1007014119
CARGO BSX104/4
Size: 7 x 16 x 18 mm
12 V

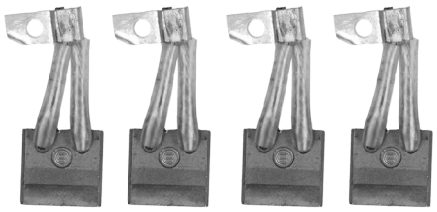

AS BSX96

ORIGINAL 2007014052
CARGO BSX96/4
Size: 10 x 25 x 23 mm
12 V

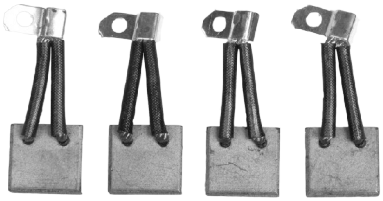

AS BSX100

ORIGINAL 2007014049
CARGO BSX100/4
Size: 8 x 25 x 23 mm
24 V

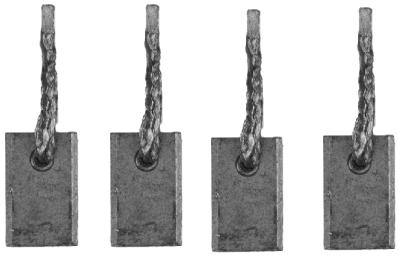

AS BSX102

ORIGINAL 2007014053
CARGO BSX102/4
Size: 9 x 16 x 25.5 mm
12 V

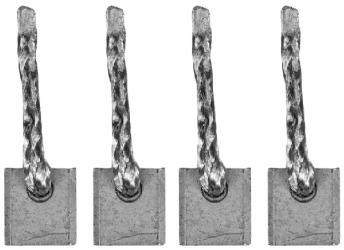

AS BSX139

ORIGINAL 2007014065
CARGO BSX139/4
Size: 9 x 16 x 17 mm
12 V

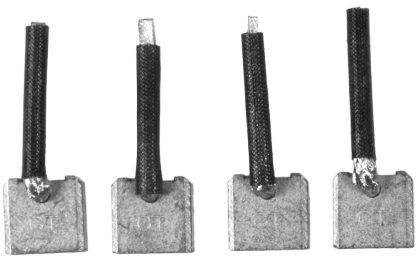

AS BSX140

ORIGINAL 1007014138
CARGO BSX140/4
Size: 7 x 16 x 15 mm
12 V

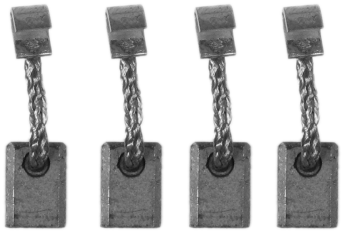

AS BSX146

ORIGINAL 1007014137
CARGO BSX146/4
Size: 7 x 10 x 14 mm
12 V

STARTER BRUSH SETS

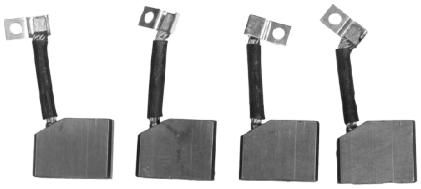

AS BSX148

ORIGINAL 2007014070
CARGO BSX148/4
Size: 12 x 36 x 27 mm
24 V

AS BSX149

ORIGINAL 1007014105
CARGO BSX149/4
Size: 7 x 10 x 14 mm
12 V

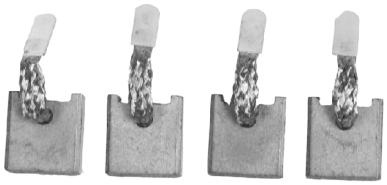

AS BSX151

ORIGINAL 1007014143
CARGO BSX151S/4
Size: 7.5 x 18 x 19 mm
12 V

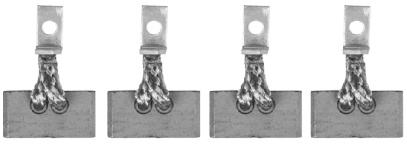

AS BSX177

ORIGINAL 2007014082
CARGO BSX177/4
Size: 9 x 36 x 18 mm
24 V

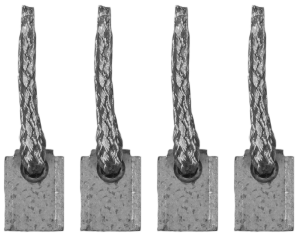

AS BSX196

ORIGINAL 1004320158
Size: 5 x 8.5 x 11.6 mm
12 V

AS BSX135-145

ORIGINAL 2007014063
CARGO BSX135-145/4
Size: 8 x 25 x 17 mm
24 V

AS BSX134-144

ORIGINAL 2007014062
CARGO BSX134-144/4
Size: 10 x 25 x 17 mm
12 V

AS BSX137-143

ORIGINAL 2007014068
CARGO BSX137-143/4
Size: 9 x 16 x 17 mm
12 V

AS BSX138-142

ORIGINAL 2007014069
CARGO BSX138-142/4
Size: 9 x 16 x 15.5 mm
24 V

STARTER BRUSH SETS

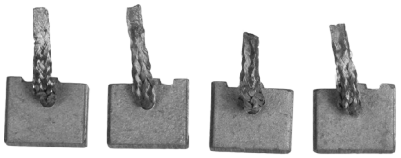

AS BSX157-158

ORIGINAL 1004320110

Size: 6 x 18 x 14 mm
12 V

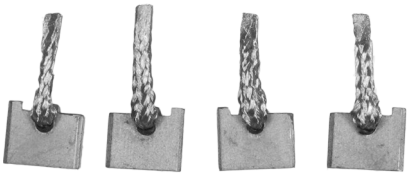

AS BSX159-160

ORIGINAL 1004320113
CARGO 156-160/4
Size: 5 x 16 x 13 mm
12 V

AS BSX172-173

ORIGINAL 2007014079
CARGO BSX172-173/4
Size: 12 x 36 x 19 mm
24 V

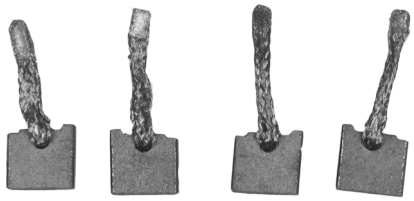

AS BSX175-176

ORIGINAL 1007010077

Size: 5 x 12 x 10.9/11.6 mm
12 V

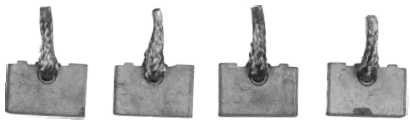

AS BSX190-191

ORIGINAL 9003334359

Size: 6.4 x 25 x 17 mm
24 V

AS BSX198-199

ORIGINAL 2004336064

Size: 8 x 25 x 13 mm
24 V

AS BSX170-171

ORIGINAL 0011511814
CARGO BSX170-171(4)
Size: 10 x 25 x 15 mm
24 V

STARTER BRUSH SETS

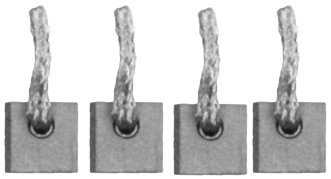

AS SB1001

CARGO 140755
IKA RX911
Size: 5.5 x 15 x 14 mm
12 V

AS SB1002

CARGO 140813
IKA RX120/0 (2)
Size: 6 x 16 x 14 mm
12 V

AS SB1003

CARGO 140814
IKA RX120/0 (3)
Size: 6 x 16 x 14 mm
12 V

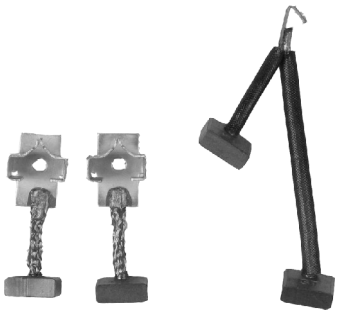

AS SB1004

CARGO 140815
IKA RX120/0 (4)
Size: 6 x 16 x 14 mm
12 V

AS SB1005

CARGO 141045

Size: 5 x 16 x 11 mm
12 V

AS RX70 (4)

Size: 9.5 x 19.05 x 19 mm
24 V

STARTER BRUSH SETS

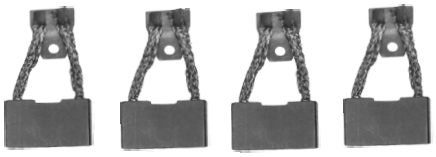

AS RX122

Size: 9.53 x 38.1 x 21 mm
12 V

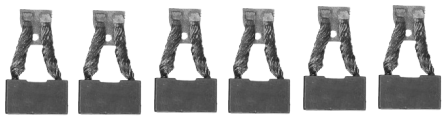

AS RX124

Size: 7.94 x 38.1 x 20.56 mm
12 V

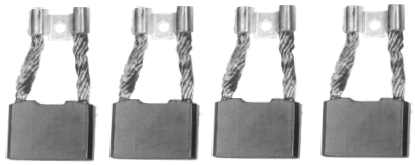

AS RX134

Size: 10.5 x 36.51 x 24.21 mm
12 V

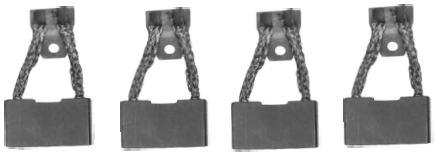

AS RX122 H

Size: 9.53 x 38.1 x 21 mm
24 V

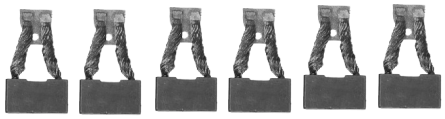

AS RX124 H

Size: 7.94 x 38.1 x 20.56 mm
24 V

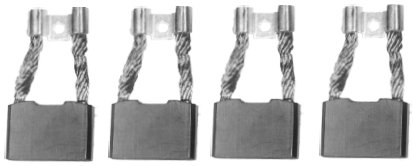

AS RX134 H

Size: 10.5 x 36.51 x 24.21 mm
24 V

AS RX457-458

Size: 7.9 x 24.8 x 19.5 mm
12 V

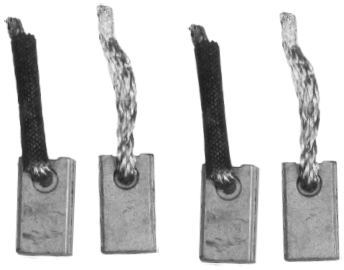

AS SB2001

CARGO **140334**
IKA **JASX57-58**
Size: 7 x 11 x 18 mm
12 V

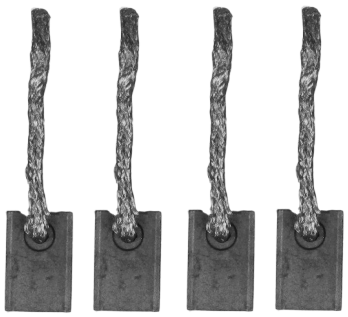

AS SB2002

CARGO **140336**
IKA **JASX66-67**
Size: 7 x 11 x16 mm
12 V

STARTER BRUSH SETS

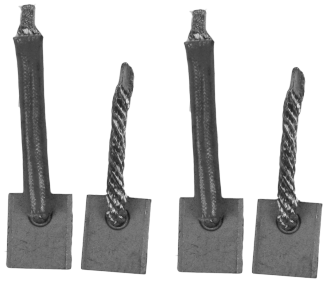

AS SB2003

CARGO 140338
IKA JASX80-81
Size: 7 x 14 x 16 mm
12 V

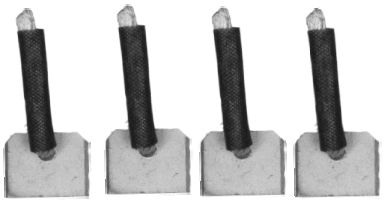

AS SB2004

CARGO 140378
IKA JASX36-37
Size: 8 x 25 x 18 mm
12 V

AS SB2005

CARGO 140379
IKA JASX74-75
Size: 7 x 19 x 15.5 mm
12 V

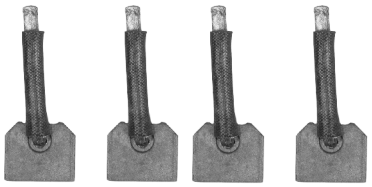

AS SB2006

CARGO 140567
IKA JASX74
Size: 7 x 19 x 16 mm
12 V

AS SB2007

CARGO 140785
IKA JASX50-51
Size: 7 x 11 x 16 mm
12 V

AS SB2008

CARGO 140786
IKA JASX50-51
Size: 7 x 11 x 16 mm
12 V

AS SB2009

CARGO 140852
IKA JASX54-55
Size: 4.5 x 14 x 17 mm
12 V

AS SB2010

CARGO 140953
IKA JASX49-61
Size: 4.5 x 14 x 17 mm
12 V

AS SB2011

CARGO 140933
Size: 7 x 11 x 16 mm
12 V

STARTER BRUSH SETS

AS SB2012

CARGO 140934
HITACHI 2114-83121
Size: 7 x 11 x 16 mm
12 V

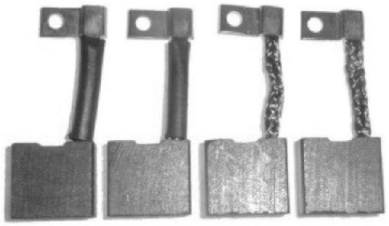

AS SB2013

CARGO 140340
IKA JASX15-6 (4)
Size: 6 x 16 x 14.5 mm
12 V

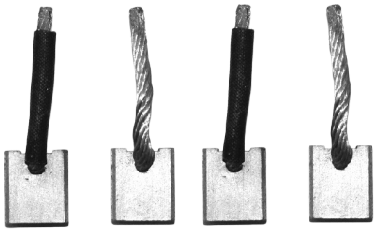

AS SB2014

CARGO 140595
IKA JASX92-93
Size: 8.9 x 19.4 x 22.4 mm
12 V

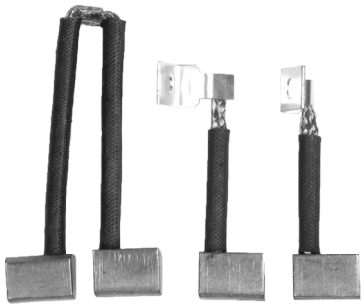

AS PSX129

CARGO PSX129/2+1P
Size: 10.6/6.1 x 10.3 x 15 mm
12 V

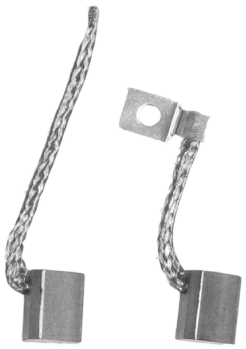

AS PSX133

CARGO PSX133/2
Size: 13.9/6.9 x 12 x 15 mm
12 V

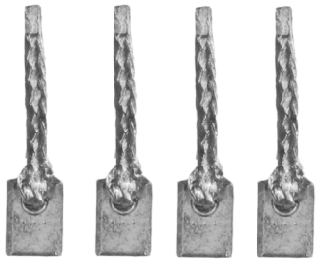

AS PSX155

CARGO PSX1554
Size: 6.4 x 8 x 11 mm
12 V

AS PSX158

Size: 7 x 14 x 14 mm
12 V

AS PSX115-116

CARGO PSX115-116/2
Size: 7 x 18 x 14 mm
12 V

AS PSX119-120

CARGO PSX119-120/2
Size: 7 x 15 x 14 mm
12 V

STARTER BRUSH SETS

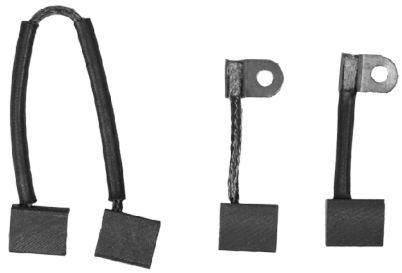

AS PSX122-123-124

CARGO **PSX122-123-124**
Size: 9.7/4.2 x 12.4 x 15 mm
12 V

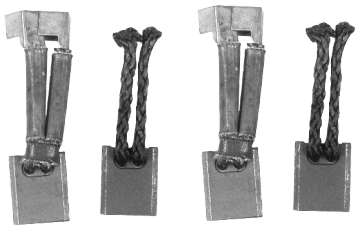

AS PSX140-141

Size: 9 x 18 x 22 mm
12 V

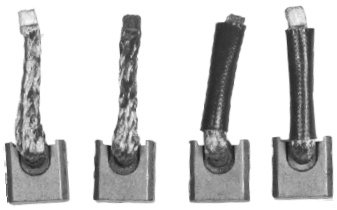

AS PSX142-143

Size: 7 x 14 x 13.8 mm
12 V

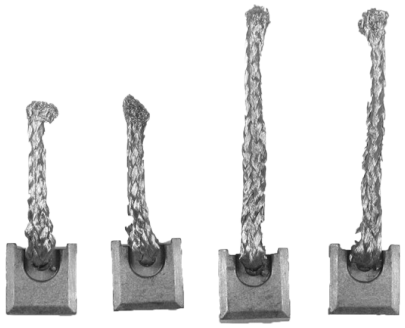

AS PSX142-145

IKA **0 1754 1**
Size: 7 x 14 x 13.7 mm
12 V

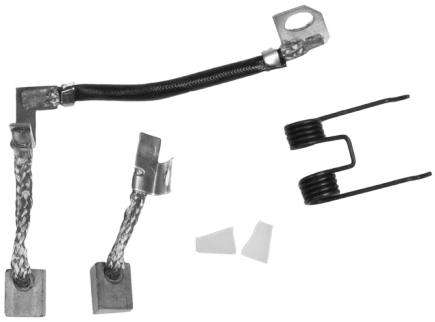

AS PSX146-147

CARGO **PSX146-147K**
Size: 4.7/9 x 11 x 14 mm
12 V

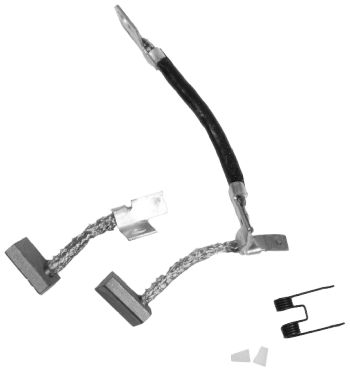

AS PSX148-149

CARGO **PSX148-149K**
Size: 4.5/9 x 11 x 18 mm
12 V
In offer also: PSX148-149(H) - with brush holder

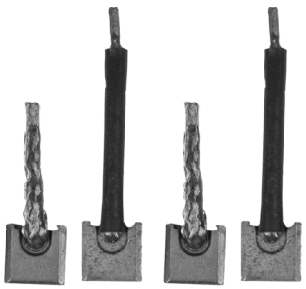

AS PSX142-144

Size: 7 x 14 x 13.8 mm
12 V

AS PSX169-170

CARGO **PSX169-170 4**
Size: 6.4 x 10 x 15.5 mm
12 V

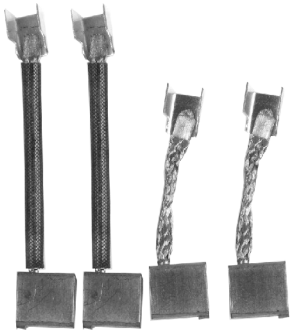

AS USX91-92

CARGO **USX91-92/2**
Size: 13 x 11.5 x 15 mm
12 V

STARTER BRUSH SETS

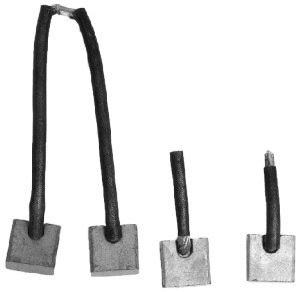

AS JSX21-22

MAGNETI **74881151**
Size: 6 x 13 x 17.5 mm
12 V

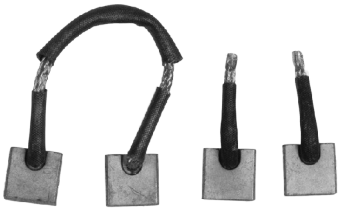

AS JSX31-32

Size: 8 x 19 x 18 mm
12 V

AS JSX33-34

Size: 6 x 15 x 16.7 mm
12 V

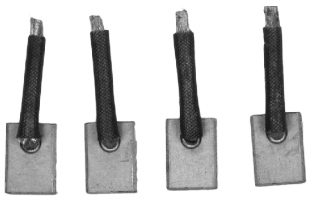

AS JSX35-36

Size: 7 x 13 x 17.5 mm
12 V

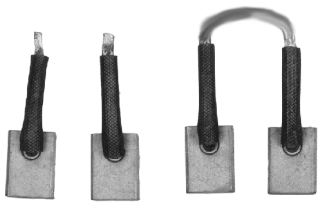

AS JSX35-37

CARGO **JSX35-37**

Size: 7 x 13 x 17.5 mm
12 V

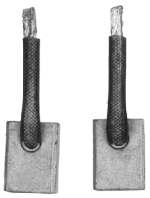

AS JSX38-41

Size: 7 x 13 x 17.5 mm
12 V

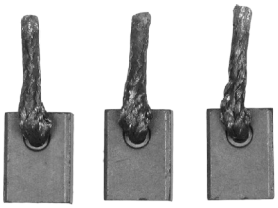

AS JSX38-39-40

Size: 7 x 13 x 17.5 mm
12 V

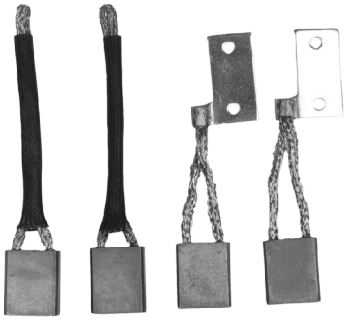

AS LASX15-16

CARGO **LASX15-16**

Size: 7.9 x 19.05 x 22.2 mm
12 V

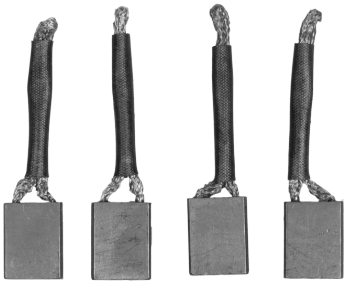

AS LASX36

CARGO **LASX36**

Size: 9 x 20 x 24.5 mm
12 V

STARTER BRUSH SETS

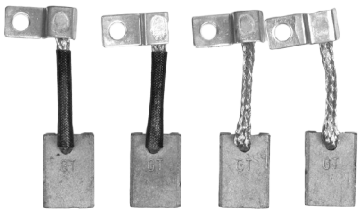

AS MASX17-18

CARGO **MASX17-18**

Size: 9 x 16 x 23 mm
12 V

AS SB4001

CARGO **140480**
IKA **LASX74-79-80**
Size: 7 x 13.7 x 11.5 mm
12 V

AS SB4002

CARGO **140481**
IKA **LASX77-78-74**
Size: 7.0 x 13.7 x 11.5 mm
12 V

AS SB4003

CARGO **140897**
IKA **LASX86-79-80**
Size: 7.0 x 13.7 x 11.5 mm
12 V

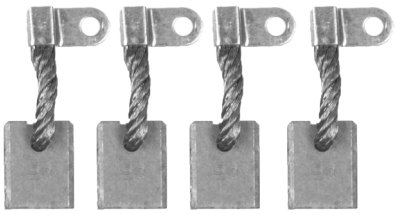

AS JSX13

CARGO **JSX134**

Size: 7 x 16 x 20 mm
12 V

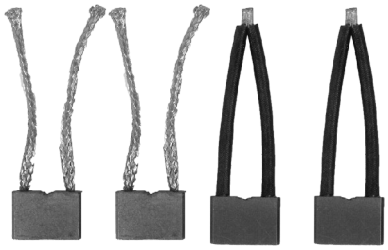

AS PSX83-84

CARGO **PSX83-844**
Size: 10 x 25 x 17 mm
24 V

STARTER BRUSH SETS

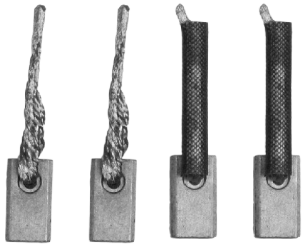

AS SB5001

CARGO 140349
IKA JASX82-83
Size: 6.8 x 10 x 17 mm
12 V

AS SB5002

CARGO 140387
IKA JASX98-99
Size: 6.8 x 18 x 18 mm
12 V

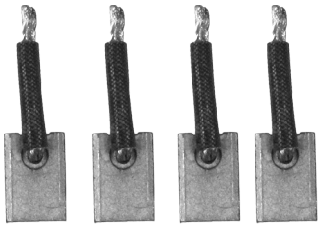

AS SB5003

CARGO 141037
Size: 4.5 x 12 x 16.5 mm
12 V

AS SB5004

CARGO 140560
IKA JASX42-43
Size: 4.5 x 18 x 17.5 mm
12 V

AS SB5005

CARGO 140561
IKA JASX40-41
Size: 4.5 x 12 x 17.5 mm
12 V

AS SB5006

CARGO 140921
IKA JASX44-28
Size: 4.5 x 12 x 12.5 mm
12 V

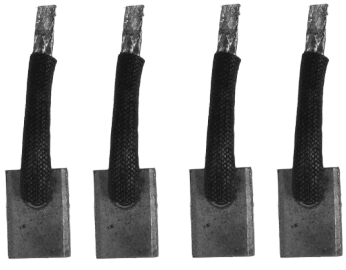

AS SB5007

CARGO 140347
IKA JASX69-70 (4)
Size: 6.8 x 12 x 17 mm
12 V

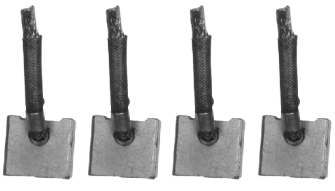

AS SB5008

CARGO 140348
IKA JASX38
Size: 8 x 20 x 18 mm
24 V

AS SB5009

CARGO 140559
IKA JASX40-41
Size: 4.5 x 12 x 17.5 mm
12 V

STARTER BRUSH SETS

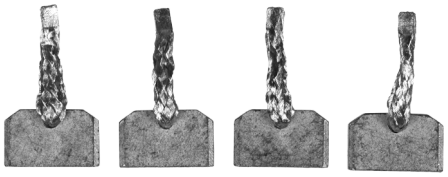

AS SB5010

CARGO **142006**

Size: 8 x 30 x 18 mm
24 V

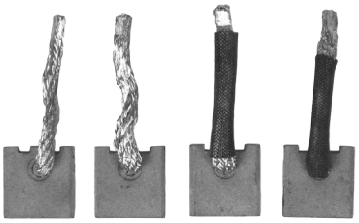

AS SB5011

CARGO **140386**
IKA **JASX47-48**
Size: 6.5 x 19 x 19 mm
12 V

AS SB5012

CARGO **141259**

Size: 4.5 x 12 x 12.5 mm
12 V

STARTER BRUSH SETS

AS SB6001

CARGO 140362
IKA JASX84
Size: 7 x 16 x 14 mm
12 V

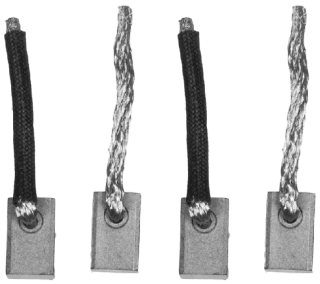

AS SB6002

CARGO 140363
IKA JASX85
Size: 6.5 x 10 x 16 mm
12 V

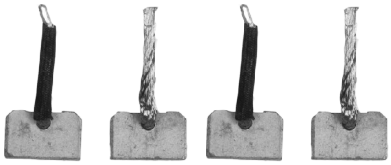

AS SB6003

CARGO 140364
IKA JASX77-78
Size: 8 x 25 x 15 mm
12 V

AS SB6004

CARGO 140396
IKA JASX89
Size: 7 x 16 x 13.5 mm
12 V

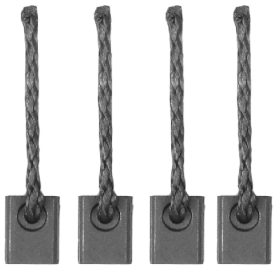

AS SB6005

CARGO 140602
IKA JASX39
Size: 6.5 x 8 x 10 mm
12 V

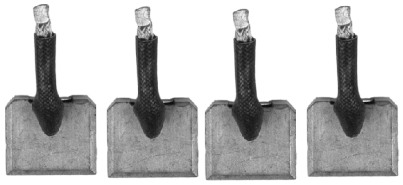

AS SB6006

CARGO 140361
IKA JASX88
Size: 8 x 25 x 21 mm
12 V

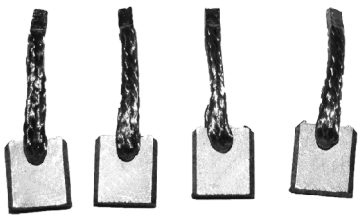

AS SB6007

CARGO 140740
IKA JASX52
Size: 6.4 x 12.9 x 14.2 mm
12 V

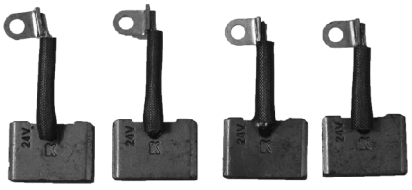

AS SB6008

CARGO 140963
IKA JASX10-11
Size: 10 x 30 x 21 mm
12 V / 24 V

STARTER BRUSH SETS

AS SB9001

CARGO 140955
IKA FX75
Size: 8.22 x 18.8 x 17.7 mm
12 V

AS SB9002

ORIGINAL 16.905.695
IKA IKSX10-11
Size: 8 x 25 x 23 mm
24 V

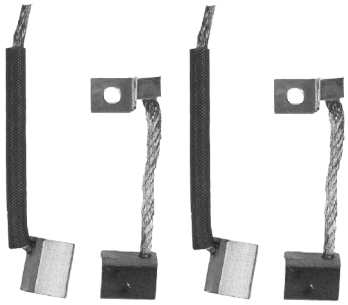

AS SB9003

ORIGINAL 16.905.439
IKA IKSX2-3
Size: 7 x 12 x 15 mm
12 V

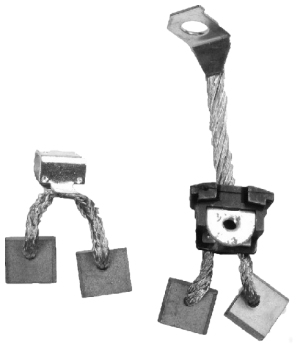

AS SB9004

CARGO 140845
IKA FX70-71
Size: 4.5 x 15.9 x 14 mm
12 V

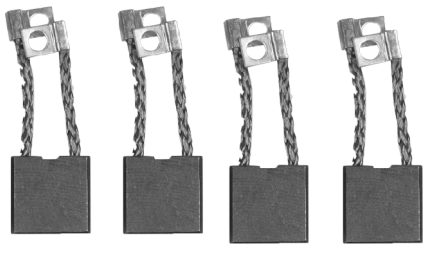

AS PLSX4

CARGO PLSX4/4
IKA PLSX4
Size: 8.8 x 26.6 x 26 mm
12 V

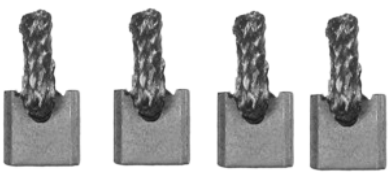

AS PLSX5

CARGO PLSX5/4
IKA PLSX5
Size: 6 x 12.5 x 12.5 mm
12 V

STARTER DRIVES
BOSCH

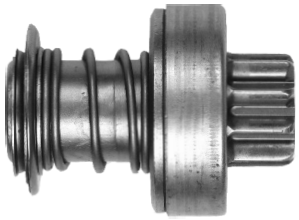

AS SD0001

ORIGINAL	CARGO		
1006209404	130396	Tooth:	9
1006209414		Splines:	10
9001336324		Length:	64.5 mm
		O.D.	25.8 mm
		Shaft:	12 mm

AS SD0002

ORIGINAL	CARGO		
1006209162	130404	Tooth:	9
1006209424		Splines:	10
1006209431		Length:	63 mm
		O.D.	25.82 mm
		Shaft:	11 mm ACW

AS SD0003

ORIGINAL	CARGO		
2006209331	130409	Tooth:	9
2006209241		Splines:	10
		Length:	73 mm
		O.D.	25.8 mm
		Shaft:	12 mm

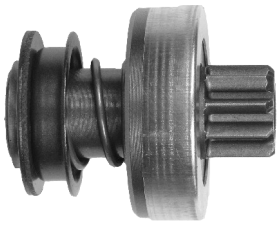

AS SD0004

ORIGINAL	CARGO		
2006209471	130414	Tooth:	9
2006209500		Splines:	10
		Length:	71.5 mm
		O.D.	25.8 mm
		Shaft:	12 mm

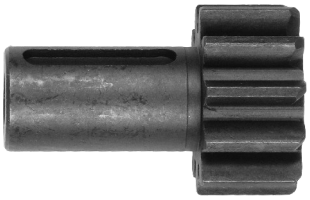

AS SD0005

ORIGINAL	CARGO		
2006382018	130418	Tooth:	11
2006382152		Splines:	
2006382156		Length:	61 mm
		O.D.	41 mm
		Shaft:	

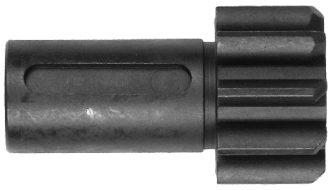

AS SD0006

ORIGINAL	CARGO		
2006382020	130419	Tooth:	9
2006382150		Splines:	
2006382176		Length:	61.2 mm
		O.D.	35 mm
		Shaft:	

AS SD0007

ORIGINAL	CARGO		
2006209478	130930	Tooth:	9
		Splines:	10
		Length:	73.5 mm
		O.D.	29.64 mm
		Shaft:	14 mm

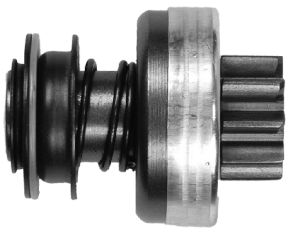

AS SD0008

ORIGINAL	CARGO		
2006209240	130931	Tooth:	9
2006209418		Splines:	10
2006209448		Length:	74 mm
		O.D.	34.8 mm
		Shaft:	14 mm

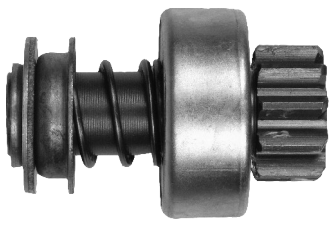

AS SD0009

ORIGINAL	CARGO		
2006209111	130932	Tooth:	10
2006209405		Splines:	10
2006209435		Length:	91 mm
		O.D.	40 mm
		Shaft:	14 mm

STARTER DRIVES
BOSCH

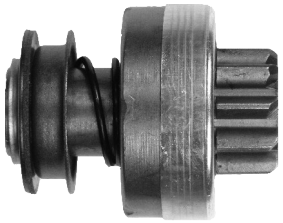

AS SD0010

ORIGINAL	CARGO
2006209470	130950

Tooth:	9
Splines:	10
Length:	73.5 mm
O.D.	34.8 mm
Shaft:	14 mm

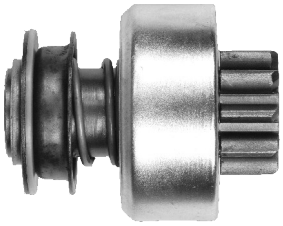

AS SD0011

ORIGINAL	CARGO
2006209449	131019
2006209476	
2006209485	

Tooth:	9
Splines:	10
Length:	73.5 mm
O.D.	34.8 mm
Shaft:	14 mm

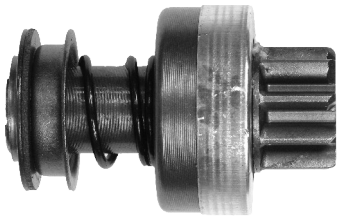

AS SD0012

ORIGINAL	CARGO
2006209492	131065
2006209530	
2006209536	

Tooth:	9
Splines:	10
Length:	91 mm
O.D.	34.8 mm
Shaft:	14 mm

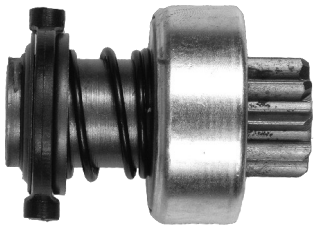

AS SD0013

ORIGINAL	CARGO
1006209500	131102

Tooth:	9
Splines:	10
Length:	64 mm
O.D.	25.8 mm
Shaft:	12 mm

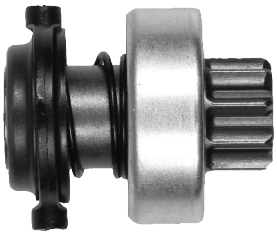

AS SD0014

ORIGINAL	CARGO
1006209693	131104
1006209503	
1006209504	
1006209506	

Tooth:	9
Splines:	10
Length:	59 mm
O.D.	25.8 mm
Shaft:	12 mm

AS SD0015

ORIGINAL	CARGO
2006382019	131107
2006382172	

Tooth:	11
Splines:	
Length:	61 mm
O.D.	41 mm
Shaft:	

AS SD0016

ORIGINAL	CARGO
1006209502	131150

Tooth:	9
Splines:	10
Length:	85 mm
O.D.	25.8 mm
Shaft:	12 mm ACW

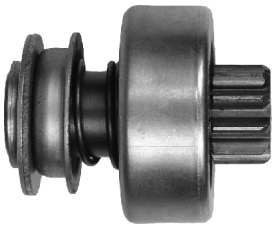

AS SD0017

ORIGINAL	CARGO
2006209431	131207

Tooth:	10
Splines:	10
Length:	74 mm
O.D.	27.2 mm
Shaft:	14 mm

AS SD0018

ORIGINAL	CARGO
2006209107	131267
2006209119	
2006209341	

Tooth:	9
Splines:	10
Length:	91 mm
O.D.	34.8 mm
Shaft:	14 mm

STARTER DRIVES
BOSCH

AS SD0019

ORIGINAL	CARGO
2006209408	131270
2006209423	

Tooth:	11
Splines:	10
Length:	91 mm
O.D.	41 mm
Shaft:	14 mm

AS SD0020

ORIGINAL	CARGO
2006209425	131271
2006209494	

Tooth:	11
Splines:	10
Length:	91 mm
O.D.	41 mm
Shaft:	14 mm

AS SD0021

ORIGINAL	CARGO
2006209466	131344

Tooth:	12
Splines:	10
Length:	74 mm
O.D.	46.3 mm
Shaft:	14 mm

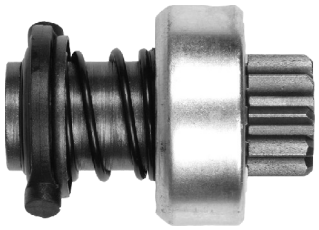

AS SD0022

ORIGINAL	CARGO
1006209501	131432
1006209517	

Tooth:	9
Splines:	10
Length:	64 mm
O.D.	25.8 mm
Shaft:	11 mm ACW

AS SD0023

ORIGINAL	CARGO
1006209510	131433
1006209516	
1006209566	

Tooth:	10
Splines:	10
Length:	58.5 mm
O.D.	26.82 mm
Shaft:	12 mm

AS SD0024

ORIGINAL	CARGO
1006209560	131434
1006209569	
1006209908	

Tooth:	10
Splines:	10
Length:	59 mm
O.D.	27 mm
Shaft:	12 mm

AS SD0025

ORIGINAL	CARGO
2006209498	131475
2006209533	
2006209539	

Tooth:	10
Splines:	10
Length:	91 mm
O.D.	37.8 mm
Shaft:	14 mm

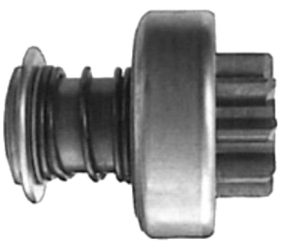

AS SD0026

ORIGINAL	CARGO
1006209436	131489

Tooth:	9
Splines:	10
Length:	64 mm
O.D.	34.8 mm
Shaft:	12 mm

AS SD0027

ORIGINAL	CARGO
2006209499	131597

Tooth:	10
Splines:	10
Length:	91 mm
O.D.	39 mm
Shaft:	14 mm

STARTER DRIVES
BOSCH

AS SD0028

ORIGINAL	CARGO
PR1030066	232632
2006202000	

Tooth:	12
Splines:	19
Length:	118 mm
O.D.	47 mm
Shaft:	19 mm

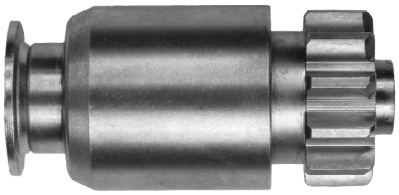

AS SD0029

ORIGINAL	CARGO
DR1909514	131768
DR1918079	
2006202001	

Tooth:	11
Splines:	19
Length:	120.4 mm
O.D.	56.5 mm
Shaft:	19 mm

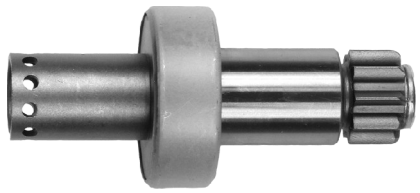

AS SD0030

ORIGINAL	CARGO
1006209280	131771
2006209450	

Tooth:	9
Splines:	10
Length:	108 mm
O.D.	26 mm
Shaft:	
	ACW

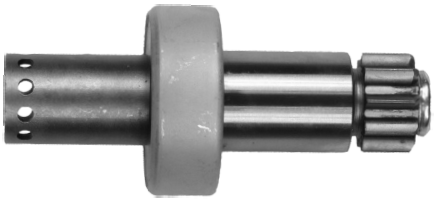

AS SD0031

ORIGINAL	CARGO
1006209451	131772

Tooth:	9
Splines:	10
Length:	108 mm
O.D.	26 mm
Shaft:	

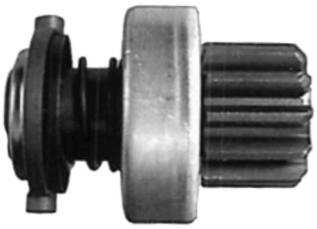

AS SD0032

ORIGINAL	CARGO
1006209520	131994

Tooth:	12
Splines:	10
Length:	73 mm
O.D.	35 mm
Shaft:	12 mm

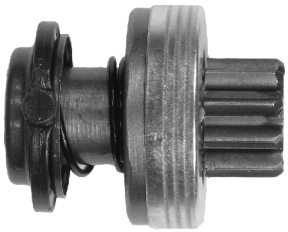

AS SD0033

ORIGINAL	CARGO
1006209523	131995
9003336291	

Tooth:	10
Splines:	10
Length:	64.5 mm
O.D.	27.5 mm
Shaft:	12 mm

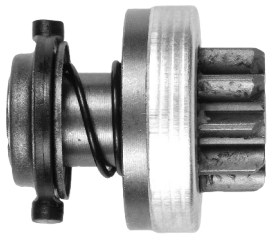

AS SD0034

ORIGINAL	CARGO
9002336219	131996
9003336283	

Tooth:	9
Splines:	10
Length:	62.5 mm
O.D.	35.5 mm
Shaft:	12 mm

AS SD0035

ORIGINAL	CARGO
9002336207	131997
9003336201	
9003336284	

Tooth:	10
Splines:	10
Length:	62 mm
O.D.	27.5 mm
Shaft:	12 mm

AS SD0036

ORIGINAL	CARGO
9001140317	131998

Tooth:	9
Splines:	10
Length:	62 mm
O.D.	25.8 mm
Shaft:	12 mm

STARTER DRIVES
BOSCH

AS SD0037

ORIGINAL	CARGO
2006209531	132000
2006209537	
2006209933	

Tooth:	11
Splines:	10
Length:	91 mm
O.D.	41 mm
Shaft:	14 mm

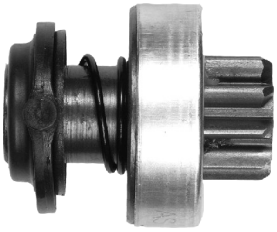

AS SD0038

ORIGINAL	CARGO
1006209524	132079
9003336280	

Tooth:	9
Splines:	10
Length:	62.5 mm
O.D.	29.64 mm
Shaft:	12 mm

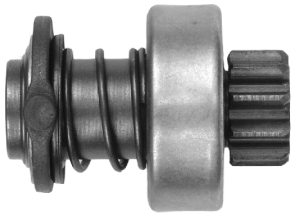

AS SD0039

ORIGINAL	CARGO
1006209519	132167

Tooth:	10
Splines:	10
Length:	64 mm
O.D.	26.82 mm
Shaft:	12 mm

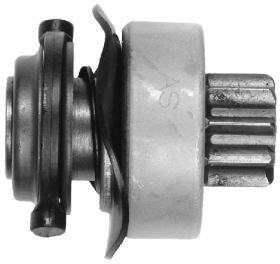

AS SD0040

ORIGINAL	CARGO
1006209522	132168

Tooth:	9
Splines:	10
Length:	58.5 mm
O.D.	25.8 mm
Shaft:	11 mm
	ACW

AS SD0041

ORIGINAL	CARGO
1006209532	132169

Tooth:	9
Splines:	10
Length:	80 mm
O.D.	25.8 mm
Shaft:	12 mm
	ACW

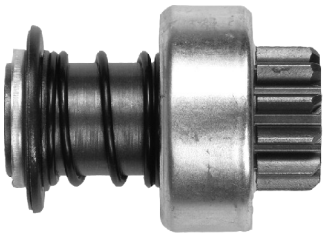

AS SD0042

ORIGINAL	CARGO
1006209425	132194
9001282324	
9001082749	

Tooth:	11
Splines:	10
Length:	64 mm
O.D.	30 mm
Shaft:	12 mm

AS SD0043

ORIGINAL	CARGO
1006209541	132204

Tooth:	11
Splines:	10
Length:	58.5 mm
O.D.	29.5 mm
Shaft:	12 mm

AS SD0044

ORIGINAL	CARGO
1006209538	132205
1006209539	

Tooth:	10
Splines:	10
Length:	59.5 mm
O.D.	27.94 mm
Shaft:	12 mm

AS SD0045

ORIGINAL	CARGO
1006209543	132216
1006209544	
1006209921	

Tooth:	9
Splines:	10
Length:	58.5 mm
O.D.	25.8 mm
Shaft:	12 mm
	ACW

STARTER DRIVES
BOSCH

AS SD0046

ORIGINAL	CARGO		
2006209422	132273	Tooth:	9
2006209436		Splines:	10
		Length:	91 mm
		O.D.	34.8 mm
		Shaft:	14 mm

AS SD0047

ORIGINAL	CARGO		
2006209427	132345	Tooth:	10
2006209457		Splines:	10
2006209931		Length:	91 mm
		O.D.	32 mm
		Shaft:	14 mm

AS SD0048

ORIGINAL	CARGO		
2006209086	132364	Tooth:	9
2006209095		Splines:	10
2006209215		Length:	90 mm
		O.D.	34.8 mm
		Shaft:	14 mm

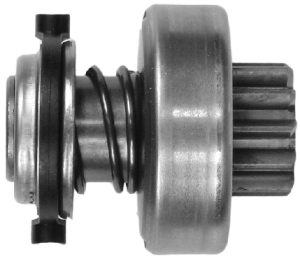

AS SD0049

ORIGINAL	CARGO		
9003336206	132388	Tooth:	11
		Splines:	10
		Length:	62 mm
		O.D.	29.5 mm
		Shaft:	12 mm

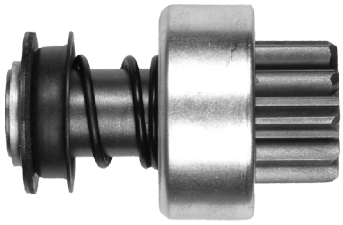

AS SD0050

ORIGINAL	CARGO		
2006209495	132702	Tooth:	10
2006209532		Splines:	10
		Length:	91 mm
		O.D.	40 mm
		Shaft:	14 mm

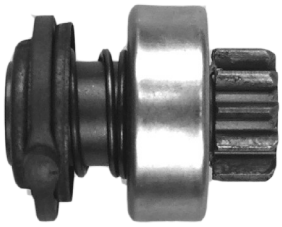

AS SD0051

ORIGINAL	CARGO		
1006209540	133230	Tooth:	11
		Splines:	10
		Length:	58.5 mm
		O.D.	30 mm
		Shaft:	12 mm

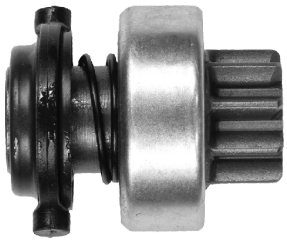

AS SD0052

ORIGINAL	CARGO		
1006209534	133362	Tooth:	9
1006209554		Splines:	10
		Length:	58.5 mm
		O.D.	29.64 mm
		Shaft:	12 mm

AS SD0053

ORIGINAL	CARGO		
2006209465	133596	Tooth:	11
		Splines:	10
		Length:	74 mm
		O.D.	35.8 mm
		Shaft:	14 mm

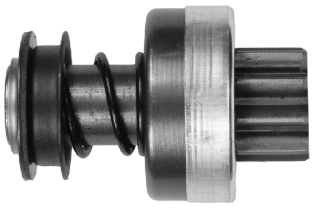

AS SD0054

ORIGINAL	CARGO		
2006209426	134282	Tooth:	9
		Splines:	10
		Length:	91 mm
		O.D.	34.8 mm
		Shaft:	14 mm

STARTER DRIVES
BOSCH

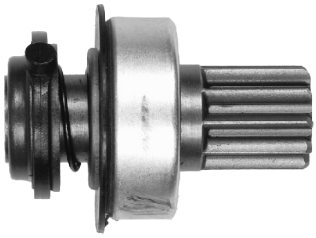

AS SD0055

ORIGINAL	CARGO		
1006209552	134371	Tooth:	10
1006209594		Splines:	10
1006209912		Length:	79.5 mm
		O.D.	27.94 mm
		Shaft:	12 mm
			ACW

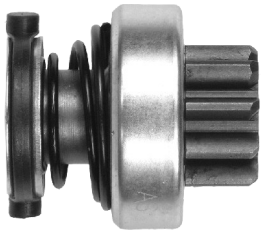

AS SD0056

ORIGINAL	CARGO		
9003336290	134434	Tooth:	9
		Splines:	10
		Length:	60 mm
		O.D.	35 mm
		Shaft:	12 mm

AS SD0057

ORIGINAL	CARGO		
1006209585	135085	Tooth:	9
1006209916		Splines:	10
		Length:	56 mm
		O.D.	25.8 mm
		Shaft:	12 mm
			ACW

AS SD0058

ORIGINAL	CARGO		
1006209579	135086	Tooth:	10
1006209917		Splines:	10
		Length:	77 mm
		O.D.	27.94 mm
		Shaft:	12 mm
			ACW

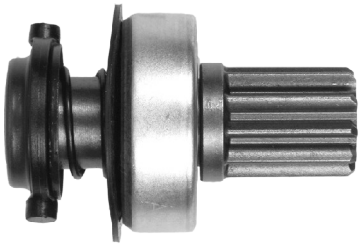

AS SD0059

ORIGINAL	CARGO		
9002336204	135116	Tooth:	10
		Splines:	10
		Length:	86 mm
		O.D.	27.5 mm
		Shaft:	12 mm
			ACW

AS SD0060

ORIGINAL	CARGO		
1006209578	135464	Tooth:	11
1006209923		Splines:	10
		Length:	58.5 mm
		O.D.	29.4 mm
		Shaft:	12 mm
			ACW

AS SD0061

ORIGINAL	CARGO		
1006209551	135714	Tooth:	10
		Splines:	10
		Length:	59 mm
		O.D.	33 mm
		Shaft:	12 mm
			ACW

AS SD0062

ORIGINAL	CARGO		
1006209581	135715	Tooth:	9
		Splines:	10
		Length:	59 mm
		O.D.	26 mm
		Shaft:	12 mm

AS SD0063

ORIGINAL	CARGO		
1006209584	135716	Tooth:	9
1006209686		Splines:	10
		Length:	53.5 mm
		O.D.	25.8 mm
		Shaft:	12 mm

STARTER DRIVES
BOSCH

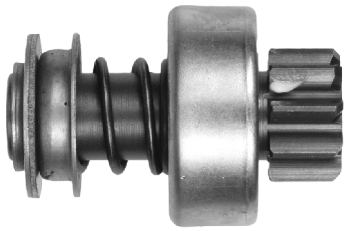

AS SD0064

ORIGINAL	CARGO		
2006209458	136509	Tooth:	9
2006209543		Splines:	10
2006209544		Length:	91 mm
		O.D.	37 mm
		Shaft:	14 mm

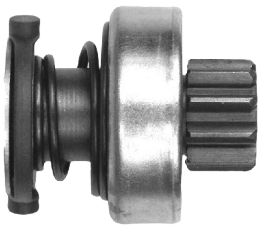

AS SD0065

ORIGINAL	CARGO		
9002336223	136787	Tooth:	10
		Splines:	10
		Length:	61 mm
		O.D.	28 mm
		Shaft:	12 mm

AS SD0066

ORIGINAL	CARGO		
1006209621	136854	Tooth:	10
1006209648		Splines:	16
		Length:	80 mm
		O.D.	28 mm
		Shaft:	11 mm ACW

AS SD0067

ORIGINAL	CARGO		
1006209561	136888	Tooth:	9
		Splines:	10
		Length:	58.5 mm
		O.D.	25.9 mm
		Shaft:	11 mm

AS SD0068

ORIGINAL	CARGO		
1006209564	136925	Tooth:	9
		Splines:	10
		Length:	58.5 mm
		O.D.	25.8 mm
		Shaft:	12 mm

AS SD0069

ORIGINAL	CARGO		
1006209482	137279	Tooth:	10
1006209914		Splines:	10
		Length:	75 mm
		O.D.	33 mm
		Shaft:	12 mm

AS SD0070

ORIGINAL	CARGO		
1006209628	137480	Tooth:	9
1006209649		Splines:	16
1006209758		Length:	81 mm
		O.D.	25.8 mm
		Shaft:	11 mm ACW

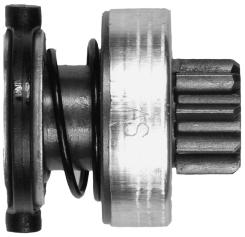

AS SD0071

ORIGINAL	CARGO		
1006209618	137481	Tooth:	9
1006209677		Splines:	10
1006209690		Length:	50.4 mm
		O.D.	25.8 mm
		Shaft:	12 mm

AS SD0072

ORIGINAL	CARGO		
1006209624	137483	Tooth:	9
1006209633		Splines:	10
1006209706		Length:	48.8 mm
		O.D.	26 mm
		Shaft:	12 mm

STARTER DRIVES
BOSCH

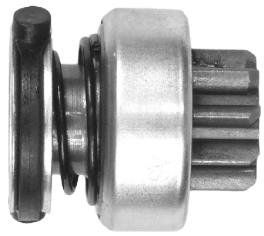

AS SD0073

ORIGINAL	CARGO
1006209634	137888

Tooth:	9
Splines:	10
Length:	50 mm
O.D.	29.6 mm
Shaft:	12 mm

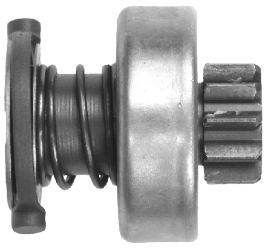

AS SD0074

ORIGINAL	CARGO
1006209637	137889

Tooth:	10
Splines:	10
Length:	57.3 mm
O.D.	27.7 mm
Shaft:	12 mm

AS SD0075

ORIGINAL	CARGO
1006209643	137890

Tooth:	9
Splines:	16
Length:	92 mm
O.D.	26 mm
Shaft:	11 mm ACW

AS SD0076

ORIGINAL	CARGO
1006209652	137891

Tooth:	21
Splines:	10
Length:	49 mm
O.D.	49.6 mm
Shaft:	12 mm

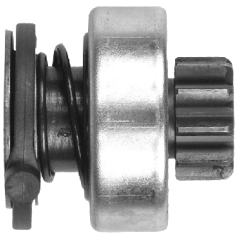

AS SD0077

ORIGINAL	CARGO
1006209629	137981
1006209929	

Tooth:	10
Splines:	10
Length:	48.5 mm
O.D.	26.6 mm
Shaft:	12 mm

AS SD0078

ORIGINAL	CARGO
1006209613	138233

Tooth:	8
Splines:	10
Length:	54 mm
O.D.	27.2 mm
Shaft:	12 mm

AS SD0079

ORIGINAL	CARGO
2006202010	138308
2006202011	

Tooth:	11
Splines:	19
Length:	118 mm
O.D.	42 mm
Shaft:	16 mm

AS SD0080

ORIGINAL	CARGO
1006209642	138322

Tooth:	10
Splines:	10
Length:	50.5 mm
O.D.	27.7 mm
Shaft:	12 mm

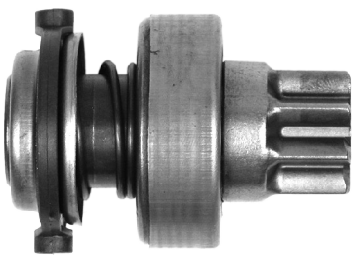

AS SD0081

ORIGINAL	CARGO
1006209932	138874

Tooth:	8
Splines:	10
Length:	69 mm
O.D.	27 mm
Shaft:	12 mm ACW

STARTER DRIVES
BOSCH

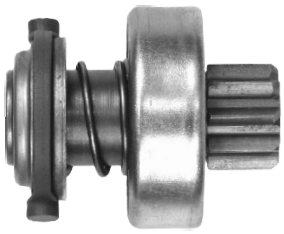

AS SD0082

ORIGINAL	CARGO		
9002336208	138948	Tooth:	9
		Splines:	10
		Length:	65 mm
		O.D.	25.8 mm
		Shaft:	12 mm

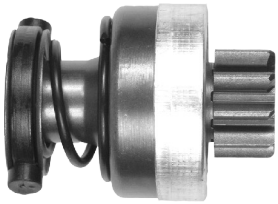

AS SD0083

ORIGINAL	CARGO		
9002336236	139056	Tooth:	9
		Splines:	10
		Length:	82.5 mm
		O.D.	34.8 mm
		Shaft:	14 mm

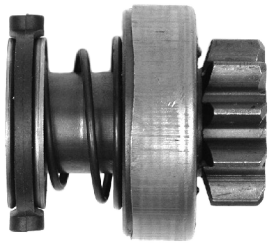

AS SD0084

ORIGINAL	CARGO		
9002336225	139458	Tooth:	10
		Splines:	10
		Length:	58 mm
		O.D.	37 mm
		Shaft:	12 mm

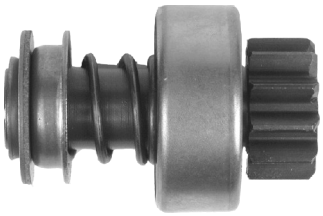

AS SD0085

ORIGINAL	CARGO		
2006206542	139506	Tooth:	11
	137231	Splines:	10
		Length:	91.5 mm
		O.D.	42 mm
		Shaft:	14 mm

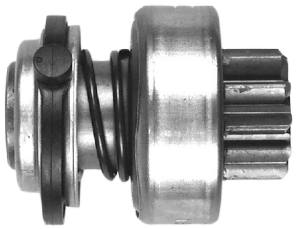

AS SD0086

ORIGINAL	CARGO		
1006209546	139846	Tooth:	10
		Splines:	10
		Length:	58.5 mm
		O.D.	27.94 mm
		Shaft:	12 mm

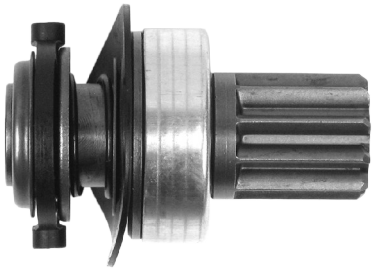

AS SD0087

ORIGINAL	CARGO		
1006209553	139850	Tooth:	10
1006209565		Splines:	10
		Length:	79.5 mm
		O.D.	27.94 mm
		Shaft:	12 mm ACW

AS SD0088

ORIGINAL	CARGO		
1006209607	139954	Tooth:	9
1006209675		Splines:	10
		Length:	49 mm
		O.D.	29 mm
		Shaft:	12 mm

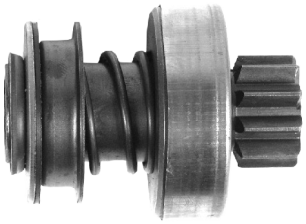

AS SD0089

ORIGINAL	CARGO		
2006209503	230144	Tooth:	10
		Splines:	10
		Length:	71.5 mm
		O.D.	27 mm
		Shaft:	12 mm

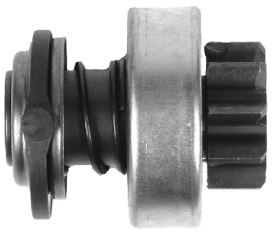

AS SD0090

ORIGINAL	CARGO		
9002336219	230336	Tooth:	9
		Splines:	10
		Length:	62 mm
		O.D.	35 mm
		Shaft:	12 mm

STARTER DRIVES
BOSCH

AS SD0091

ORIGINAL	CARGO
1006209657	230339

Tooth:	9
Splines:	16
Length:	81 mm
O.D.	25 mm
Shaft:	11 mm
	ACW

AS SD0092

ORIGINAL	CARGO
1006209680	230340

Tooth:	10
Splines:	16
Length:	80 mm
O.D.	27 mm
Shaft:	11 mm
	ACW

AS SD0093

ORIGINAL	CARGO
1006209646	230352

Tooth:	11
Splines:	10
Length:	49 mm
O.D.	29 mm
Shaft:	12 mm

AS SD0094

ORIGINAL	CARGO
9002336224	230546
9003336287	

Tooth:	9
Splines:	10
Length:	62 mm
O.D.	29 mm
Shaft:	12 mm

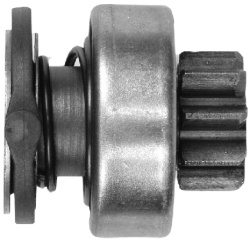

AS SD0095

ORIGINAL	CARGO
1006209645	230828

Tooth:	9
Splines:	10
Length:	49 mm
O.D.	29 mm
Shaft:	12 mm

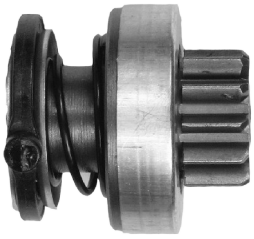

AS SD0096

ORIGINAL	CARGO
1006209671	230834

Tooth:	11
Splines:	10
Length:	51 mm
O.D.	29 mm
Shaft:	12 mm

AS SD0097

ORIGINAL	CARGO
1006209678	230835

Tooth:	10
Splines:	10
Length:	50.5 mm
O.D.	27 mm
Shaft:	12 mm

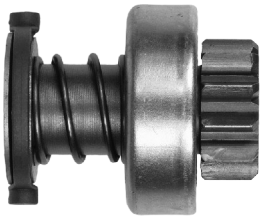

AS SD0098

ORIGINAL	CARGO
6033AD0061	231898

Tooth:	11
Splines:	16
Length:	62 mm
O.D.	36 mm
Shaft:	12 mm

AS SD0099

ORIGINAL	CARGO
1006209542	232481

Tooth:	9
Splines:	10
Length:	58 mm
O.D.	30 mm
Shaft:	12 mm
	ACW

STARTER DRIVES
BOSCH

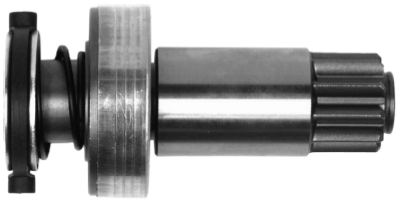

AS SD0100

ORIGINAL	CARGO
1006209681	232623

Tooth:	10
Splines:	16
Length:	105.5 mm
O.D.	28 mm
Shaft:	12 mm ACW

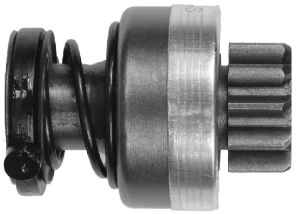

AS SD0101

ORIGINAL	CARGO
6033AD0200	231756

Tooth:	10
Splines:	10
Length:	84 mm
O.D.	40 mm
Shaft:	14 mm

AS SD0102

ORIGINAL	CARGO
6033AD0004	233836

Tooth:	9
Splines:	16
Length:	58 mm
O.D.	30 mm
Shaft:	12 mm

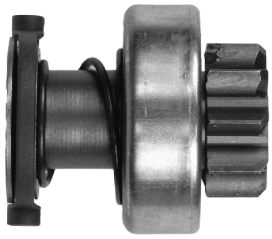

AS SD0103

ORIGINAL	CARGO
6033AD0414	233719

Tooth:	9
Splines:	16
Length:	58 mm
O.D.	36 mm
Shaft:	12 mm

AS SD0104

ORIGINAL	CARGO
2006401527	130317

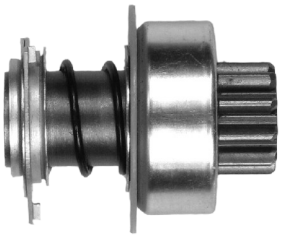

AS SD0105

ORIGINAL	CARGO
1006209437	130412

Tooth:	10
Splines:	10
Length:	64.5 mm
O.D.	26.8 mm
Shaft:	12 mm

AS SD0106

ORIGINAL	CARGO
2006209201	132697
2006209306	
2006209346	

Tooth:	10
Splines:	10
Length:	91 mm
O.D.	32 mm
Shaft:	14 mm

AS SD0107

ORIGINAL	CARGO
1006209641	138875

Tooth:	9
Splines:	16
Length:	81 mm
O.D.	26 mm
Shaft:	11 mm

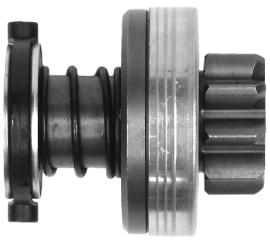

AS SD0108

ORIGINAL	CARGO
6033AD0077	233835

Tooth:	9
Splines:	16
Length:	62 mm
O.D.	36 mm
Shaft:	12 mm

STARTER DRIVES
BOSCH

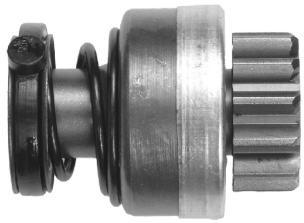

AS SD0109

ORIGINAL	CARGO
6033AD0129	233722

Tooth:	12
Splines:	10
Length:	82 mm
O.D.	46 mm
Shaft:	14 mm

AS SD0110

ORIGINAL	CARGO
1006209661	234242

Tooth:	10
Splines:	16
Length:	72 mm
O.D.	28 mm
Shaft:	12 mm

AS SD0111

ORIGINAL	CARGO
9003336282	234403

Tooth:	9
Splines:	10
Length:	62 mm
O.D.	34.8 mm
Shaft:	12 mm

AS SD0112

ORIGINAL	CARGO
6033AD0148	233837

Tooth:	9
Splines:	10
Length:	82 mm
O.D.	35 mm
Shaft:	14 mm

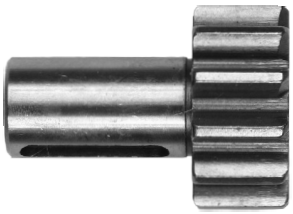

AS SD0113

ORIGINAL	CARGO
2006382190	135860

Tooth:	12
Splines:	
Length:	61 mm
O.D.	46.7 mm
Shaft:	

AS SD0114

ORIGINAL	CARGO
2006209022	130415

Tooth:	9
Splines:	3
Length:	90 mm
O.D.	34 mm
Shaft:	14 mm

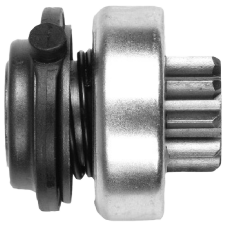

AS SD0115

ORIGINAL	CARGO
1006209704	231896

Tooth:	9
Splines:	10
Length:	47 mm
O.D.	26 mm
Shaft:	12 mm

AS SD0116

ORIGINAL	CARGO
1006209650	231009

Tooth:	9
Splines:	10
Length:	50 mm
O.D.	30 mm
Shaft:	12 mm
	ACW

AS SD0117

ORIGINAL	CARGO
6033AD0270	234405

Tooth:	9
Splines:	16
Length:	58 mm
O.D.	35 mm
Shaft:	

STARTER DRIVES
BOSCH

AS SD0118

ORIGINAL	CARGO
1006209401	130393

Tooth:	9
Splines:	10
Length:	68.5 mm
O.D.	25.8 mm
Shaft:	12 mm

AS SD0120

ORIGINAL	CARGO
1006209812	234535

Tooth:	10
Splines:	16
Length:	47.8 mm
O.D.	27.8 mm
Shaft:	11 mm

AS SD0121

ORIGINAL	CARGO
2006209432	138316

Tooth:	10
Splines:	10
Length:	91 mm
O.D.	40 mm
Shaft:	14 mm

AS SD0122

ORIGINAL	CARGO
6033AD0242	236130

Tooth:	11
Splines:	10
Length:	85.3 mm
O.D.	40 mm
Shaft:	14 mm

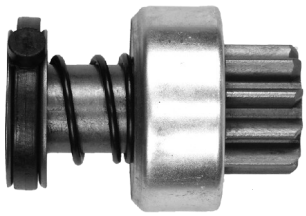

AS SD0123

ORIGINAL	CARGO
6033AD0306	234087

Tooth:	10
Splines:	10
Length:	84 mm
O.D.	38 mm
Shaft:	14 mm

AS SD0124

ORIGINAL	CARGO
6033AD0218	136614

Tooth:	9
Splines:	10
Length:	58.5 mm
O.D.	30 mm
Shaft:	12 mm

AS SD0125

ORIGINAL	CARGO
6033AD0218	234168

Tooth:	10
Splines:	16
Length:	60 mm
O.D.	27.5 mm
Shaft:	12 mm

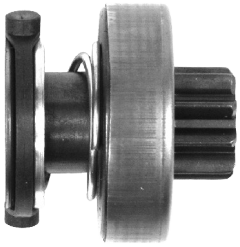

AS SD0126

ORIGINAL	CARGO
1006209656	233828

Tooth:	9
Splines:	10
Length:	51 mm
O.D.	34 mm
Shaft:	12 mm

AS SD0127

ORIGINAL
1006209674

Tooth:	9
Splines:	10
Length:	51.5 mm
O.D.	29.5 mm
Shaft:	12 mm
	CW

STARTER DRIVES
BOSCH

AS SD0128

ORIGINAL	CARGO
6033AD5078	237752

Tooth:	
Splines:	7/19
Length:	127.3 mm
O.D.	
Shaft:	

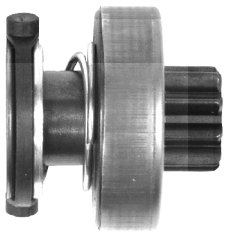

AS SD0129

ORIGINAL	CARGO
1006209653	233720

Tooth:	9
Splines:	10
Length:	50 mm
O.D.	25 mm
Shaft:	12 mm

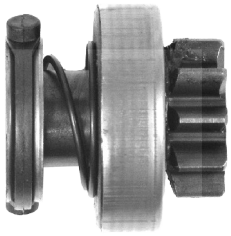

AS SD0130

ORIGINAL	CARGO
1006209669	233829

Tooth:	10
Splines:	10
Length:	51.5 mm
O.D.	39 mm
Shaft:	12 mm

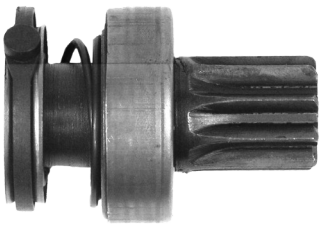

AS SD0131

ORIGINAL	CARGO
1006209753	233841

Tooth:	9
Splines:	10
Length:	67 mm
O.D.	25 mm
Shaft:	12 mm ACW

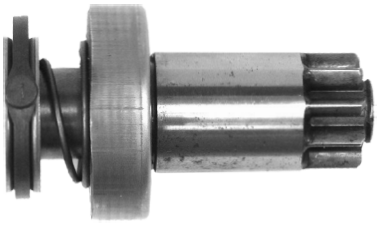

AS SD0132

ORIGINAL	CARGO
1006209755	234141
1006209783	
1006209949	

Tooth:	9
Splines:	16
Length:	90 mm
O.D.	29 mm
Shaft:	11 mm

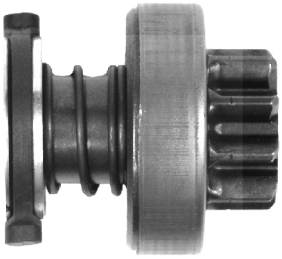

AS SD0133

ORIGINAL
1006209775

Tooth:	9
Splines:	10
Length:	55 mm
O.D.	34 mm
Shaft:	12 mm

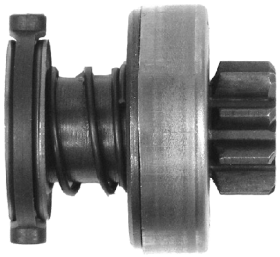

AS SD0134

ORIGINAL
1006209784

Tooth:	9
Splines:	10
Length:	56 mm
O.D.	29 mm
Shaft:	12 mm

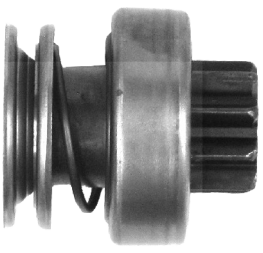

AS SD0135

ORIGINAL	CARGO
1006209796	236832

Tooth:	9
Splines:	10
Length:	48.5 mm
O.D.	25.3 mm
Shaft:	11 mm

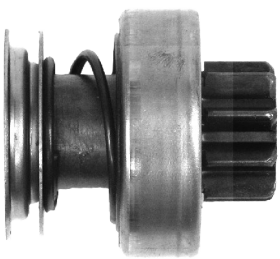

AS SD0136

ORIGINAL	CARGO
1006209801	234247

Tooth:	9
Splines:	16
Length:	48.5 mm
O.D.	25.4 mm
Shaft:	11 mm

STARTER DRIVES
BOSCH

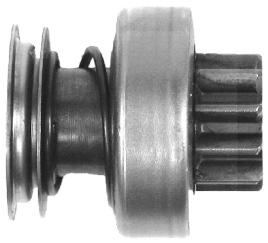

AS SD0137

ORIGINAL	CARGO
1006209804	234124

Tooth:	10
Splines:	16
Length:	48.5 mm
O.D.	26 mm
Shaft:	11 mm

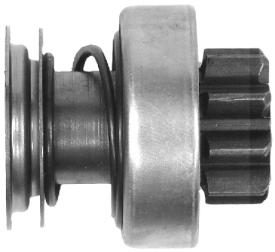

AS SD0138

ORIGINAL	CARGO
1006209805	234946

Tooth:	9
Splines:	16
Length:	48 mm
O.D.	29.6 mm
Shaft:	11 mm

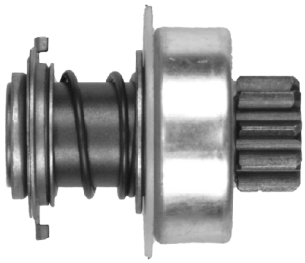

AS SD0139

ORIGINAL	CARGO
1006209403	130405

Tooth:	9
Splines:	10
Length:	63.5 mm
O.D.	25.8 mm
Shaft:	12 mm

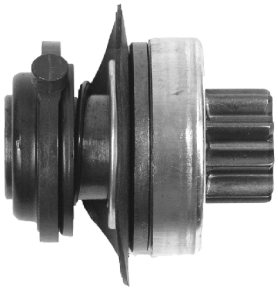

AS SD0140

ORIGINAL	CARGO
1006209533	136472

Tooth:	9
Splines:	10
Length:	58.4 mm
O.D.	26 mm
Shaft:	12 mm

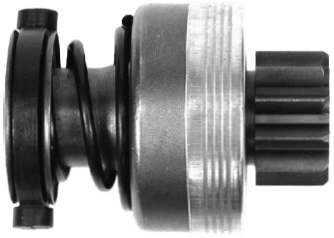

AS SD0141

ORIGINAL	CARGO
6033AD0115	233949
6033AD4001	

Tooth:	11
Splines:	10
Length:	83 mm
O.D.	35.8 mm
Shaft:	14 mm

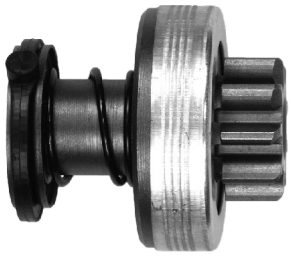

AS SD0142

ORIGINAL	CARGO
6033AD1062	233947

Tooth:	9
Splines:	16
Length:	61.5 mm
O.D.	34.5 mm
Shaft:	12 mm

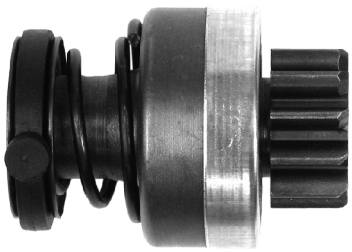

AS SD0143

ORIGINAL
6033AD0250

Tooth:	11
Splines:	10
Length:	83 mm
O.D.	42 mm
Shaft:	14 mm

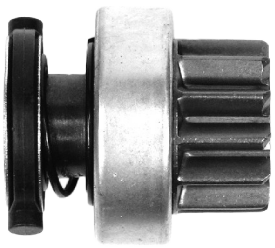

AS SD0144

ORIGINAL	CARGO
1006209824	330265

Tooth:	12
Splines:	10
Length:	58 mm
O.D.	39 mm
Shaft:	12 mm CW

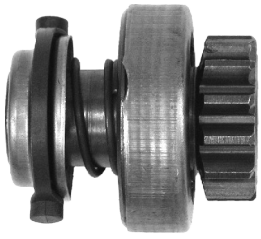

AS SD0145

ORIGINAL	CARGO
1006209622	230350

Tooth:	13
Splines:	10
Length:	58.5 mm
O.D.	39.5 mm
Shaft:	12 mm CW

STARTER DRIVES
BOSCH

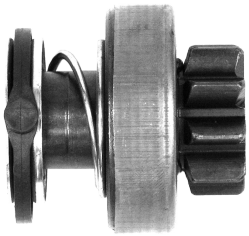

AS SD0146

ORIGINAL	CARGO
1006209818	237667

Tooth:	9
Splines:	10
Length:	56 mm
O.D.	35.5 mm
Shaft:	

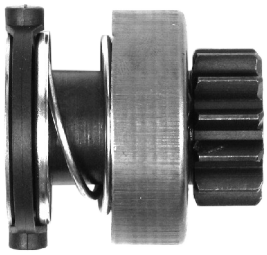

AS SD0147

ORIGINAL
1006209828
1006209845

Tooth:	12
Splines:	10
Length:	50 mm
O.D.	32 mm
Shaft:	12 mm

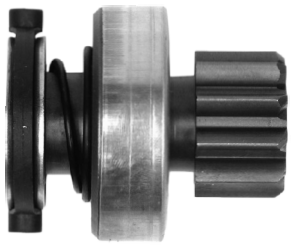

AS SD0148

ORIGINAL	CARGO
1006209666	234158

Tooth:	10
Splines:	9
Length:	61.8 mm
O.D.	32.7 mm
Shaft:	12 mm

AS SD0149

ORIGINAL	CARGO
1006209695	235440

Tooth:	11
Splines:	10
Length:	50 mm

AS SD0150

ORIGINAL	CARGO
1006209813	236883

Tooth:	10
Splines:	16
Length:	91 mm
O.D.	28 mm
Shaft:	11 mm
	ACW

AS SD0151

ORIGINAL	CARGO
6033AD0091	234406

Tooth:	10
Splines:	10
Length:	75 mm
O.D.	32 mm
Shaft:	14.25 mm

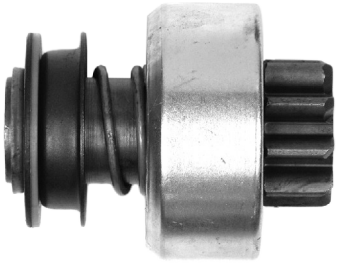

AS SD0152

ORIGINAL	CARGO
2006209246	131712

Tooth:	9
Splines:	10
Length:	77 mm
O.D.	34.8 mm
Shaft:	14.4 mm

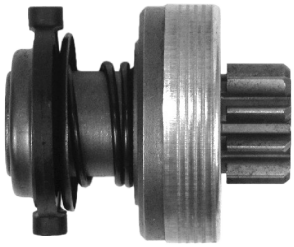

AS SD0153

ORIGINAL	CARGO
9002336200	136425
9002336205	

Tooth:	10
Splines:	10
Length:	62.5 mm
O.D.	27 mm
Shaft:	12 mm
	CW

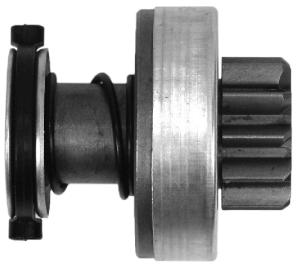

AS SD0154

ORIGINAL	CARGO
9002336230	137275

Tooth:	11
Splines:	10
Length:	64 mm
O.D.	36 mm
Shaft:	12 mm
	CW

STARTER DRIVES
BOSCH

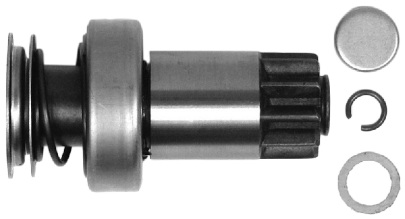

AS SD0155

ORIGINAL	CARGO
1006209806	234785

Tooth:	10
Splines:	16
Length:	83 mm
O.D.	27.5 mm
Shaft:	13.5 mm ACW

AS SD0156

ORIGINAL	CARGO
1006209794	235290
1006209810	239903
1006209820	
6004AHS018	

Tooth:	8
Splines:	10
Length:	48 mm
O.D.	27 mm
Shaft:	11 mm

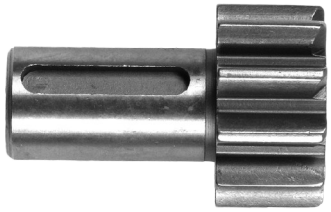

AS SD0157

ORIGINAL	CARGO
2006382178	230961
2006382182	
2006382188	

Tooth:	10
Splines:	
Length:	61 mm
O.D.	39.1 mm
Shaft:	

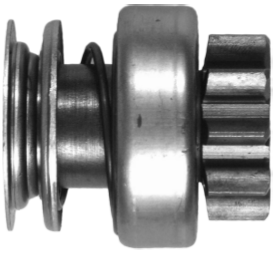

AS SD0158

ORIGINAL
1006209825

Tooth:	9
Splines:	10
Length:	49 mm
O.D.	34 mm
Shaft:	11 mm

AS SD0159

ORIGINAL
1006209862

Tooth:	
Splines:	
Length:	
O.D.	
Shaft:	

DUST COVER KITS
BOSCH

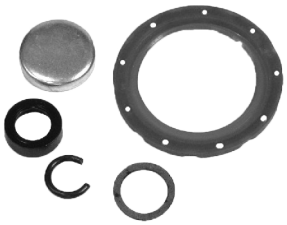

AS SDK0001

CARGO
230338

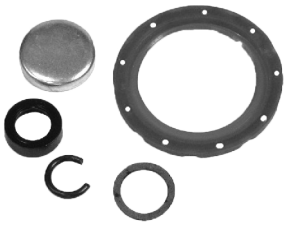

AS SDK0002

CARGO
230091

AS SDK0003

CARGO
138683

AS SDK0004

CARGO
234987

AS SDK0005

CARGO	GHIBAUDI
210867	5000K

Tool for mounting a repair kits:
SDK0001, SDK0002

STARTER DRIVES
DELCO

AS SD1001

ORIGINAL	CARGO		
DR2003	130465	Tooth:	9
		Splines:	12
		Length:	65.5 mm
		O.D.	25.8 mm
		Shaft:	12 mm

AS SD1002

ORIGINAL	CARGO		
1954842	130537	Tooth:	9
		Splines:	3
		Length:	79 mm
		O.D.	25.1 mm
		Shaft:	12 mm

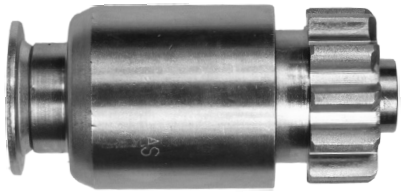

AS SD1003

ORIGINAL	CARGO		
1894211	130539	Tooth:	11
		Splines:	19
		Length:	120.4 mm
		O.D.	56.5 mm
		Shaft:	16 mm

AS SD1004

ORIGINAL	CARGO		
1951180	130540	Tooth:	12
		Splines:	3
		Length:	97 mm
		O.D.	46.3 mm
		Shaft:	14 mm

AS SD1005

ORIGINAL	CARGO		
1893560	131056	Tooth:	12
1894213		Splines:	19
		Length:	120.4 mm
		O.D.	46.2 mm
		Shaft:	16 mm

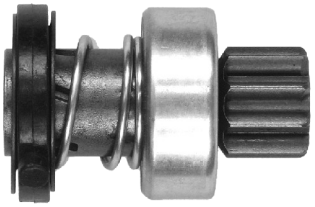

AS SD1006

ORIGINAL	CARGO		
10498527	132943	Tooth:	9
		Splines:	6
		Length:	68 mm
		O.D.	25.4 mm
		Shaft:	12 mm

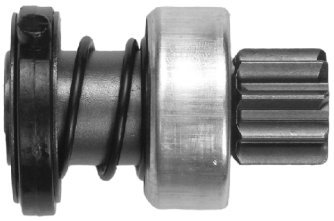

AS SD1007

ORIGINAL	CARGO		
10469173	135063	Tooth:	9
10473700		Splines:	3
		Length:	69 mm
		O.D.	25.8 mm
		Shaft:	12 mm

AS SD1008

ORIGINAL	CARGO		
10497257	136342	Tooth:	9
		Splines:	6
		Length:	64 mm
		O.D.	25.8 mm
		Shaft:	12 mm

AS SD1009

ORIGINAL	CARGO		
10475616	138216	Tooth:	11
		Splines:	6
		Length:	61 mm
		O.D.	29.5 mm
		Shaft:	12 mm

STARTER DRIVES
DELCO

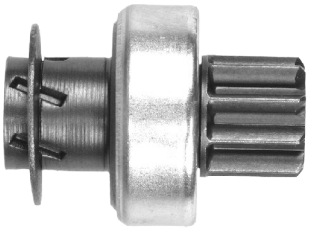

AS SD1010

ORIGINAL	CARGO
10476642	138222

Tooth:	9
Splines:	6
Length:	61 mm
O.D.	25.4 mm
Shaft:	12 mm

AS SD1011

ORIGINAL	CARGO
10475974	230073

Tooth:	9
Splines:	6
Length:	45 mm
O.D.	25.8 mm
Shaft:	12 mm

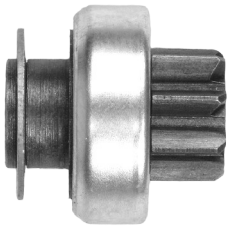

AS SD1012

ORIGINAL	CARGO
96275481	231789
96569440	

Tooth:	8
Splines:	6
Length:	45 mm
O.D.	28 mm
Shaft:	12 mm

AS SD1013

ORIGINAL	CARGO
10492409	231966

Tooth:	11
Splines:	6
Length:	47 mm
O.D.	30 mm
Shaft:	12 mm

AS SD1014

ORIGINAL	CARGO
10471539	132695

Tooth:	9
Splines:	3
Length:	68.5 mm
O.D.	24.9 mm
Shaft:	12 mm

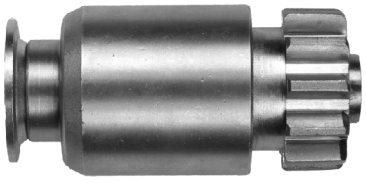

AS SD1015

ORIGINAL	CARGO
1894212	132731

Tooth:	11
Splines:	19
Length:	121 mm
O.D.	56.4 mm
Shaft:	16 mm ACW

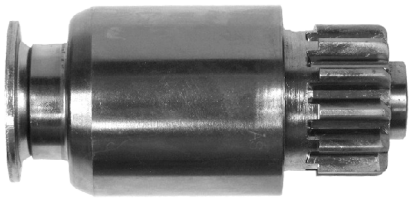

AS SD1016

ORIGINAL	CARGO
1893561	231970

Tooth:	12
Splines:	19
Length:	120 mm
O.D.	46.5 mm
Shaft:	16 mm ACW

AS SD1017

ORIGINAL	CARGO
10476528	231968

Tooth:	11
Splines:	19
Length:	102 mm
O.D.	57 mm
Shaft:	16 mm

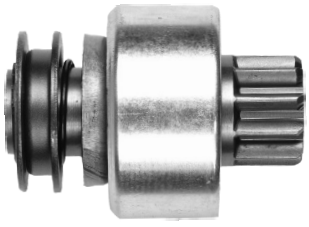

AS SD1018

ORIGINAL	CARGO
10457121	137760

Tooth:	10
Splines:	12
Length:	86 mm
O.D.	32 mm
Shaft:	14 mm

STARTER DRIVES
DELCO

AS SD1019

ORIGINAL	CARGO
F3RZ11350A	138209

Tooth:	10
Splines:	12
Length:	47 mm
O.D.	26.8 mm
Shaft:	12 mm

AS SD1020

ORIGINAL	CARGO
1985262	131481

Tooth:	12
Splines:	3
Length:	98 mm
O.D.	46.3 mm
Shaft:	14 mm

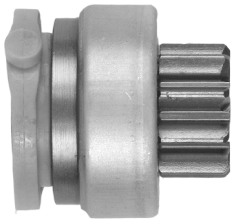

AS SD1021

ORIGINAL	CARGO
F0FZ11350A	231961

Tooth:	9
Splines:	12
Length:	47 mm
O.D.	30 mm
Shaft:	12 mm

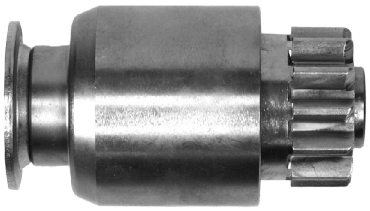

AS SD1022

ORIGINAL	CARGO
10472565	230911

Tooth:	12
Splines:	19
Length:	102 mm
O.D.	46 mm

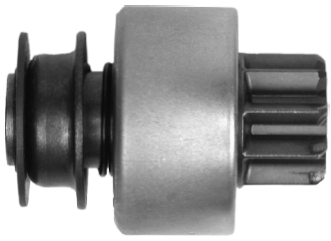

AS SD1023

ORIGINAL	CARGO
10457362	233387

Tooth:	9
Splines:	12
Length:	85.5 mm
O.D.	35.5 mm
Shaft:	14 mm

AS SD1024

ORIGINAL	CARGO
10499850	233171
1877347	

Tooth:	10
Splines:	3
Length:	96 mm
O.D.	32 mm
Shaft:	14.5 mm ACW

AS SD1025

CARGO
238626

Tooth:	9
Splines:	10
Length:	47 mm
O.D.	25 mm
Shaft:	CW

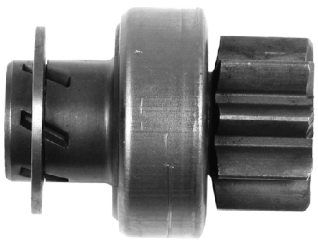

AS SD1026

for DRS3967N

Tooth:	9
Splines:	6
Length:	62 mm
O.D.	35.5 mm
Shaft:	12 mm

STARTER DRIVES
HITACHI

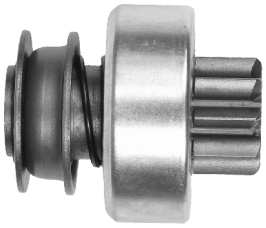

AS SD2001

ORIGINAL
2120-3500
2120-7500

Tooth:	9
Splines:	12
Length:	69 mm
O.D.	33 mm
Shaft:	14 mm

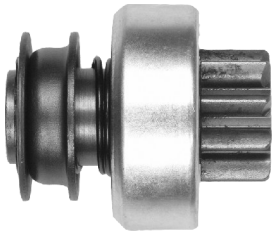

AS SD2002

ORIGINAL
2120-55002
2120-45002
2120-25001

Tooth:	9
Splines:	12
Length:	70 mm
O.D.	36 mm
Shaft:	14 mm

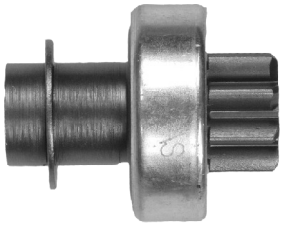

AS SD2003

ORIGINAL
2114-45504

Tooth:	8
Splines:	10
Length:	60 mm
O.D.	28 mm
Shaft:	12 mm

AS SD2004

ORIGINAL
2114-55506

Tooth:	9
Splines:	
Length:	87 mm
O.D.	28.6 mm
Shaft:	

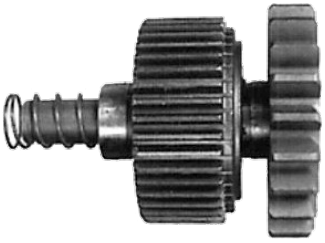

AS SD2005

ORIGINAL
2114-25014

Tooth:	21
Splines:	
Length:	79 mm
O.D.	59.8 mm
Shaft:	ACW

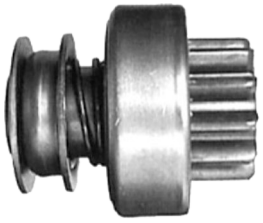

AS SD2006

ORIGINAL
2250-45003

Tooth:	11
Splines:	12
Length:	69.6 mm
O.D.	40 mm
Shaft:	14 mm

AS SD2008

ORIGINAL
2130-85003

Tooth:	9
Splines:	
Length:	87 mm
O.D.	32.5 mm
Shaft:	

AS SD2009

ORIGINAL
2114-85501

Tooth:	9
Splines:	
Length:	87 mm
O.D.	35.5 mm
Shaft:	

STARTER DRIVES
HITACHI

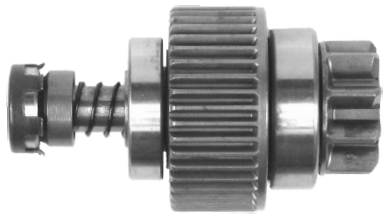

AS SD2010

ORIGINAL	CARGO		
2130-15005	135718	Tooth:	9
		Splines:	
		Length:	93.5 mm
		O.D.	35 mm
		Shaft:	

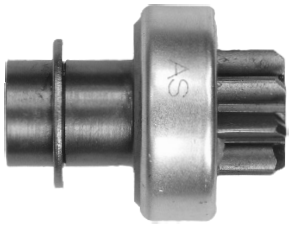

AS SD2011

ORIGINAL	CARGO		
2114-45508	136144	Tooth:	8
		Splines:	10
		Length:	60 mm
		O.D.	28 mm
		Shaft:	12 mm ACW

AS SD2012

ORIGINAL	CARGO		
2114-35551	136228	Tooth:	9
23312-12G02		Splines:	5
		Length:	78 mm
		O.D.	29.6 mm
		Shaft:	12 mm

AS SD2013

ORIGINAL	CARGO		
2114-25554	138958	Tooth:	11
		Splines:	10
		Length:	38.5 mm
		O.D.	34.5 mm
		Shaft:	12 mm

AS SD2014

ORIGINAL	CARGO		
2114-15016	139132	Tooth:	8
		Splines:	10
		Length:	38.8 mm
		O.D.	28 mm
		Shaft:	12 mm

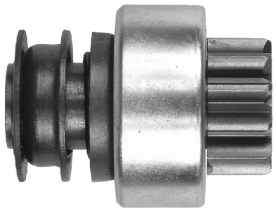

AS SD2015

ORIGINAL	CARGO		
2250-25003	133058	Tooth:	11
		Splines:	12
		Length:	78 mm
		O.D.	40.4 mm
		Shaft:	16 mm

AS SD2016

ORIGINAL	CARGO		
2130-35004	133437	Tooth:	9
		Splines:	
		Length:	87 mm
		O.D.	25 mm
		Shaft:	

AS SD2017

ORIGINAL	CARGO		
2114-65004	131086	Tooth:	8
		Splines:	5
		Length:	62 mm
		O.D.	28 mm
		Shaft:	12 mm

AS SD2018

ORIGINAL	CARGO		
2114-55004	131085	Tooth:	9
		Splines:	5
		Length:	62 mm
		O.D.	29.7 mm
		Shaft:	12 mm

STARTER DRIVES
HITACHI

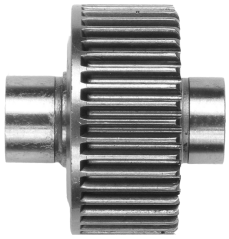

AS SD2019

ORIGINAL	CARGO		
2114-15505	132459	Tooth:	
		Splines:	
		Length:	50 mm
		O.D.	52 mm
		Shaft:	

AS SD2020

ORIGINAL	CARGO		
2130-25005	137277	Tooth:	9
		Splines:	
		Length:	96 mm
		O.D.	32 mm
		Shaft:	

AS SD2021

CARGO		
231795	Tooth:	13
	Splines:	10
	Length:	38.5 mm
	O.D.	33 mm
	Shaft:	12 mm

AS SD2022

ORIGINAL	CARGO		
2114-25016	230247	Tooth:	8
		Splines:	10
		Length:	61 mm
		O.D.	28 mm
		Shaft:	

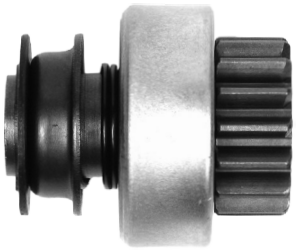

AS SD2023

ORIGINAL	CARGO		
2120-45001	133266	Tooth:	15
		Splines:	12
		Length:	69 mm
		O.D.	44.5 mm
		Shaft:	13.9 mm

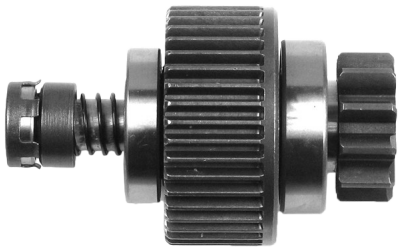

AS SD2024

ORIGINAL		
2240-2501	Tooth:	11
2240-6501	Splines:	
	Length:	103.4 mm
	O.D.	40.3 mm
	Shaft:	
FOR S25-163 3.4kW		ACW

STARTER DRIVES
VALEO

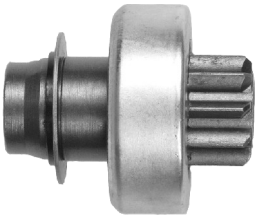

AS SD3001

ORIGINAL	CARGO
099931	131111

Tooth:	9
Splines:	9
Length:	55.5mm
O.D.	25.8 mm
Shaft:	12 mm

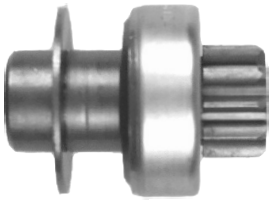

AS SD3002

ORIGINAL	CARGO
099738	131170

Tooth:	10
Splines:	9
Length:	61.5mm
O.D.	27.94mm
Shaft:	12 mm

AS SD3003

ORIGINAL	CARGO
059390	131343
589173	

Tooth:	12
Splines:	6
Length:	151mm
O.D.	46.7mm
Shaft:	20 mm

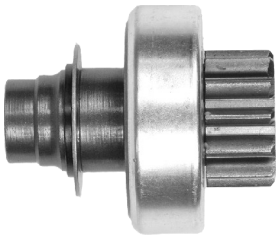

AS SD3004

ORIGINAL	CARGO
105538	131999
182047	

Tooth:	12
Splines:	9
Length:	61.5 mm
O.D.	31.8 mm
Shaft:	12 mm

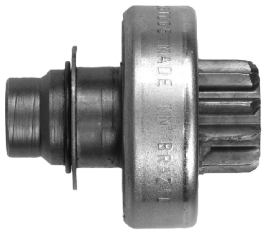

AS SD3005

ORIGINAL	CARGO
182052	132020
105540	

Tooth:	10
Splines:	9
Length:	61.5 mm
O.D.	27.94 mm
Shaft:	12 mm

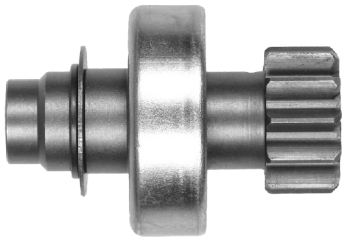

AS SD3006

ORIGINAL	CARGO
180826	132021
182177	

Tooth:	11
Splines:	9
Length:	76.5 mm
O.D.	34.4 mm
Shaft:	12 mm

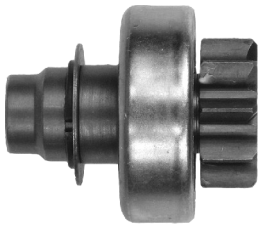

AS SD3007

ORIGINAL	CARGO
181068	132022
182178	

Tooth:	9
Splines:	9
Length:	61.5 mm
O.D.	37.1 mm
Shaft:	12 mm

AS SD3008

ORIGINAL	CARGO
103611	132177

Tooth:	11
Splines:	9
Length:	61 mm
O.D.	29.5 mm
Shaft:	12 mm

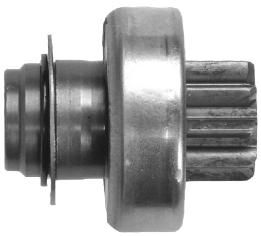

AS SD3009

ORIGINAL	CARGO
182412	132974
594029	
184448	

Tooth:	9
Splines:	9
Length:	51 mm
O.D.	25.8 mm
Shaft:	12 mm

STARTER DRIVES
VALEO

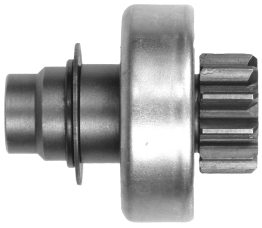

AS SD3010

ORIGINAL	CARGO
184530	133897
182176	
180827	

Tooth:	11
Splines:	9
Length:	61.5 mm
O.D.	29.6 mm
Shaft:	12 mm

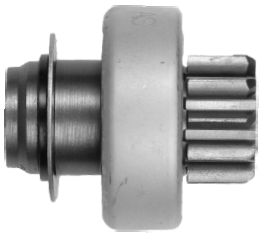

AS SD3011

ORIGINAL	CARGO
185441	135083
594108	

Tooth:	10
Splines:	9
Length:	51.5 mm
O.D.	27.94 mm
Shaft:	12 mm

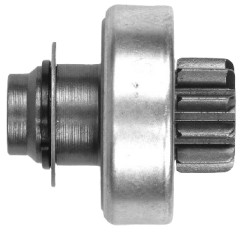

AS SD3012

ORIGINAL	CARGO
594136	135084

Tooth:	10
Splines:	9
Length:	54.5 mm
O.D.	28 mm
Shaft:	12 mm

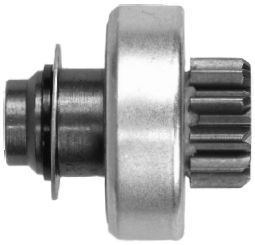

AS SD3013

ORIGINAL	CARGO
185915	135389
594185	

Tooth:	11
Splines:	9
Length:	55.1 mm
O.D.	30 mm
Shaft:	12 mm

AS SD3014

ORIGINAL	CARGO
186867	135647
186938	
594214	

Tooth:	9
Splines:	5
Length:	51.4 mm
O.D.	26 mm
Shaft:	12 mm

AS SD3015

ORIGINAL	CARGO
186798	137733
594177	

Tooth:	10
Splines:	5
Length:	51.5 mm
O.D.	28 mm
Shaft:	12 mm

AS SD3016

ORIGINAL	CARGO
187428	139320

Tooth:	9
Splines:	10
Length:	43 mm
O.D.	25 mm
Shaft:	11 mm

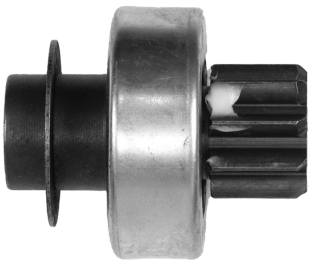

AS SD3017

ORIGINAL	CARGO
594248	139471
	234918

Tooth:	9
Splines:	10
Length:	56.5 mm
O.D.	25 mm
Shaft:	12 mm

AS SD3018

ORIGINAL	CARGO
594287	139473

Tooth:	9
Splines:	5
Length:	41.3 mm
O.D.	25 mm
Shaft:	11 mm

STARTER DRIVES
VALEO

AS SD3019

ORIGINAL	CARGO
594345	139477

Tooth:	8
Splines:	5
Length:	44.2 mm
O.D.	22 mm
Shaft:	11 mm

AS SD3020

ORIGINAL	CARGO
594279	139478

Tooth:	11
Splines:	10
Length:	55 mm
O.D.	28.5 mm
Shaft:	12 mm

AS SD3021

ORIGINAL	CARGO
180755	139904
594111	

Tooth:	10
Splines:	9
Length:	51 mm
O.D.	27 mm
Shaft:	12 mm
	ACW

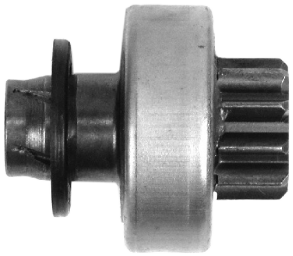

AS SD3022

ORIGINAL	CARGO
187567	230353
594303	

Tooth:	10
Splines:	5
Length:	54 mm
O.D.	28 mm
Shaft:	12 mm

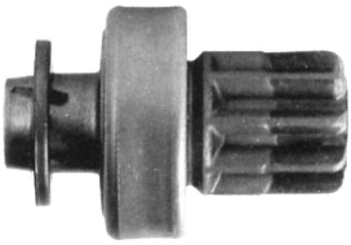

AS SD3023

ORIGINAL	CARGO
594361	231073

Tooth:	9
Splines:	5
Length:	69 mm
O.D.	29.2 mm
Shaft:	

AS SD3024

ORIGINAL	CARGO
594389	231093

Tooth:	11
Splines:	9
Length:	91.2 mm
O.D.	28.8 mm
Shaft:	
	ACW

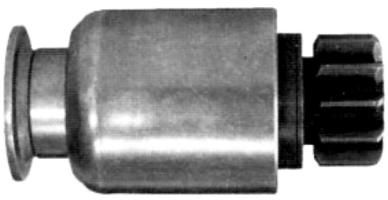

AS SD3025

ORIGINAL	CARGO
187449	231413
594295	

Tooth:	11
Splines:	19
Length:	115 mm
O.D.	41.3 mm
Shaft:	19 mm

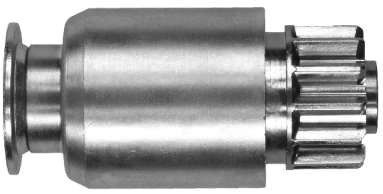

AS SD3026

ORIGINAL	CARGO
103066	232632

Tooth:	12
Splines:	19
Length:	118 mm
O.D.	46.3 mm
Shaft:	19 mm

AS SD3027

ORIGINAL	CARGO
594410	231932

Tooth:	10
Splines:	9
Length:	54.7 mm
O.D.	32.1 mm
Shaft:	12 mm

STARTER DRIVES
VALEO

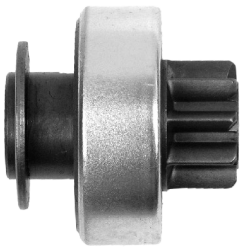

AS SD3028

ORIGINAL	CARGO		
191601	236797	Tooth:	9
		Splines:	10
		Length:	45.5 mm
		O.D.	25.3 mm
		Shaft:	12 mm

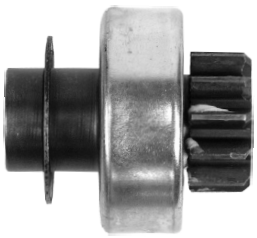

AS SD3029

ORIGINAL	CARGO		
188595	234086	Tooth:	11
594382		Splines:	5
		Length:	51.4 mm
		O.D.	29 mm
		Shaft:	12 mm

AS SD3030

ORIGINAL	CARGO		
594451	234996	Tooth:	8
		Splines:	10
		Length:	44.5mm
		O.D.	27.2 mm
		Shaft:	11 mm

AS SD3031

ORIGINAL	CARGO		
594436	234231	Tooth:	8
		Splines:	5
		Length:	41.5 mm
		O.D.	23 mm
		Shaft:	11 mm

AS SD3032

ORIGINAL	CARGO		
594657	236270	Tooth:	10
		Splines:	10
		Length:	45 mm
		O.D.	
		Shaft:	

AS SD3033

	CARGO		
	330104	Tooth:	10
		Splines:	8
		Length:	45.6 mm
		O.D.	32 mm
		Shaft:	12 mm

for CS1415

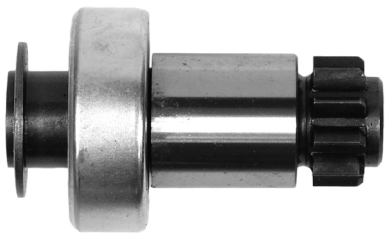

AS SD3034

	CARGO		
	236609	Tooth:	10
		Splines:	10
		Length:	82 mm
		O.D.	28.6 mm

ACW

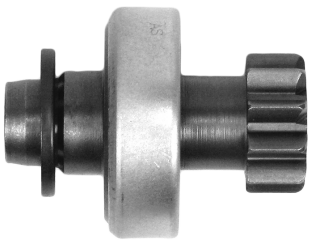

AS SD3035

ORIGINAL	CARGO		
187084	234088	Tooth:	10
		Splines:	10
		Length:	69.1 mm
		O.D.	32.5 mm
		Shaft:	12 mm

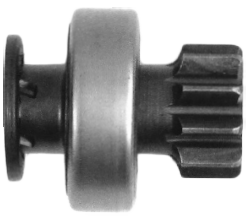

AS SD3036

ORIGINAL	CARGO		
594465	236238	Tooth:	10
		Splines:	5 / 10
		Length:	55 mm
		O.D.	31.5 mm
		Shaft:	12 mm

CW

STARTER DRIVES
VALEO

AS SD3037

CARGO		
237291	Tooth:	9
	Splines:	8
	Length:	82 mm
	O.D.	29 mm
	Shaft:	12 mm
		CW

AS SD3038

CARGO		
236477	Tooth:	11
	Splines:	4 / 8
	Length:	82 mm
	O.D.	29.5 mm
	Shaft:	16.2 mm
		ACW

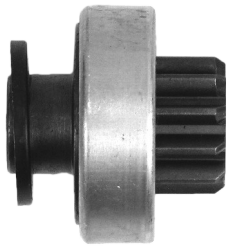

AS SD3039

ORIGINAL	CARGO		
594631	234819	Tooth:	11
		Splines:	10
		Length:	45mm
		O.D.	29.5 mm
		Shaft:	12 mm
			CW

AS SD3040

Tooth:		11
Splines:		8
Length:		90 mm
O.D.		29 mm
Shaft:		12 mm
		ACW

FOR D7GS10

AS SD3041

ORIGINAL	CARGO		
594472	235252	Tooth:	11
		Splines:	9
		Length:	92.8 mm
		O.D.	29 mm
		Shaft:	12 mm
			ACW

STARTER DRIVES
MAGNETI MARELLI/LUCAS

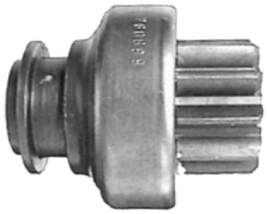

AS SD4001

ORIGINAL	CARGO		
54246340	130447	Tooth:	13
TMB116		Splines:	12
		Length:	70 mm
		O.D.	46 mm
		Shaft:	17 mm

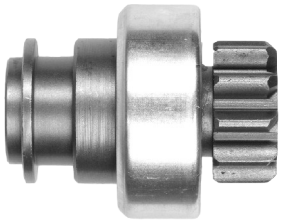

AS SD4002

ORIGINAL	CARGO		
TMB120	130452	Tooth:	10
		Splines:	12
		Length:	73.5 mm
		O.D.	40 mm
		Shaft:	17 mm

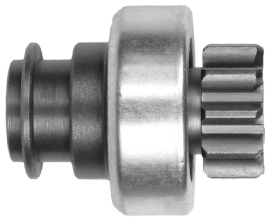

AS SD4003

ORIGINAL	CARGO		
54244938	130453	Tooth:	10
TMB100		Splines:	12
		Length:	73.5 mm
		O.D.	40 mm
		Shaft:	17 mm

AS SD4004

ORIGINAL	CARGO		
74866611	130738	Tooth:	11
85540271		Splines:	6
85540751		Length:	67.5 mm
		O.D.	29.5 mm
		Shaft:	14 mm

AS SD4005

ORIGINAL	CARGO		
72397101	131109	Tooth:	9
		Splines:	6
		Length:	78 mm
		O.D.	34.8 mm
		Shaft:	14 mm

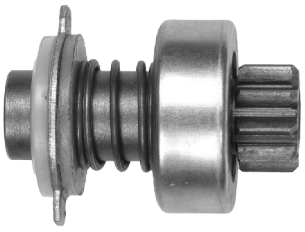

AS SD4006

ORIGINAL	CARGO		
74889271	131715	Tooth:	9
		Splines:	6
		Length:	68 mm
		O.D.	25.8 mm
		Shaft:	11.5 mm

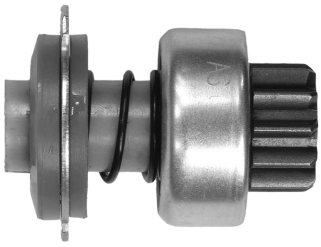

AS SD4007

ORIGINAL	CARGO		
74886131	131716	Tooth:	11
85540611		Splines:	6
		Length:	71.5 mm
		O.D.	29.5 mm
		Shaft:	11.5 mm

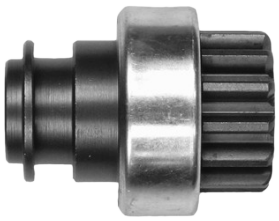

AS SD4008

ORIGINAL	CARGO		
54247397	131729	Tooth:	13
TMB125		Splines:	12
		Length:	73.5 mm
		O.D.	46 mm
		Shaft:	17 mm

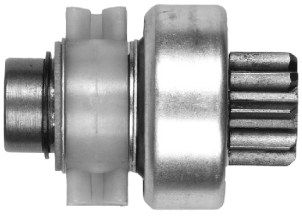

AS SD4009

ORIGINAL	CARGO		
74893901	132119	Tooth:	9
85540381		Splines:	12
		Length:	64 mm
		O.D.	26 mm
		Shaft:	11.5 mm

STARTER DRIVES
MAGNETI MARELLI/LUCAS

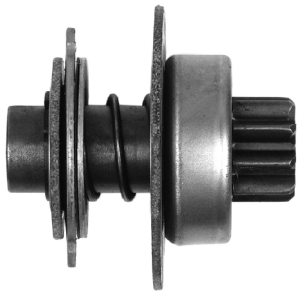

AS SD4010

ORIGINAL	CARGO
74885111	132186
85540651	

Tooth:	9
Splines:	12
Length:	69.5 mm
O.D.	25.5 mm
Shaft:	12 mm

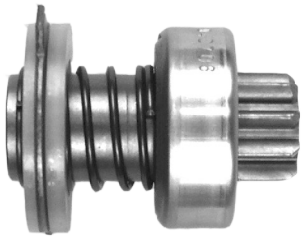

AS SD4011

ORIGINAL	CARGO
74895431	132187
85540481	
74888761	

Tooth:	9
Splines:	10
Length:	66 mm
O.D.	25.8 mm
Shaft:	12 mm

AS SD4012

ORIGINAL	CARGO
74891161	132188

Tooth:	11
Splines:	10
Length:	66 mm
O.D.	29.5 mm
Shaft:	11.5 mm

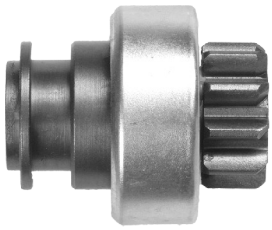

AS SD4013

ORIGINAL	CARGO
TMB148	132285
54268139	

Tooth:	10
Splines:	12
Length:	71 mm
O.D.	40 mm
Shaft:	17 mm

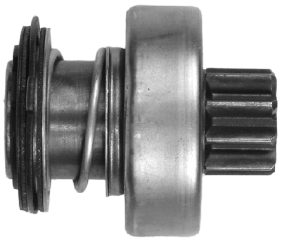

AS SD4014

ORIGINAL	CARGO
74896591	132818
85540431	
85540451	

Tooth:	9
Splines:	10
Length:	62 mm
O.D.	25.8 mm
Shaft:	12 mm

AS SD4015

ORIGINAL	CARGO
85540141	132819

Tooth:	9
Splines:	10
Length:	62.5 mm
O.D.	35 mm
Shaft:	12 mm

AS SD4016

ORIGINAL	CARGO
85540151	132821

Tooth:	9
Splines:	6
Length:	77.5 mm
O.D.	34.8 mm
Shaft:	14.3 mm

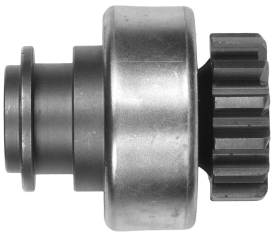

AS SD4017

ORIGINAL	CARGO
54268140	132852
TNB167	

Tooth:	13
Splines:	12
Length:	70 mm
O.D.	46 mm
Shaft:	17 mm

AS SD4018

ORIGINAL	CARGO
9939837	133841

Tooth:	9
Splines:	12
Length:	65.6 mm
O.D.	26 mm
Shaft:	11.5 mm

ACW

STARTER DRIVES
MAGNETI MARELLI/LUCAS

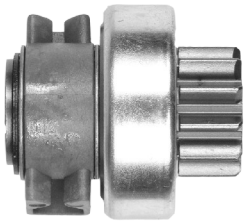

AS SD4019

ORIGINAL	CARGO		
85540321	134364	Tooth:	11
		Splines:	10
		Length:	52.5 mm
		O.D.	29.5 mm
		Shaft:	12 mm

AS SD4020

ORIGINAL	CARGO		
54292576	135100	Tooth:	9
TMB189		Splines:	9
		Length:	72 mm
		O.D.	26 mm
		Shaft:	12 mm ACW

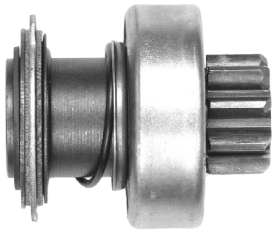

AS SD4021

ORIGINAL	CARGO		
85540681	135117	Tooth:	9
		Splines:	10
		Length:	62 mm
		O.D.	29 mm
		Shaft:	12 mm

AS SD4022

ORIGINAL	CARGO		
TMB196	135711	Tooth:	8
85541503		Splines:	9
		Length:	48.3 mm
		O.D.	28.2 mm
		Shaft:	12 mm

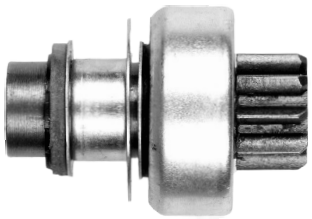

AS SD4023

ORIGINAL	CARGO		
85540971	135717	Tooth:	9
		Splines:	6
		Length:	64 mm
		O.D.	25.8 mm
		Shaft:	11.5 mm

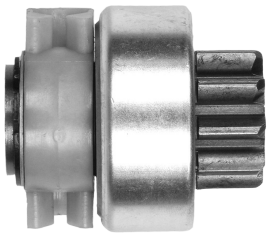

AS SD4024

ORIGINAL	CARGO		
85540881	136257	Tooth:	9
		Splines:	10
		Length:	53 mm
		O.D.	27.8 mm
		Shaft:	12 mm

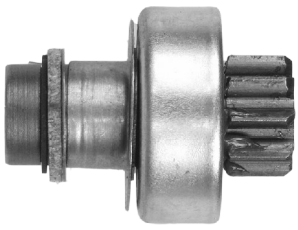

AS SD4025

ORIGINAL	CARGO		
85541240	138533	Tooth:	9
85541080		Splines:	12
		Length:	60 mm
		O.D.	25 mm
		Shaft:	11.5 mm

AS SD4026

ORIGINAL	CARGO		
85541160	138985	Tooth:	9
		Splines:	10
		Length:	64 mm
GHIBAUDI		O.D.	29 mm
2054		Shaft:	12 mm

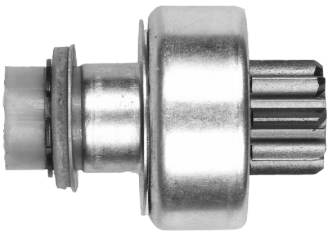

AS SD4027

ORIGINAL	CARGO		
85541280	139655	Tooth:	8
		Splines:	12
		Length:	64 mm
		O.D.	23.5 mm
		Shaft:	11.5 mm

STARTER DRIVES
MAGNETI MARELLI/LUCAS

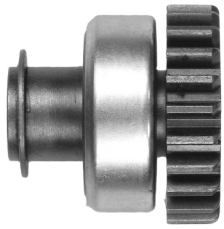

AS SD4028

ORIGINAL	CARGO		
54294813	139710	Tooth:	23
		Splines:	10
		Length:	50.7 mm
		O.D.	54.3 mm
		Shaft:	12 mm

AS SD4029

ORIGINAL	CARGO		
72399502	139848	Tooth:	11
		Splines:	6
		Length:	77.5 mm
		O.D.	41 mm
		Shaft:	14.3 mm

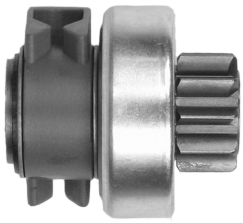

AS SD4030

ORIGINAL	CARGO		
85540831	139900	Tooth:	10
85541050		Splines:	10
		Length:	53 mm
		O.D.	27 mm
		Shaft:	12 mm

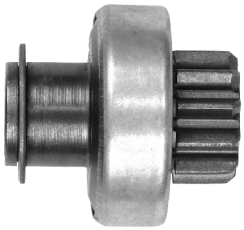

AS SD4031

ORIGINAL	CARGO		
85541250	139901	Tooth:	11
		Splines:	10
		Length:	50 mm
		O.D.	30 mm
		Shaft:	12 mm

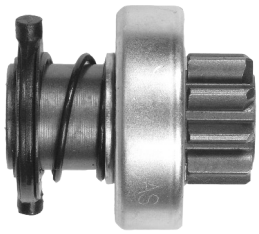

AS SD4032

ORIGINAL	CARGO		
85541700	139902	Tooth:	9
		Splines:	10
		Length:	64 mm
		O.D.	35 mm
		Shaft:	12 mm

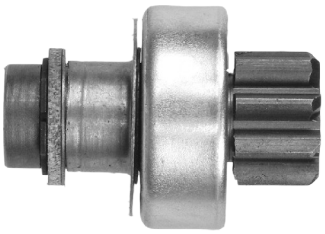

AS SD4033

ORIGINAL	CARGO		
85541220	231414	Tooth:	8
		Splines:	6/12
		Length:	63.9 mm
		O.D.	26 mm
		Shaft:	12 mm

AS SD4034

ORIGINAL	CARGO		
TMB167	132586	Tooth:	10
		Splines:	9
		Length:	48.2mm
		O.D.	27 mm
		Shaft:	12 mm

AS SD4035

ORIGINAL	CARGO		
TNB173	133683	Tooth:	10
		Splines:	12
		Length:	101 mm
		O.D.	32 mm
		Shaft:	14.3 mm

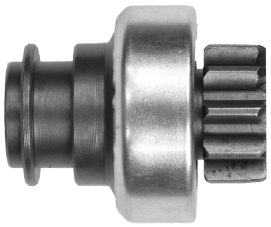

AS SD4036

ORIGINAL	CARGO		
TMB115	130445	Tooth:	10
		Splines:	12
		Length:	70 mm
		O.D.	40 mm
		Shaft:	17 mm

STARTER DRIVES
MAGNETI MARELLI/LUCAS

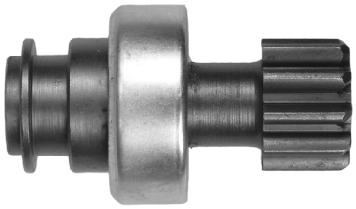

AS SD4037

ORIGINAL	CARGO		
TMB121	131728	Tooth:	10
		Splines:	12
		Length:	100 mm
		O.D.	40 mm
		Shaft:	17 mm

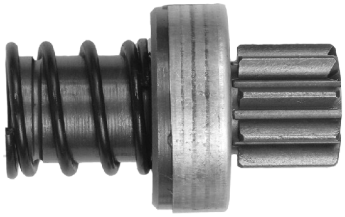

AS SD4038

ORIGINAL	CARGO		
TNB142	131707	Tooth:	9
		Splines:	12
		Length:	75.5 mm
		O.D.	29.3 mm
		Shaft:	12 mm

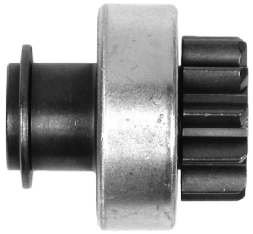

AS SD4039

ORIGINAL	CARGO		
85541300	231899	Tooth:	11
		Splines:	10
		Length:	50 mm
		O.D.	35 mm
		Shaft:	12 mm

AS SD4040

CARGO		
235663	Tooth:	10
	Splines:	10
	Length:	73.1 mm
	O.D.	40.6 mm
	Shaft:	12 mm

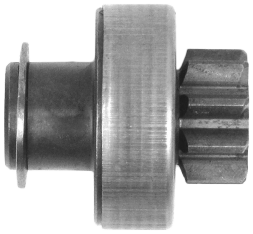

AS SD4041

ORIGINAL	CARGO		
85541270	138793	Tooth:	9
		Splines:	10
		Length:	50.5 mm
		O.D.	28.5 mm
		Shaft:	12 mm

STARTER DRIVES
MITSUBISHI

AS SD5001

ORIGINAL	CARGO
M191T30971	130741
M191T30171	
M191T33071	

Tooth:	9
Splines:	8
Length:	61 mm
O.D.	29.7 mm
Shaft:	12.8 mm

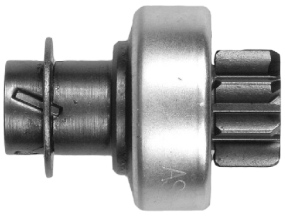

AS SD5002

ORIGINAL	CARGO
M191T35171	131087
M191T34071	
M191T33371	

Tooth:	8
Splines:	8
Length:	61 mm
O.D.	28 mm
Shaft:	12.8 mm

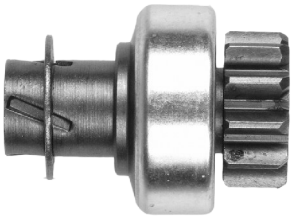

AS SD5003

ORIGINAL	CARGO
M191T31071	131628

Tooth:	11
Splines:	8
Length:	61 mm
O.D.	34.8 mm
Shaft:	12.8 mm

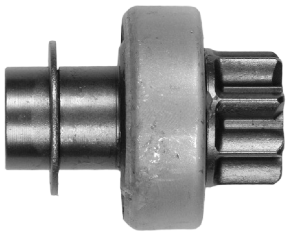

AS SD5004

ORIGINAL	CARGO
M191T22771	132005

Tooth:	8
Splines:	8
Length:	56 mm
O.D.	28 mm
Shaft:	12 mm

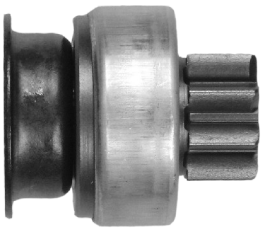

AS SD5005

ORIGINAL	CARGO
M191T12071	132011
M191T12471	

Tooth:	8
Splines:	8
Length:	51 mm
O.D.	28 mm
Shaft:	12 mm

AS SD5006

ORIGINAL	CARGO
M191T12171	132012

Tooth:	10
Splines:	8
Length:	51 mm
O.D.	30.5 mm
Shaft:	12 mm

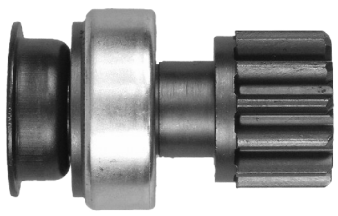

AS SD5007

ORIGINAL	CARGO
M191T12371	132013

Tooth:	12
Splines:	8
Length:	77 mm
O.D.	36.5 mm
Shaft:	12 mm

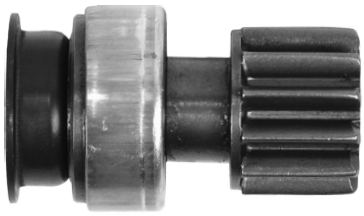

AS SD5008

ORIGINAL	CARGO
M191T16271	132014

Tooth:	12
Splines:	8
Length:	76 mm
O.D.	36.5 mm
Shaft:	12 mm ACW

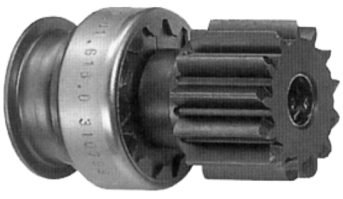

AS SD5009

ORIGINAL	CARGO
M191T16371	132015

Tooth:	13
Splines:	8
Length:	78 mm
O.D.	39.6 mm
Shaft:	12 mm ACW

STARTER DRIVES
MITSUBISHI

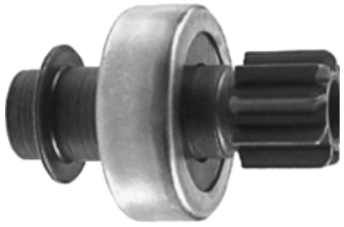

AS SD5010

ORIGINAL	CARGO		
M191T33471	132481	Tooth:	9
		Splines:	4
		Length:	74 mm
		O.D.	25.6 mm
		Shaft:	12.8 mm

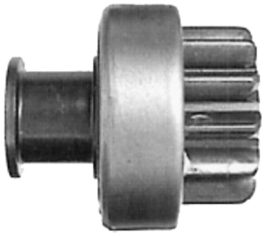

AS SD5011

ORIGINAL	CARGO		
M191T58971	132765	Tooth:	12
		Splines:	10
		Length:	66 mm
		O.D.	48 mm
		Shaft:	14 mm

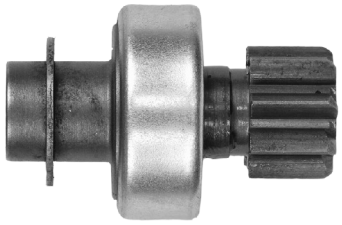

AS SD5012

ORIGINAL	CARGO		
M191T26171	133268	Tooth:	8
		Splines:	8
		Length:	71 mm
		O.D.	28 mm
		Shaft:	12.8 mm ACW

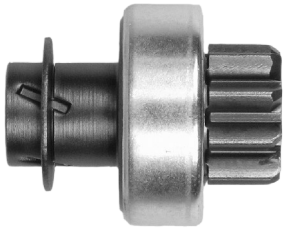

AS SD5013

ORIGINAL	CARGO		
M191T22271	133454	Tooth:	9
		Splines:	4
		Length:	56 mm
		O.D.	29.6 mm
		Shaft:	12 mm

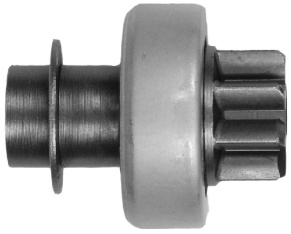

AS SD5014

ORIGINAL	CARGO		
M191T26771	134918	Tooth:	8
		Splines:	8
		Length:	56 mm
		O.D.	28.2 mm
		Shaft:	12 mm ACW

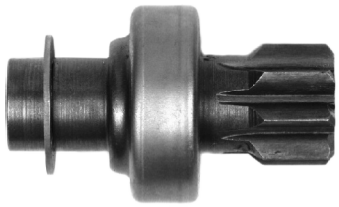

AS SD5015

ORIGINAL	CARGO		
M191T36571	134960	Tooth:	8
		Splines:	8
		Length:	73.7 mm
		O.D.	28.2 mm
		Shaft:	12.8 mm ACW

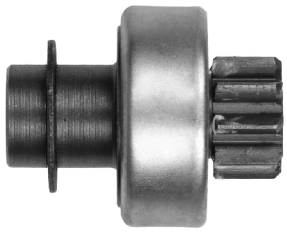

AS SD5016

ORIGINAL	CARGO		
M191T22471	135567	Tooth:	9
		Splines:	8
		Length:	56 mm
		O.D.	24.8 mm
		Shaft:	12 mm

AS SD5017

ORIGINAL	CARGO		
M191T13571	136145	Tooth:	9
		Splines:	8
		Length:	76.5 mm
		O.D.	29.5 mm
		Shaft:	11 mm

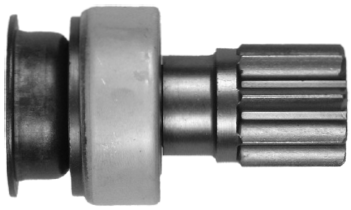

AS SD5018

ORIGINAL	CARGO		
M191T12571	136229	Tooth:	8
		Splines:	8
		Length:	75.5 mm
		O.D.	28.2 mm
		Shaft:	12 mm

STARTER DRIVES
MITSUBISHI

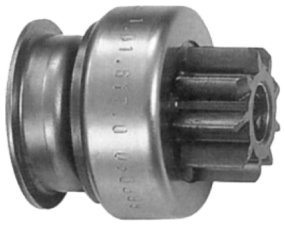

AS SD5019

ORIGINAL	CARGO
M191T12871	136602

Tooth:	9
Splines:	8
Length:	50 mm
O.D.	30 mm
Shaft:	12 mm

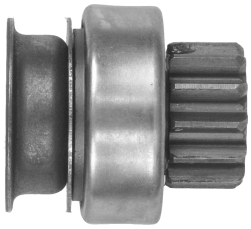

AS SD5020

ORIGINAL	CARGO
M191T13671	136722

Tooth:	12
Splines:	8
Length:	51 mm
O.D.	31.8 mm
Shaft:	12 mm

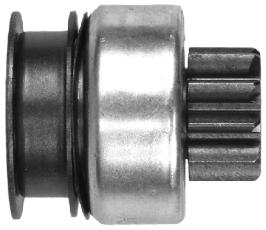

AS SD5021

ORIGINAL	CARGO
M191T12271	137643

Tooth:	10
Splines:	8
Length:	51 mm
O.D.	27.9 mm
Shaft:	12 mm

AS SD5022

ORIGINAL	CARGO
M191T68971	231341

Tooth:	9
Splines:	8
Length:	51 mm
O.D.	35.5 mm
Shaft:	13 mm

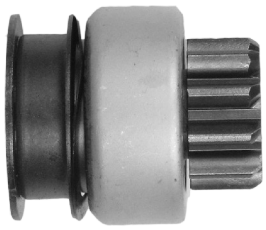

AS SD5023

ORIGINAL	CARGO
M191T15071	139541

Tooth:	10
Splines:	8
Length:	51.2 mm
O.D.	31.2 mm
Shaft:	13 mm

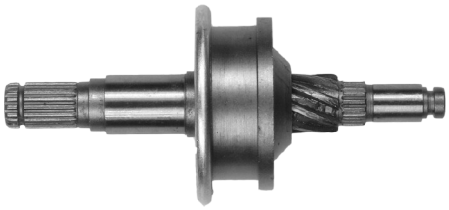

AS SD5024

ORIGINAL	CARGO
M357T70171	132386

Tooth:	
Splines:	18
Length:	110/123 mm
O.D.	
Shaft:	

AS SD5025

ORIGINAL	CARGO
M191T12971	137218

Tooth:	9
Splines:	8
Length:	74 mm
O.D.	29.3 mm
Shaft:	

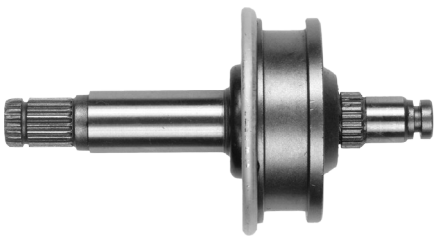

AS SD5026

ORIGINAL	CARGO
M357T72671	133449

Tooth:	
Splines:	20
Length:	126/144 mm
O.D.	
Shaft:	

AS SD5027

ORIGINAL	CARGO
M357T61671	134966

Tooth:	
Splines:	20
Length:	116/134 mm
O.D.	
Shaft:	

STARTER DRIVES
MITSUBISHI

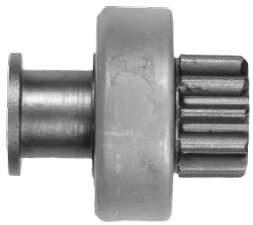

AS SD5028

ORIGINAL	CARGO		
M191T57081	133520	Tooth:	11
		Splines:	10
		Length:	65.5 mm
		O.D.	34 mm
		Shaft:	14 mm

AS SD5029

ORIGINAL	CARGO		
M191X68171	232229	Tooth:	
		Splines:	5
		Length:	91.5 mm
		O.D.	
		Shaft:	18.6 mm

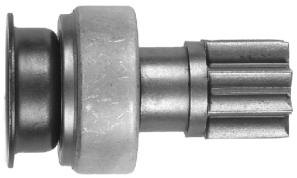

AS SD5030

ORIGINAL	CARGO		
M191T16971	136923	Tooth:	8
		Splines:	8
		Length:	76 mm
		O.D.	28 mm
		Shaft:	12 mm ACW

AS SD5031

ORIGINAL	CARGO		
M357T73171	133448	Tooth:	
		Splines:	20
		Length:	118/131 mm
		O.D.	
		Shaft:	

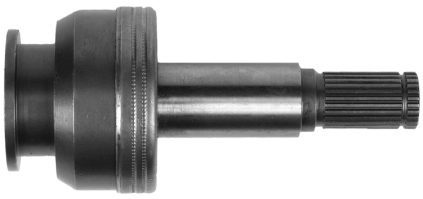

AS SD5032

ORIGINAL	CARGO		
M191X69771	234774	Tooth:	
		Splines:	5
		Length:	135 mm
		O.D.	18.9 mm
		Shaft:	24.9 mm

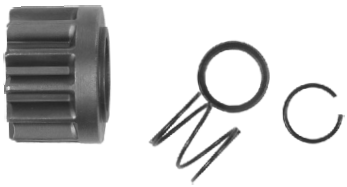

AS SD5033

ORIGINAL	CARGO		
M605X71971	234808	Tooth:	12
		Splines:	26
		High:	32 mm
		O.D.	46 mm
		Shaft:	

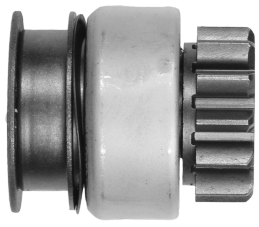

AS SD5034

ORIGINAL	CARGO		
M191X68471	231415	Tooth:	12
		Splines:	8
		Length:	51 mm
		O.D.	37.5 mm
		Shaft:	13 mm

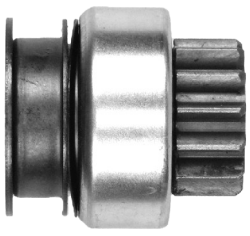

AS SD5035

ORIGINAL	CARGO		
M191T19271	234514	Tooth:	13
		Splines:	8
		Length:	50.3 mm
		O.D.	34 mm
		Shaft:	12 mm

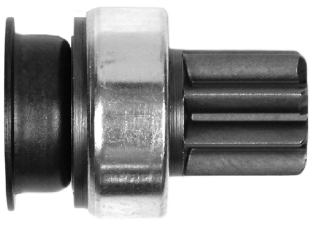

AS SD5036

ORIGINAL	CARGO		
M191T12671	137764	Tooth:	8
		Splines:	8
		Length:	64.2 mm
		O.D.	28 mm
		Shaft:	11.6 mm

STARTER DRIVES
MITSUBISHI

AS SD5037

ORIGINAL **CARGO**
M357T73571 **233845**

Tooth:	
Splines:	20
Length:	158 mm
O.D.	66 mm
Shaft:	

AS SD5038

ORIGINAL
M191X94071
M191T94071

GHIBAUDI
6024

Tooth:	26
Splines:	6
Length:	134 mm
O.D.	19 mm
Shaft:	24.5 mm

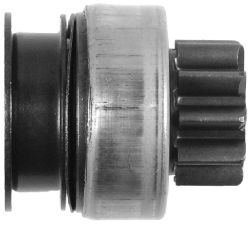

AS SD5039

ORIGINAL **CARGO**
M191T14271 **231952**
M191T76081

Tooth:	10
Splines:	8
Length:	51.5 mm
O.D.	33 mm
Shaft:	12 mm CW

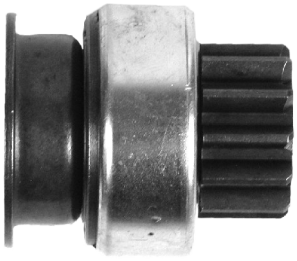

AS SD5040

for M1T85781

Tooth:	12
Splines:	8
Length:	51 mm
O.D.	31 mm
Shaft:	12 mm

STARTER DRIVES
NIPPONDENSO

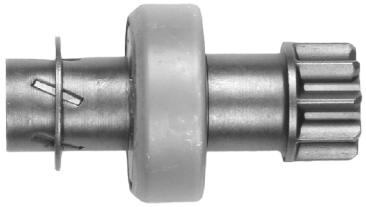

AS SD6001

ORIGINAL	CARGO
028300-1690	130441
028300-0541	
028300-0801	

Tooth:	9
Splines:	10
Length:	86 mm
O.D.	29.7 mm
Shaft:	12.5 mm

AS SD6002

ORIGINAL	CARGO
028300-1951	130442
028300-1930	
028300-1950	

Tooth:	9
Splines:	10
Length:	82 mm
O.D.	28.8 mm
Shaft:	12.5 mm

AS SD6003

ORIGINAL	CARGO
028300-1791	132004

Tooth:	9
Splines:	
Length:	102.4 mm
O.D.	29 mm
Shaft:	

AS SD6004

ORIGINAL	CARGO
028300-4320	132547

Tooth:	8
Splines:	10
Length:	82 mm
O.D.	24.8 mm
Shaft:	12.5 mm ACW

AS SD6005

ORIGINAL	CARGO
028300-1841	132863

Tooth:	9
Splines:	
Length:	100/102 mm
O.D.	32.5 mm
Shaft:	

AS SD6006

ORIGINAL	CARGO
028300-2011	132942

Tooth:	11
Splines:	
Length:	147 mm
O.D.	41 mm
Shaft:	

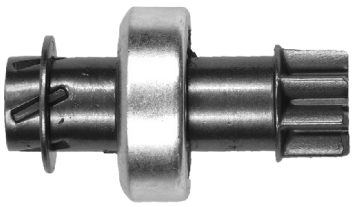

AS SD6007

ORIGINAL	CARGO
028300-3880	133441

Tooth:	8
Splines:	10
Length:	82 mm
O.D.	28.2 mm
Shaft:	12.5 mm ACW

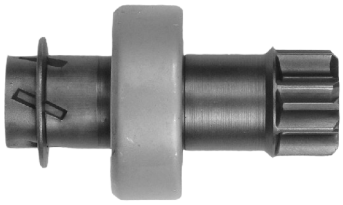

AS SD6008

ORIGINAL	CARGO
028300-3570	133631

Tooth:	8
Splines:	10
Length:	82.5 mm
O.D.	28 mm
Shaft:	12.5 mm

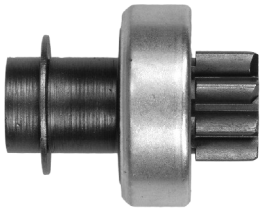

AS SD6009

ORIGINAL	CARGO
028300-4390	133712

Tooth:	8
Splines:	5
Length:	60.4 mm
O.D.	27.6 mm
Shaft:	12.5 mm

STARTER DRIVES
NIPPONDENSO

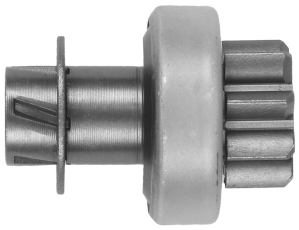

AS SD6010

ORIGINAL	CARGO
028300-5040	133805

Tooth:	8
Splines:	5
Length:	53.6 mm
O.D.	25.8 mm
Shaft:	11 mm

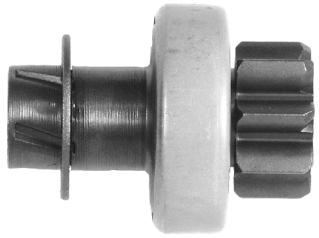

AS SD6011

ORIGINAL	CARGO
028300-4350	134961

Tooth:	8
Splines:	10
Length:	78 mm
O.D.	28.2 mm
Shaft:	11 mm

AS SD6012

ORIGINAL	CARGO
028300-2200	135002

Tooth:	9
Splines:	
Length:	102.6 mm
O.D.	33.5 mm
Shaft:	

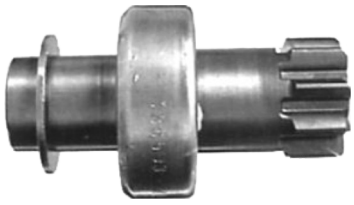

AS SD6013

ORIGINAL	CARGO
028300-3321	135593

Tooth:	9
Splines:	10
Length:	82 mm
O.D.	29.7 mm
Shaft:	12.5 mm
	ACW

AS SD6014

ORIGINAL	CARGO
028300-5800	135651

Tooth:	8
Splines:	5
Length:	74 mm
O.D.	28.2 mm
Shaft:	11 mm
	ACW

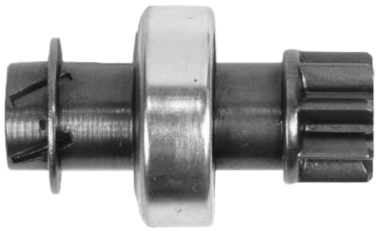

AS SD6015

ORIGINAL	CARGO
028300-4190	135889

Tooth:	8
Splines:	5
Length:	78 mm
O.D.	28 mm
Shaft:	11 mm
	ACW

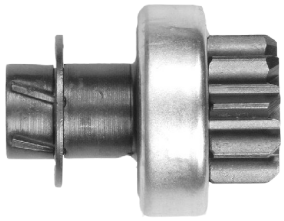

AS SD6016

ORIGINAL	CARGO
028300-6070	136086

Tooth:	9
Splines:	5
Length:	53.4 mm
O.D.	29.3 mm
Shaft:	11 mm

AS SD6017

ORIGINAL	CARGO
028300-5730	136794

Tooth:	8
Splines:	5
Length:	75.7 mm
O.D.	24.8 mm
Shaft:	
	ACW

AS SD6018

ORIGINAL	CARGO
028300-4011	136796

Tooth:	10
Splines:	
Length:	102.5 mm
O.D.	37.5 mm
Shaft:	

STARTER DRIVES
NIPPONDENSO

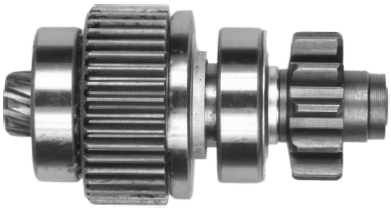

AS SD6019

ORIGINAL	CARGO
028099-2700	137293

Tooth:	11
Splines:	
Length:	102.5 mm
O.D.	40.2 mm
Shaft:	

AS SD6020

ORIGINAL	CARGO
028300-2040	138566

Tooth:	13
Splines:	
Length:	146.6 mm
O.D.	39.2 mm
Shaft:	

AS SD6021

ORIGINAL	CARGO
128099-5160	138567

Tooth:	12
Splines:	
Length:	146.5 mm
O.D.	45 mm
Shaft:	

AS SD6022

ORIGINAL	CARGO
028300-7920	139845

Tooth:	9
Splines:	
Length:	82 mm
O.D.	33.5 mm
Shaft:	

AS SD6023

ORIGINAL	CARGO
28300-5490	132864

Tooth:	11
Splines:	
Length:	102.3 mm
O.D.	29 mm
Shaft:	

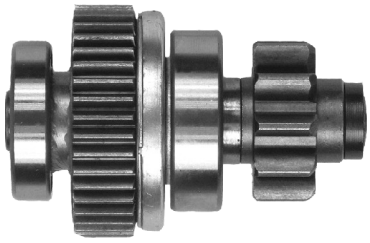

AS SD6024

ORIGINAL	CARGO
028300-7700	139653

Tooth:	10
Splines:	
Length:	83 mm
O.D.	36.3mm
Shaft:	

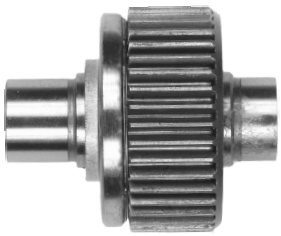

AS SD6025

ORIGINAL	CARGO
028300-2081	134806

Tooth:	40
Splines:	
Length:	64 mm
O.D.	
Shaft:	

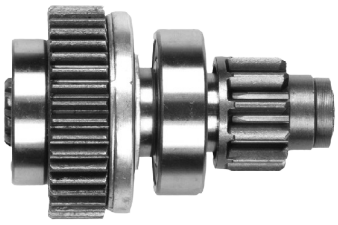

AS SD6026

ORIGINAL	CARGO
028300-6860	137950

Tooth:	11
Splines:	
Length:	83 mm
O.D.	29.3 mm
Shaft:	

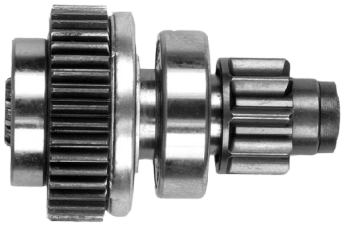

AS SD6027

ORIGINAL	CARGO
028300-6990	137753

Tooth:	9
Splines:	
Length:	83 mm
O.D.	29 mm
Shaft:	

STARTER DRIVES
NIPPONDENSO

AS SD6028

ORIGINAL	CARGO		
028301-0010	230857	Tooth:	
		Splines:	
		Length:	52 mm
		O.D.	54 mm
		Shaft:	

AS SD6029

ORIGINAL	CARGO		
028300-6690	233451	Tooth:	10
028300-6691		Splines:	
		Length:	147 mm
		O.D.	40 mm
		Shaft:	

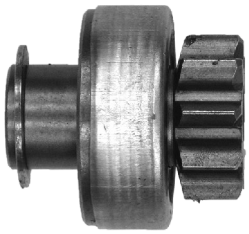

AS SD6030

CARGO		
237990	Tooth:	9
	Splines:	10
	Length:	53.3 mm
	O.D.	35.5 mm
	Shaft:	

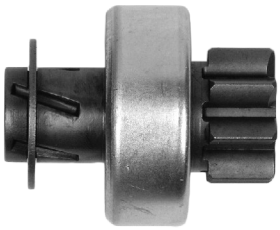

AS SD6031

ORIGINAL	CARGO		
028300-6680	137751	Tooth:	8
		Splines:	5
		Length:	53.5 mm
		O.D.	28.2 mm
		Shaft:	11 mm

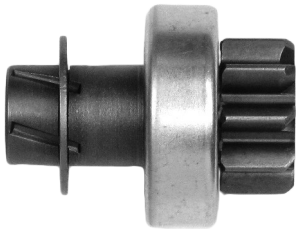

AS SD6032

ORIGINAL	CARGO		
028300-5400	234402	Tooth:	9
		Splines:	5
		Length:	53.5 mm
		O.D.	29 mm
		Shaft:	11 mm
			CW

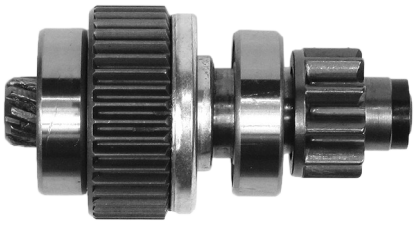

AS SD6033

ORIGINAL	CARGO		
028300-6190	233179	Tooth:	10
		Splines:	10
		Length:	102 mm
		O.D.	33 mm
		Shaft:	
			CW

AS SD6034

for:		
63187051	Tooth:	11
428000-3180	Splines:	10
428000-4920	Length:	50.5 mm
28100-0G040	O.D.	39 mm
	Shaft:	12 mm

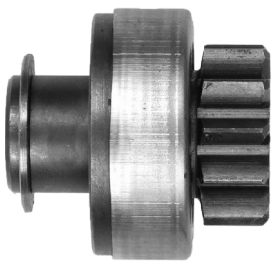

AS SD6035

for:		
428000-0660	Tooth:	11
	Splines:	10
	Length:	50.5 mm
	O.D.	35 mm
	Shaft:	12 mm

STARTER DRIVES
OTHER

AS SD9001

ORIGINAL	CARGO		
2108-37086	131212	Tooth:	11
		Splines:	6
		Length:	67 mm
		O.D.	29.5 mm
		Shaft:	14 mm
			ACW

AS SD9002

ORIGINAL	CARGO		
443937150171	132941	Tooth:	9
		Splines:	12
		Length:	79.5 mm
		O.D.	24.9 mm
		Shaft:	12.5 mm
			ACW

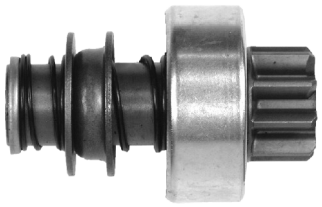

AS SD9003

ORIGINAL	CARGO		
443930154220	133961	Tooth:	9
		Splines:	12
		Length:	91.4 mm
		O.D.	36 mm
		Shaft:	

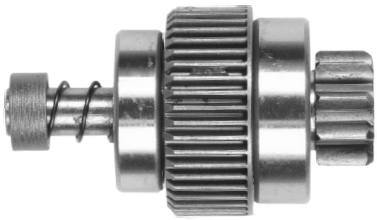

AS SD9004

ORIGINAL	CARGO		
443937150860	136267	Tooth:	9
		Splines:	
		Length:	76 mm
		O.D.	25.6 mm
		Shaft:	
			ACW

AS SD9005

ORIGINAL	CARGO		
10670-F7RU	139341	Tooth:	13
		Splines:	12
		Length:	47 mm
		O.D.	46.6 mm
		Shaft:	12 mm

AS SD9006

ORIGINAL	CARGO		
16.901.752	230280	Tooth:	11
		Splines:	10
		Length:	82.5 mm
		O.D.	40.5 mm
		Shaft:	

AS SD9007

CARGO		
233830	Tooth:	12
	Splines:	12
	Length:	48 mm
	O.D.	38 mm
	Shaft:	12 mm
		ACW

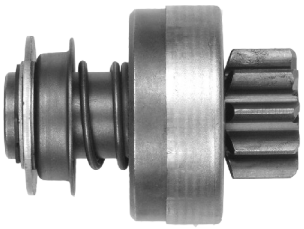

AS SD9008

CARGO		
234270	Tooth:	10
	Splines:	10
	Length:	82 mm
	O.D.	37.6 mm
	Shaft:	14.3 mm

Repl. MAN (ISKRA)

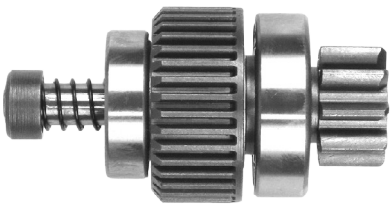

AS SD9009

MAGNETON		
443937152070	Tooth:	9
	Splines:	
	Length:	107.5 mm
	O.D.	34 mm
	Shaft:	

Repl. Daewoo Lublin

STARTER DRIVES
OTHER

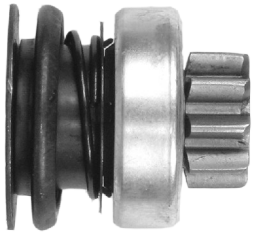

AS SD9010

Tooth:	9
Splines:	5
Length:	49.5 mm
O.D.	28.5 mm
Shaft:	14 mm

AS SD9011

Tooth:	9
Splines:	5
Length:	49.5 mm
O.D.	24.8 mm
Shaft:	12 mm

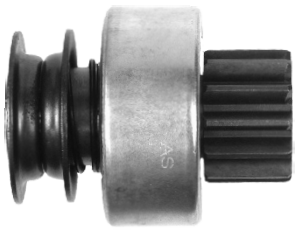

AS SD9012

ORIGINAL	CARGO		
1-23500-0170	132519	Tooth:	12
		Splines:	15
		Length:	96.8 mm
		O.D.	46.4 mm
		Shaft:	19.3 mm

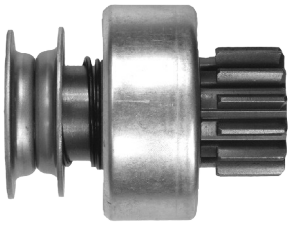

AS SD9013

ORIGINAL	CARGO		
1-23500-0190	135693	Tooth:	13
		Splines:	16
		Length:	97.6 mm
		O.D.	46.2 mm
		Shaft:	

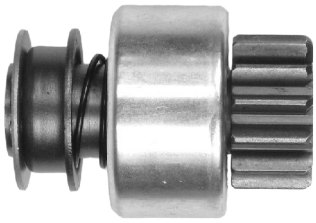

AS SD9014

ORIGINAL	CARGO		
1-23500-0250	133393	Tooth:	13
		Splines:	12
		Length:	91 mm
		O.D.	46.7 mm
		Shaft:	

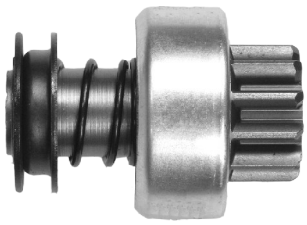

AS SD9015

ORIGINAL	CARGO		
023500-0523	132515	Tooth:	11
		Splines:	12
		Length:	82 mm
		O.D.	40.5 mm
		Shaft:	

AS SD9016

ORIGINAL	CARGO		
E90Z11350A	136633	Tooth:	10
		Splines:	12
		Length:	47 mm
		O.D.	27.94 mm
		Shaft:	12 mm

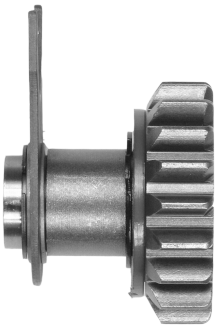

AS SD9017

	CARGO		
	234504	Tooth:	19
		Splines:	
		Length:	46.2 mm
		O.D.	54.3 mm
		Shaft:	12 mm

AS SD9018

Repl. R10, R11 (ELMOT)		Tooth:	11
		Splines:	10
		Length:	91 mm
		O.D.	40 mm
		Shaft:	14 mm

STARTER DRIVES
OTHER

AS SD9019

ORIGINAL
R10, R11

Tooth: 9

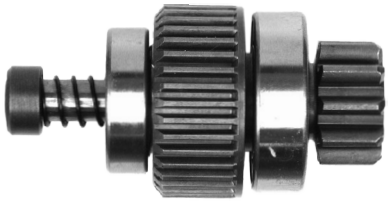

AS SD9020

MAGNETON **CARGO**
7153180 **231679**

Tooth: 10
Length: 107.45 mm
O.D. 36 mm

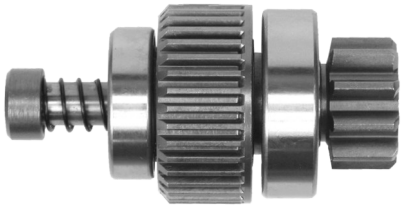

AS SD9021

FOR S9022

Tooth: 10
Length: 107.45 mm
O.D. 36 mm

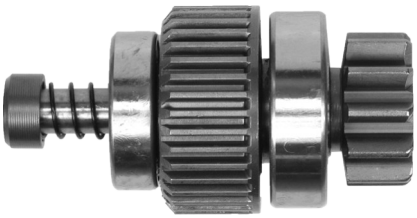

AS SD9022

FOR S9024

Tooth: 11
Length: 107.7 mm
O.D. 40.5 mm

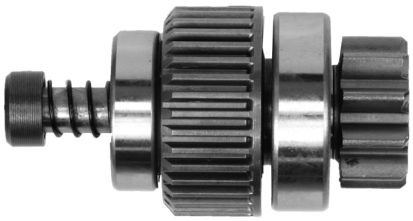

AS SD9023

FOR S9023

Tooth: 10
Length: 105.5 mm
O.D. 40 mm

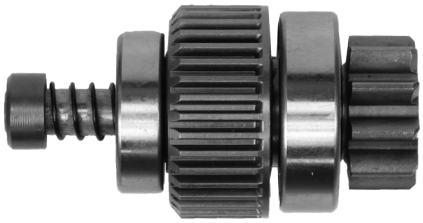

AS SD9024

FOR S9021

Tooth: 10
Length: 105.5 mm
O.D. 40 mm

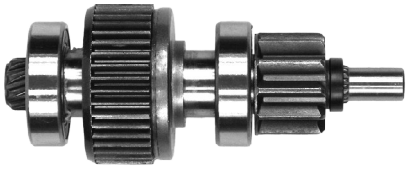

AS SD9025

FOR S9003

Tooth: 11
Length: 133.5 mm
O.D. 34.4 mm

AS SD9026

FOR PG260NA

Tooth: 9
Splines: 6
Length: 61.4 mm
O.D. 34 mm
Shaft: 12 mm

AS SD9027

CARGO
234135

Tooth: 11
Splines: 6
Length: 47 mm
O.D. 34.2 mm
Shaft: 12 mm

STARTER DRIVES
OTHER

AS SD9028

ORIGINAL	CARGO
7150401	134302

Tooth:	9
Splines:	12
Length:	78.8 mm
O.D.	29.2 mm
Shaft:	12.6 mm

AS SD9029

ORIGINAL	CARGO
SD341	231960
F2VY-11350-A	

Tooth:	12
Splines:	12
Length:	47 mm
O.D.	31.8 mm
Shaft:	12 mm

AS SD9030

ORIGINAL	CARGO
31204-PD1-003	134284

Tooth:	9
Splines:	
Length:	98.3 mm
O.D.	28.8 mm
Shaft:	
	CW

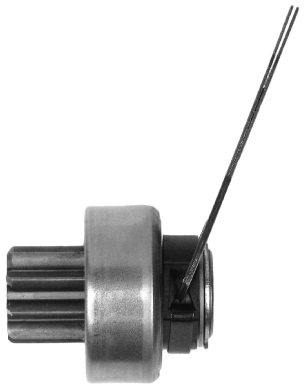

AS SD9031

ORIGINAL	CARGO
2110-3708620	233993

Tooth:	9
Splines:	
Length:	52.5 mm
O.D.	25 mm
Shaft:	12 mm
	ACW

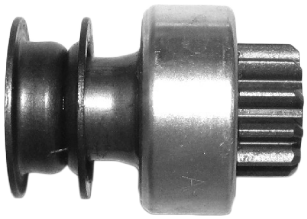

AS SD9032

ORIGINAL
16.900.035

Tooth:	11
Splines:	12
Length:	62 mm
O.D.	29 mm
Shaft:	
	ACW

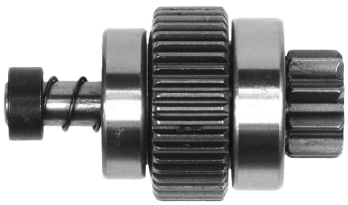

AS SD9033

Tooth:	9
Length:	78.5 mm
O.D.	25 mm

for MAGNETON 9141322 CW

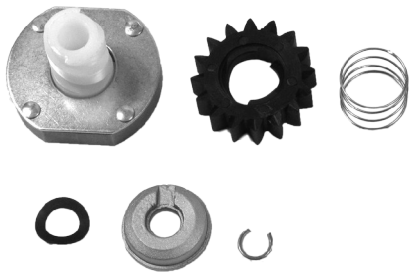

AS SD9034

ORIGINAL	CARGO
497606	230400

Tooth:	16
Length:	11.50 mm
O.D.	41 mm

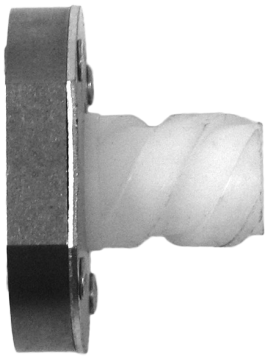

AS SD9035

ORIGINAL	CARGO
398003	234211
391135	
692024	

Length:	36 mm
O.D.	50 / 17 mm

STARTER FIELD COILS
BOSCH

AS SF0001

ORIGINAL **CARGO** 24 V
2004114168 **130127** 4.0 kW

H. 127.00, **Brush gear** w/o

AS SF0002

ORIGINAL **CARGO** 12 V
2004114169 **130128** 3.0 kW

H. 133.50, **Brush gear** w/o

AS SF0003

ORIGINAL **CARGO** 24 V
2004125075 **130131** 5.0 kW
2004125080

H. 120.50, **Brush gear** w/o

AS SF0004

ORIGINAL **CARGO** 24 V
2004114065 **131074** 4.0 kW

H. 127.60, **Brush gear** w/o

AS SF0005

ORIGINAL **CARGO** 24 V
2004105076 **131312** 5.5/6.6 kW
2004125083

H. 138.25, **Brush gear** w/o

AS SF0006

ORIGINAL **CARGO** 12 V
2004114145 **131314** 2.3/2.7 kW

H. 113.55, **Brush gear** w/o

AS SF0007

ORIGINAL **CARGO** 12 V
1004112906 **132585** 2.2 kW

H. 83.09, **Brush gear** w/o

AS SF0008

SF0007 + brush holder 12 V
2.2 kW

H. 83.09

AS SF0009

CARGO **ORIGINAL** 12 V
137622 **1005001976** 1.8/2.2 kW

O.D. 78.20, **L.** 124.60, **Brush gear** w/o, **Magnets** With

STARTER FIELD COILS
BOSCH

AS SF0010

CARGO **ORIGINAL** 12 V
138323 **1005001942** 1.6/2.0/2.1 kW

O.D. 78.20, **L.** 124.60, **Brush gear** w/o, **Magnets** With

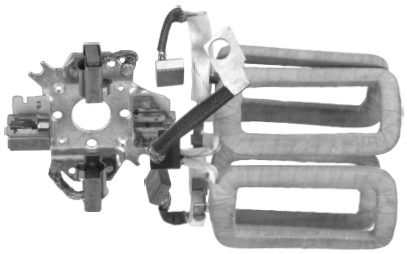

AS SF0011

SF0004 + brush holder 24 V
4.0 kW

H. 127.60

AS SF0012

ORIGINAL **CARGO** 12 V
1005001905 **137729** 1.7/1.8 kW

O.D. 79.00, **L.** 135.00, **Brush gear** w/o, **Magnets** With

AS SF0013

ORIGINAL **CARGO** 12 V
1005001904 **233663** 1.7/1.8 kW

O.D. 79.55, **L.** 135.00, **Brush gear** w/o, **Magnets** With

AS SF0014

ORIGINAL **CARGO** 24 V
2004124005 **231085** 6.2 kW
2004124006

H. 129.70, **Brush gear** w/o

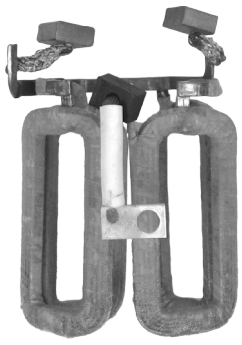

AS SF0015

ORIGINAL **CARGO** 12 V
2004114060 **131134** 3 kW

H. 128.30, **Brush gear** w/o

AS SF0016

ORIGINAL **CARGO** 24 V
6033AD0128 **139697** 4 kW
6033AD0151

O.D. 95.30, **L.** 121.00, **Brush gear** with, **Magnets** w/o

AS SF0017

ORIGINAL **CARGO** 12 V
1005001826 **137897** 1.8/2.0 kW
1005001843

O.D. 78.25, **L.** 124.65, **Brush gear** w/o, **Magnets** With

AS SF0018

CARGO **ORIGINAL** 24 V
230841 **2004124001** 6.7 kW
9001453717

H. 150.80

STARTER FIELD COILS
BOSCH

AS SF0019

ORIGINAL CARGO 12 V
6033AD0007 233922 2.3 kW

O.D. 85.70, **L.** 98.90, **Brush gear** with
SF0020 + Brush holder

AS SF0020

ORIGINAL CARGO 12 V
6033AD0007 233922 2.3 kW

O.D. 85.70, **L.** 98.90, **Brush gear** w/o

STARTER FIELD COILS
DELCO/VALEO

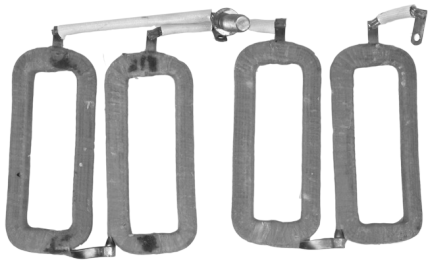

AS SF1001

ORIGINAL **CARGO** 12/24 V
1945496 **130495**

H. 139.70, **Brush gear** w/o

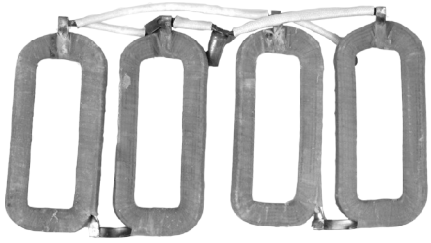

AS SF1002

ORIGINAL **CARGO** 12 V
1988442 **131351**

H. 144.60, **Brush gear** w/o

AS SF3001

ORIGINAL **CARGO** 12 V
594534 **137399** 1.1 kW

O.D. 63.55, **L.** 96.25, **Brush gear** w/o, **Magnets** With

AS SF3002

ORIGINAL **CARGO** 12 V
182594 **138857** 1.4/1.7 kW

H. 60.15, **Brush gear** w/o

AS SF4001

ORIGINAL **CARGO** 12 V
83226564 **139625** 2.6 kW
083226564010

O.D. 94.50, **L.** 72.25
Field Coil + Yoke

STARTER FIELD COILS
MITSUBISHI

AS SF5001

CARGO		24 V
236436		5.5 kW

for M9T60471

AS SF5002

ORIGINAL	**CARGO**	24 V
M800T43571	**136938**	3.2 kW
M800T47371		

O.D. 81.00, **L.** 85.00

AS SF5003

ORIGINAL	**CARGO**	24 V
M800T46371	**231772**	5 kW
ME700992		

O.D. 80.65, **L.** 101.60

AS SF5004

ORIGINAL	**CARGO**	24 V
M800X70772	**234266**	3.2 kW
M800X70787		

O.D. 81.65, **L.** 71.60

AS SF5005

ORIGINAL	**CARGO**	12 V
M800T35171	**135784**	2 kW
M800T43972		

O.D. 81.50 **L.** 75.60

STARTER GEARS
BOSCH

AS SG0001

ORIGINAL **CARGO**
1005821300 **131503**
1005821307

O.D. 69.67, **I.D.** 46.75, **H.** 37.90,
No. of teeth 37

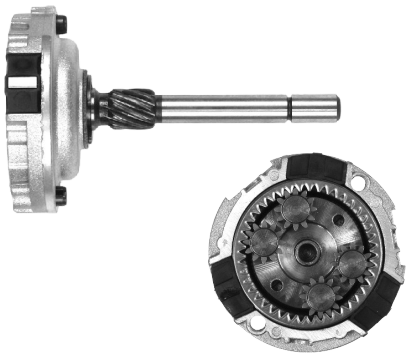

AS SG0002

ORIGINAL **CARGO**
9001140362 **131990**

L. 140.90, **Splines** 10

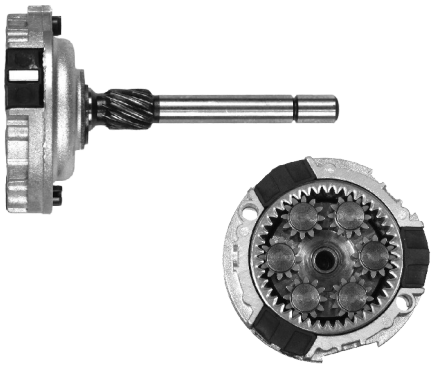

AS SG0003

ORIGINAL **CARGO**
1006200050 **131991**

L. 143.55, **Splines** 10

AS SG0004

ORIGINAL **CARGO**
1005821303 **132123**

O.D. 74.00, **I.D.** 52.50, **H.** 40.50,
No. of teeth 42

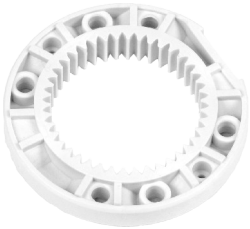

AS SG0005

ORIGINAL **CARGO**
9001140322 **132604**

O.D. 86.00, **I.D.** 52.00, **H.** 14.25,
No. of teeth 42

AS SG0006

ORIGINAL **CARGO**
1005821308 **133466**

O.D. 69.50, **I.D.** 18.00, **H.** 28.20

AS SG0007

ORIGINAL **CARGO**
1005821306 **133467**

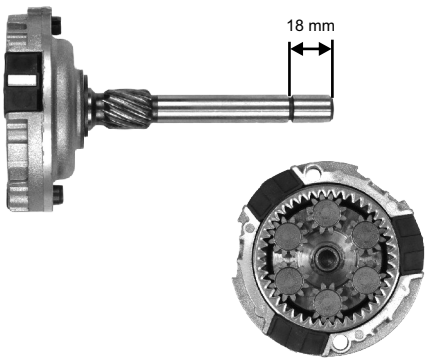

AS SG0008

ORIGINAL **CARGO**
9001337056 **135072**

L. 144.60, **Splines** 10

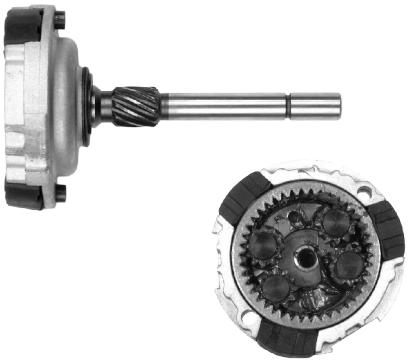

AS SG0009

ORIGINAL **CARGO**
9001337057 **135073**

L. 144.80, **Splines** 10

STARTER GEARS
BOSCH

AS SG0010

ORIGINAL **CARGO**
1005821312 **135078**

O.D. 69.20, **I.D.** 46.75, **H.** 28.80,
No. of teeth 37

AS SG0011

ORIGINAL **CARGO**
1005821313 **135079**

O.D. 73.30, **I.D.** 53.00, **H.** 33.60,
No. of teeth 42

AS SG0012

ORIGINAL **CARGO**
1005821328 **135970**

O.D. 70.00, **I.D.** 17.90, **H.** 25.20

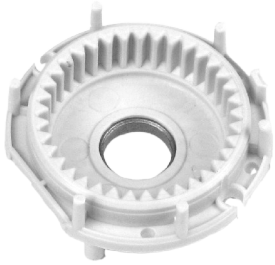

AS SG0013

CARGO
137812

O.D. 69.65, **I.D.** 46.90, **H.** 32.00,
No. of teeth 37

AS SG0014

ORIGINAL **CARGO**
1005821321 **138991**

O.D. 69.30, **I.D.** 44.65, **H.** 28.70,
No. of teeth 36

AS SG0015

ORIGINAL **CARGO**
1005821333 **139143**

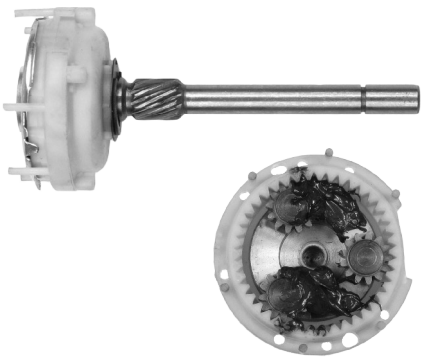

AS SG0016

ORIGINAL **CARGO** ACW
1006200012 **135598**

L. 160.95, **Splines** 10

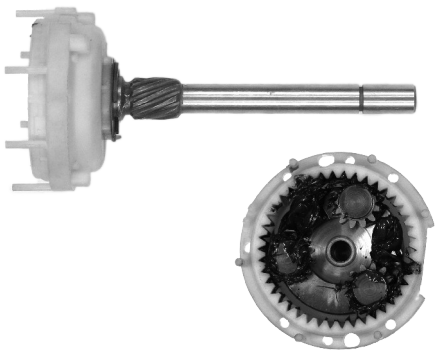

AS SG0017

ORIGINAL **CARGO**
1006200006 **133456**

L. 136.60, **Splines** 10

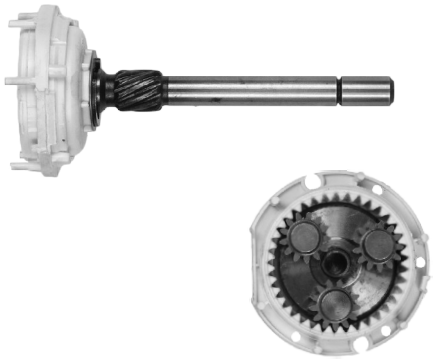

AS SG0018

ORIGINAL **CARGO** ACW
1006200030 **135841**

L. 148.10, **Splines** 10

STARTER GEARS
BOSCH

AS SG0019

CARGO
233497

O.D. 73.45, **I.D.** 48.75, **H.** 32.50,
No. of teeth 38

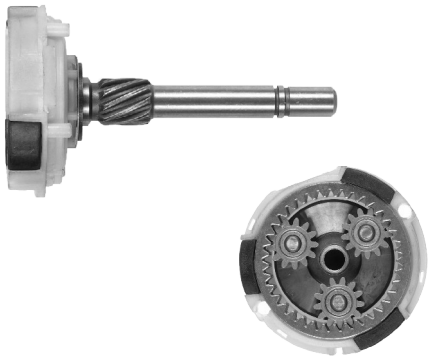

AS SG0020

ORIGINAL **CARGO** ACW
1006200043 **135601**
1006200128

L. 124.35, **Splines** 10

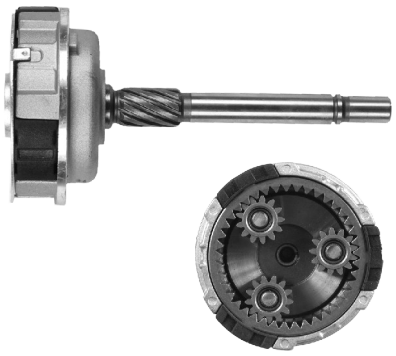

AS SG0021

ORIGINAL **CARGO**
6033AD0063 **234375**

L. 142.00, **Splines** 16

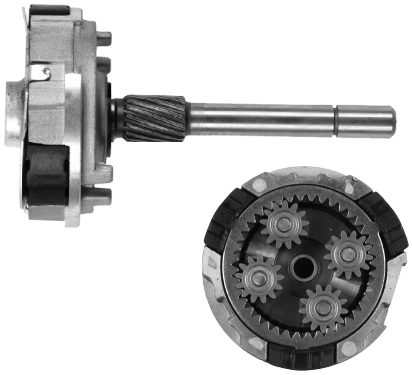

AS SG0022

ORIGINAL **CARGO**
9001336244 **231083**
6033AD3310

L. 180.25, **Splines** 10

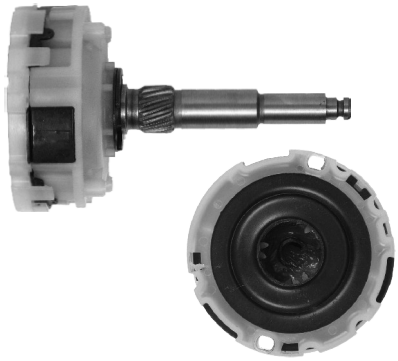

AS SG0023

ORIGINAL **CARGO**
1006200117 **137464**

L. 109.65, **Splines** 16, **Rotation** ACW

AS SG0024

ORIGINAL
1006200923

AS SG0025

ORIGINAL
6033AD5173

STARTER GEARS
VALEO

AS SG3001

CARGO
133954

O.D. 80.15, **H.** 24.60, **No. of teeth** 59

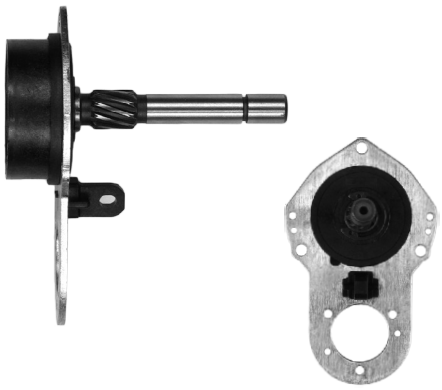

AS SG3002

ORIGINAL	**CARGO**	Splines 10
594538	**135081**	Drive 10 or 5 splines

FOR 13 TEETH ARMATURE

AS SG3003

FOR 8 TEETH ARMATURE

AS SG3004

ORIGINAL	**CARGO**
594152	**235498**

L. 129.54, **Splines** 9

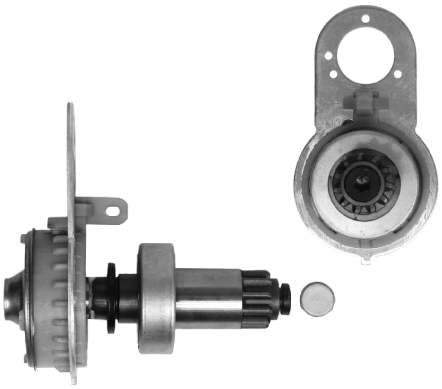

AS SG3005

ORIGINAL	**CARGO**	ACW
594395	**234387**	
594699		

L. 131,8/144,8, **Splines** 9

AS SG3006

ORIGINAL	**CARGO**
594141	**135388**

L. 126.70, **Splines** 9

STARTER GEARS
MAGNETI/OTHER

AS SG4001

ORIGINAL **54293830**
CARGO **133618**

O.D. 61.70, **I.D.** 51.85, **H.** 27.70,
No. of teeth 40

AS SG4002

ORIGINAL **54293375**
CARGO **135121**

O.D. 61.00, **I.D.** 48.00, **H.** 27.60,
No. of teeth 39

AS SG4003

ORIGINAL **54294580**
CARGO **232604**

O.D. 61.20, **I.D.** 47.25, **H.** 25.25,
No. of teeth 37

AS SG9001

ORIGINAL **E90Z11A165A**
CARGO **136638**

O.D. 72.35, **I.D.** 46.87, **H.** 30.40,
No. of teeth 37

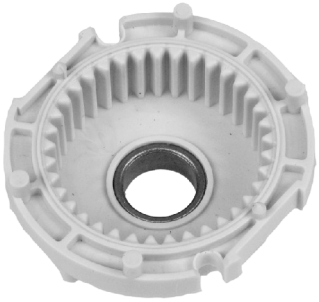

AS SG9002

ORIGINAL **F7RE-11A165-CA**
CARGO **231347**

O.D. 72.28, **I.D.** 52.10

AS SG9003

ORIGINAL **F7RE-11Q165-CA**
CARGO **235726**
ACW

L. 108.10, **Splines** 12

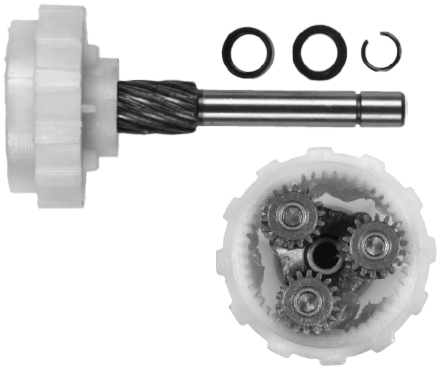

AS SG9004

for PG260NA

STARTER SOLENOIDS
BOSCH

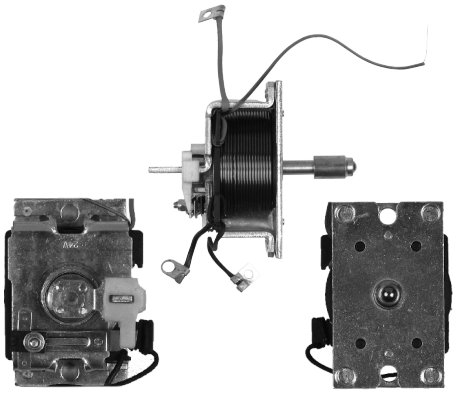

AS SS0001

ORIGINAL **CARGO** 24 V
0331450001 **130304**

B+ Cable

In offer also:
SS0001(OEM)

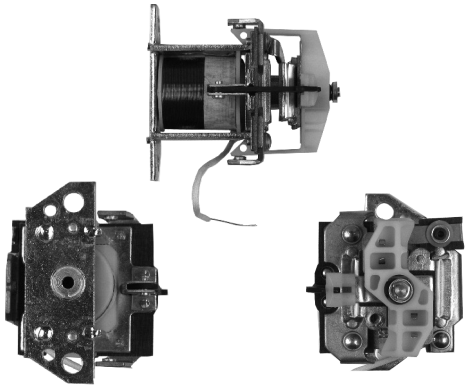

AS SS0002

ORIGINAL **CARGO** 24 V
0331101006 **133554**

In offer also:
SS0002(OEM)

AS SS0003

ORIGINAL **CARGO** 12 V
0331402001 **130301**

B+ M8, **Coil bolt** M8

AS SS0004

ORIGINAL **CARGO** 24 V
0331402010 **130303**

B+ M10, **Coil bolt** M10

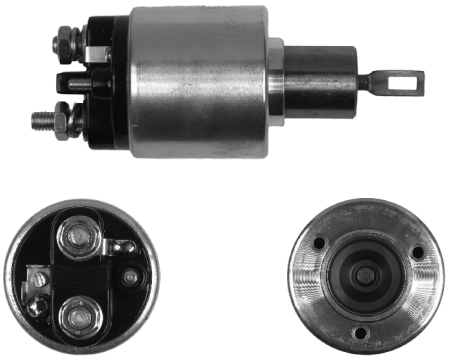

AS SS0005

ORIGINAL **CARGO** 12 V
0331303005 **130475**

B+ M8, **Coil bolt** M8

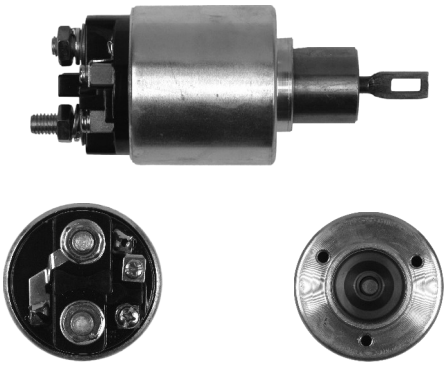

AS SS0006

ORIGINAL **CARGO** 12 V
0331303003 **130476**

B+ M8, **Coil bolt** M8

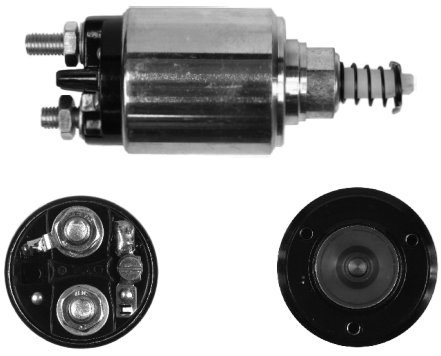

AS SS0007

ORIGINAL **CARGO** 12 V
0331402013 **131042**

B+ M10, **Coil bolt** M10

AS SS0008

ORIGINAL **CARGO** 24 V
0331402005 **131053**

B+ M10, **Coil bolt** M10

AS SS0009

ORIGINAL **CARGO** 12 V
0331402006 **131141**

B+ M10, **Coil bolt** 3

STARTER SOLENOIDS
BOSCH

AS SS0010

ORIGINAL **CARGO** 12 V
0331303002 **131586**

B+ M8, **Coil bolt** M8

In offer also:
SS0010(OEM)

AS SS0011

ORIGINAL **CARGO** 12 V
0331303006 **131143**

B+ M8, **Coil bolt** M8

In offer also:
SS0011(OEM)

AS SS0012

ORIGINAL **CARGO** 12 V
0331303055 **133421**

B+ M8, **Coil bolt** M8

In offer also:
SS0012(OEM)

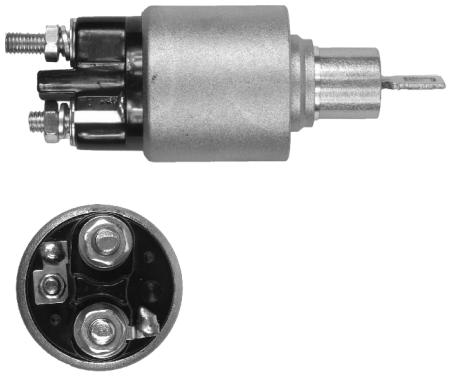

AS SS0013

ORIGINAL **CARGO** 12 V
2339304008 **137612**

B+ M8, **Coil bolt** M8

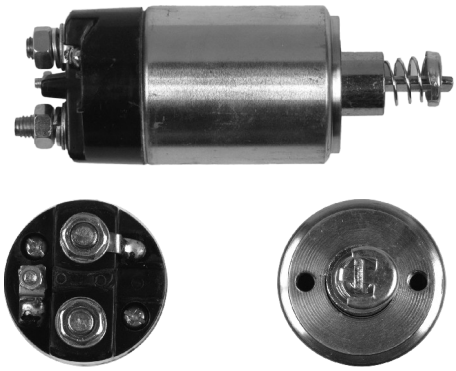

AS SS0014

ORIGINAL **CARGO** 12 V
0331302096 **133428**

B+ M8, **Coil bolt** M8

AS SS0015

ORIGINAL **CARGO** 12 V
0331402003 **130302**

B+ M8, **Coil bolt** M8

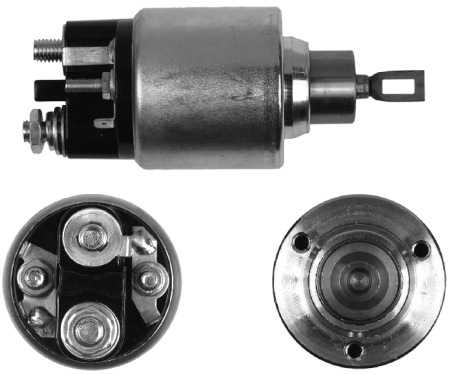

AS SS0016

ORIGINAL **CARGO** 12 V
2339304005 **137879**

B+ M8, **Coil bolt** M8

AS SS0017

ORIGINAL **CARGO** 12 V
0331303147 **134824**

B+ M8, **Coil bolt** M8

In offer also:
SS0017(OEM)

AS SS0018

ORIGINAL **CARGO** 12 V
0331303140 **138971**

B+ M8, **Coil bolt** M8

STARTER SOLENOIDS
BOSCH

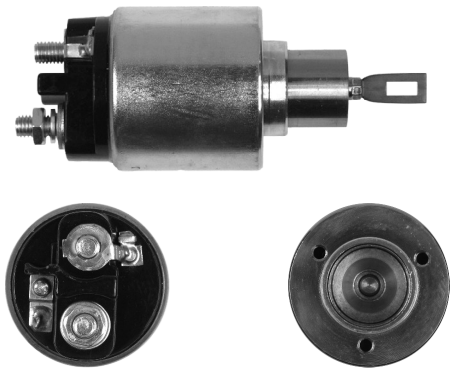

AS SS0019

ORIGINAL **CARGO** 12 V
0331303048 **132258**

B+ M8, **Coil bolt** M8

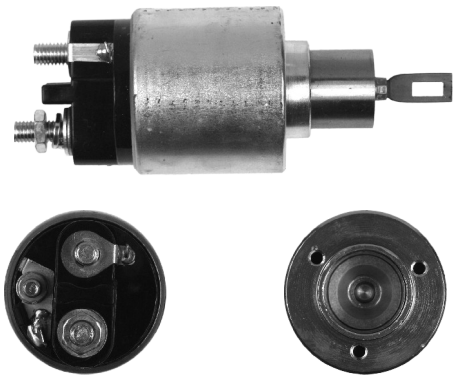

AS SS0020

ORIGINAL **CARGO** 12 V
0331303100 **133424**

B+ M8, **Coil bolt** M8

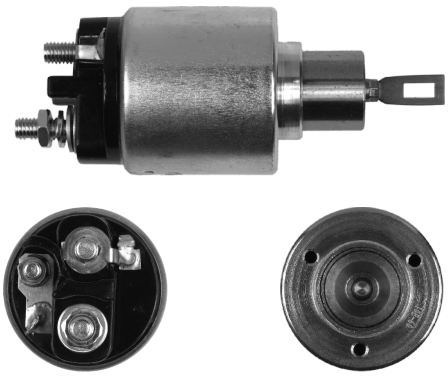

AS SS0021

ORIGINAL **CARGO** 12 V
0331304001 **138877**

B+ M8, **Coil bolt** M8

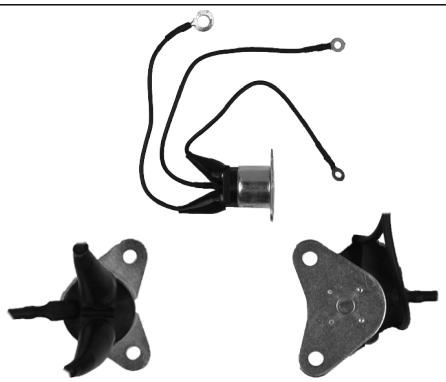

AS SS0022

ORIGINAL **CARGO** 24 V
1337210726 **230386**

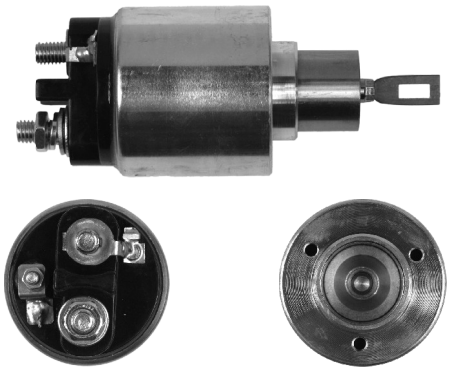

AS SS0023

ORIGINAL **CARGO** 12 V
0331303020 **137826**

B+ M8, **Coil bolt** M8

AS SS0024

ORIGINAL **CARGO** 12 V
0331302062 **131790**

B+ M8, **Coil bolt** M8

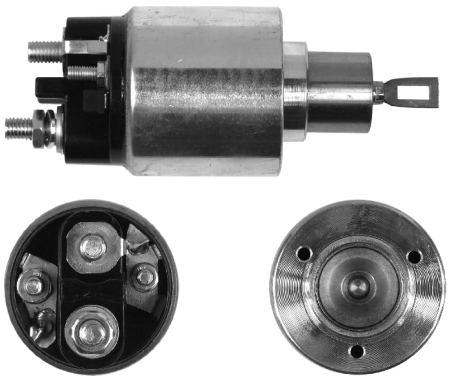

AS SS0025

ORIGINAL **CARGO** 12 V
0331303116 **136036**

B+ M8, **Coil bolt** M8

In offer also:
SS0025(OEM)

AS SS0026

ORIGINAL **CARGO** 12 V
2339303294 **230244**

B+ M8, **Coil bolt** M8

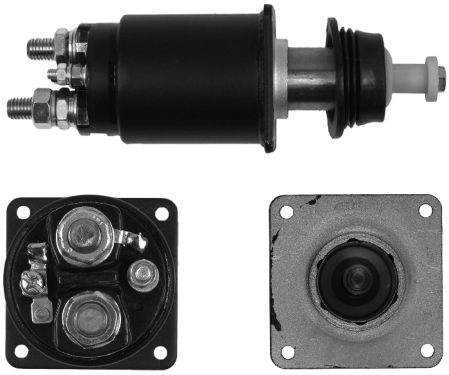

AS SS0027

ORIGINAL **CARGO** 24 V
0331403003 **139967**

B+ M12, **Coil bolt** M12

STARTER SOLENOIDS
BOSCH

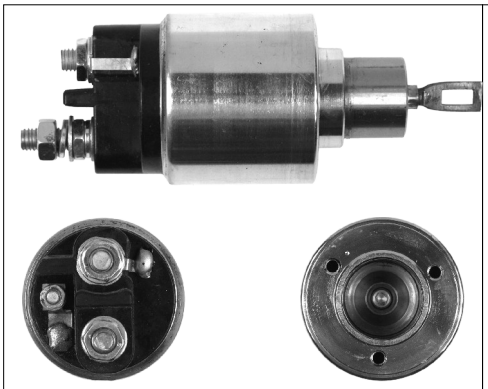

AS SS0028

ORIGINAL **CARGO** 12 V
9330331001 **137491**

B+ M8, **Coil bolt** M8

AS SS0029

ORIGINAL **CARGO** 24 V
2339402117 **230904**

B+ M10, **Coil bolt** M8

AS SS0030

ORIGINAL **CARGO** 24 V
2339403006 **138311**

B+ M12, **Coil bolt** M12

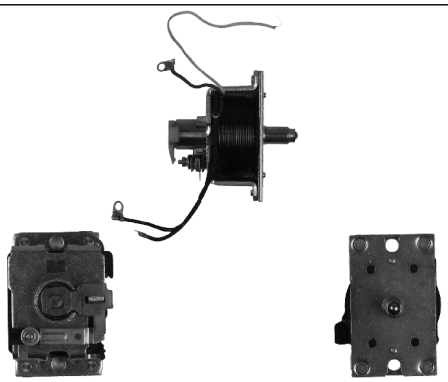

AS SS0031

ORIGINAL **CARGO** 24 V
0331450002 **130305**

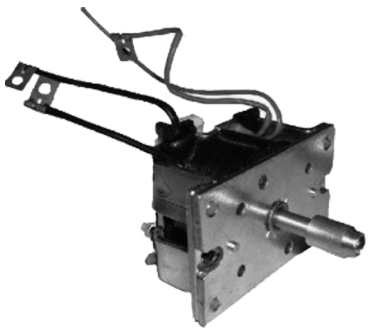

AS SS0032

ORIGINAL **CARGO** 12 V
0331450009 **133487**

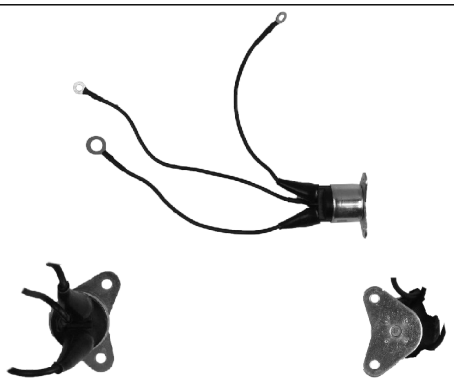

AS SS0033

ORIGINAL **CARGO** 24 V
6033AD0086 **231267**

AS SS0034

ORIGINAL **CARGO** 12 V
0331303046 **131793**

B+ M8, **Coil bolt** M8

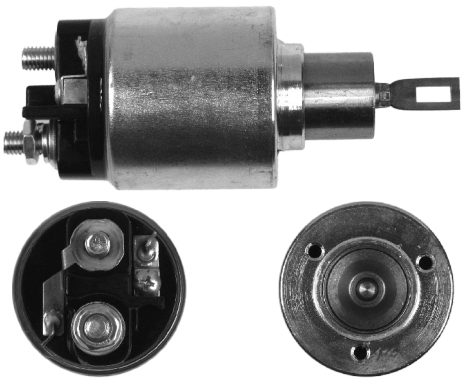

AS SS0035

ORIGINAL **CARGO** 12 V
2339303261 **136371**

B+ M8, **Coil bolt** M8

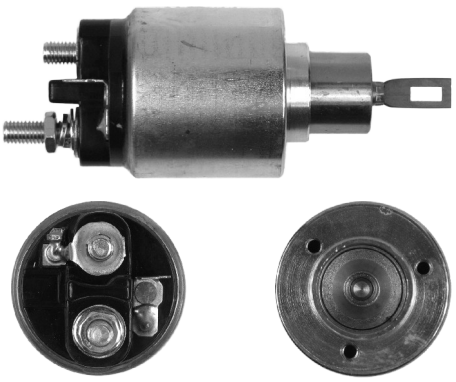

AS SS0036

ORIGINAL **CARGO** 12 V
2339303229 **136852**

B+ M8, **Coil bolt** M8

STARTER SOLENOIDS
BOSCH

AS SS0037

ORIGINAL **CARGO** 12 V
0331303146 **136615**

B+ M8, **Coil bolt** M8

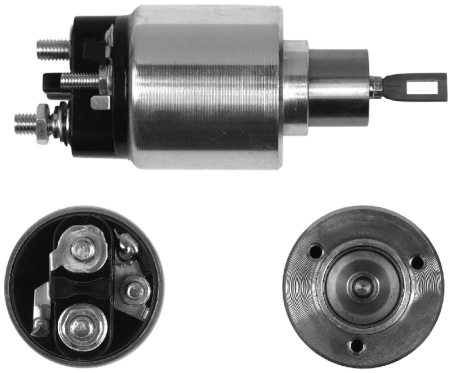

AS SS0038

ORIGINAL **CARGO** 12 V
2339303001 **137613**

B+ M8

AS SS0039

ORIGINAL **CARGO** 12 V
2339304002 **230356**

B+ M8, **Coil bolt** M8

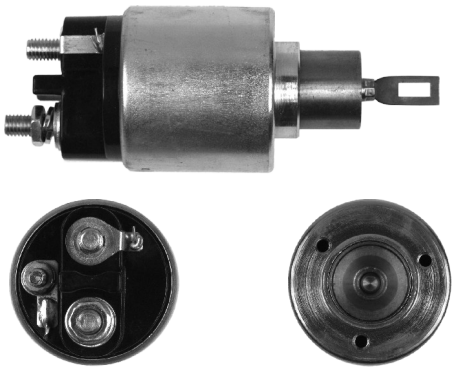

AS SS0040

ORIGINAL **CARGO** 12 V
2339303210 **230323**

B+ M8, **Coil bolt** M8

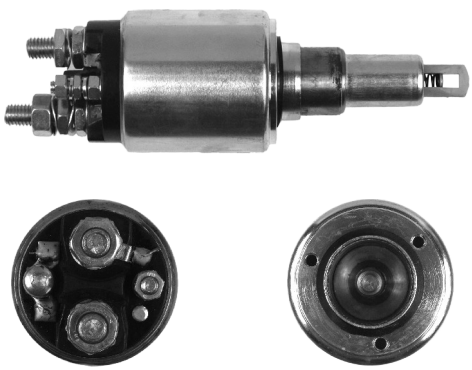

AS SS0041

ORIGINAL **CARGO** 24 V
2339402220 **237753**

AS SS0042

ORIGINAL **CARGO** 12 V
2339305033 **237672**

B+ M8

In offer also:
SS0042(BOSCH)

AS SS0043

ORIGINAL 12 V
2339305051

B+ M8, **Coil bolt** M8

AS SS0044

ORIGINAL 12 V
2339305043

B+ M8, **Coil bolt** M8

AS SS0045

ORIGINAL **CARGO** 12 V
2339303319 **232185**

B+ M8, **Coil bolt** M8

STARTER SOLENOIDS
BOSCH

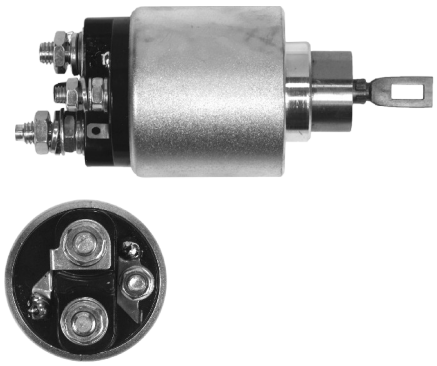

AS SS0046

ORIGINAL **CARGO** 12 V
0331303142 **137266**
2339303220

B+ M8, **Coil bolt** M8

AS SS0047

ORIGINAL **CARGO** 12 V
2339303254 **137982**

B+ M8, **Coil bolt** M8

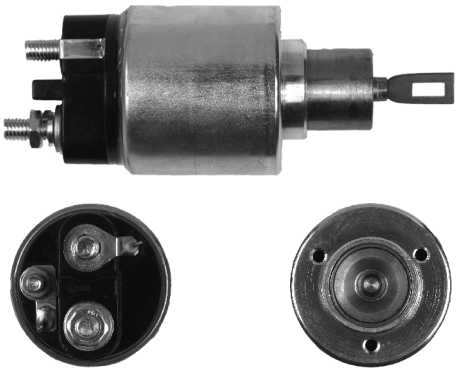

AS SS0048

ORIGINAL **CARGO** 12 V
0331303134 **137696**

B+ M8, **Coil bolt** M8

AS SS0049

ORIGINAL **CARGO** 12 V
2339304006 **139075**

B+ M8, **Coil bolt** M8

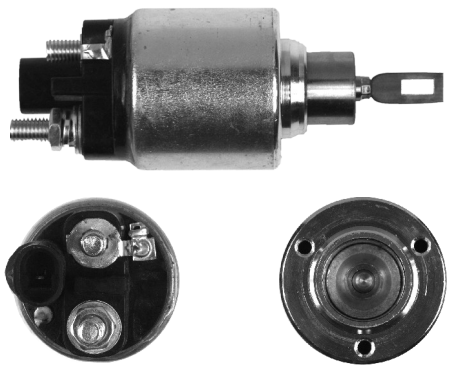

AS SS0050

ORIGINAL **CARGO** 12 V
9337043526 **233796**

B+ M8, **Coil bolt** M8

AS SS0051

ORIGINAL **CARGO** 12 V
2339303289 **233716**

B+ M8, **Coil bolt** M8

AS SS0052

ORIGINAL **CARGO** 12 V
2339305025 **330030**

B+ M8

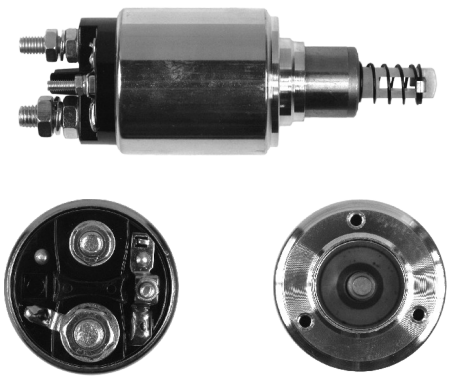

AS SS0053

ORIGINAL **CARGO** 12 V
0331402027 **131189**
0331402028

B+ M8, **Coil bolt** M8

AS SS0054

ORIGINAL **CARGO** 12 V
2339305014 **235535**
2339305034

B+ M8, **Coil bolt** M8

STARTER SOLENOIDS
BOSCH

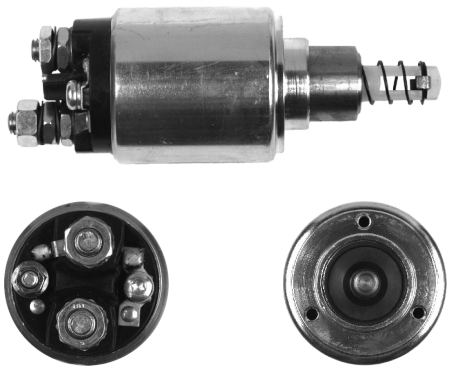

AS SS0055

ORIGINAL 12 V
2339402119
0011521510
B+ M10, **Coil bolt** M10

AS SS0056

ORIGINAL CARGO 12 V
0331302053 135878
B+ M8, **Coil bolt** M8

AS SS0057

ORIGINAL CARGO 12 V
0331302040 130468
0331302051
B+ M8, **Coil bolt** M8

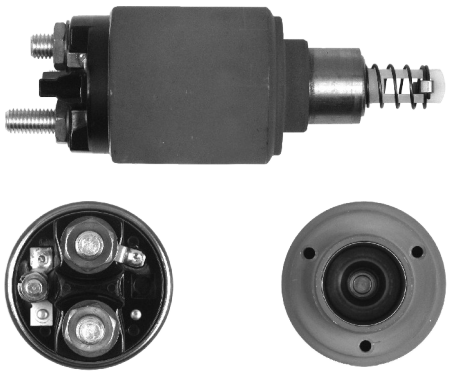

AS SS0058

ORIGINAL CARGO 24 V
2339402124 233583
2339402165
B+ M10, **Coil bolt** M10

AS SS0059

ORIGINAL CARGO 24 V
2339402136 233852
2339402157
B+ M10, **Coil bolt** M10

AS SS0060

ORIGINAL CARGO 24 V
6033AD5138 239094
6033AD5255

AS SS0061

ORIGINAL 24 V
6033AD5190

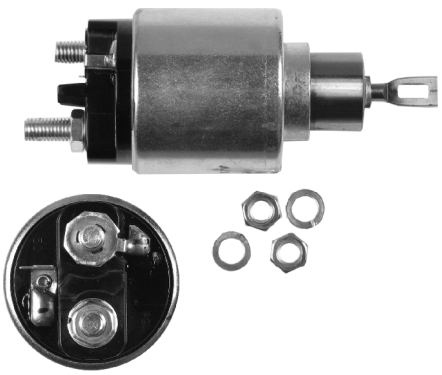

AS SS0062

ORIGINAL CARGO 12 V
0331303066 132265
9330081062
B+ M8, **Coil bolt** M8

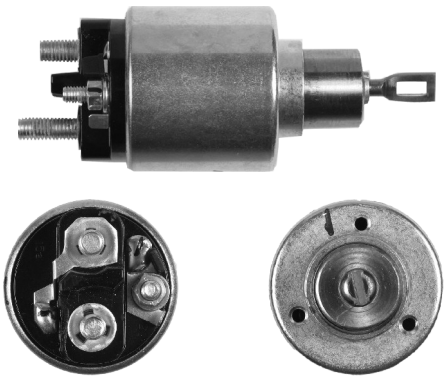

AS SS0063

ORIGINAL CARGO 12 V
0331303118 137175
0331303133
B+ M8, **Coil bolt** M8

STARTER SOLENOIDS
BOSCH

AS SS0064

ORIGINAL	CARGO	12 V
0331303008	131791	
0331303033	132262	

B+ M8, **Coil bolt** M8

AS SS0065

ORIGINAL	CARGO	12 V
0331303022	139212	
0331303522		

B+ M8, **Coil bolt** M8

AS SS0066

ORIGINAL	CARGO	12 V
0331303107	137693	
0331303607		

B+ M8, **Coil bolt** M8

AS SS0067

ORIGINAL	CARGO	12 V
0331303094	132828	
2339303232		

B+ M8, **Coil bolt** M8

AS SS0068

ORIGINAL	12 V
2339305111	

STARTER SOLENOIDS
DELCO

AS SS1001

ORIGINAL **CARGO** 12 V
1114458 **130499**

B+ M10

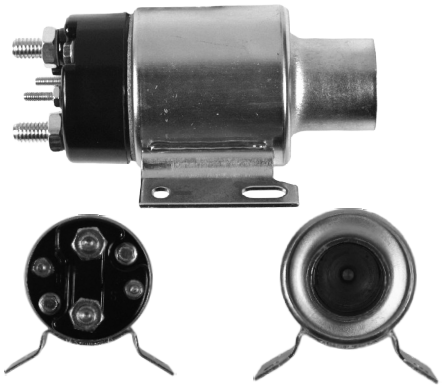

AS SS1002

ORIGINAL **CARGO** 12 V
1115540 **130500**

B+ M10, **Coil bolt** M8

AS SS1003

ORIGINAL **CARGO** 24 V
1115595 **131349**

B+ ½" M13, **Coil bolt** ½" M13

AS SS1004

ORIGINAL **CARGO** 24 V
1115559 **131364**

B+ M14-1.5, **Coil bolt** M14-1.5

AS SS1005

ORIGINAL **CARGO** 12 V
1115593 **131369**

B+ ½"- M13, **Coil bolt** ½"- M13

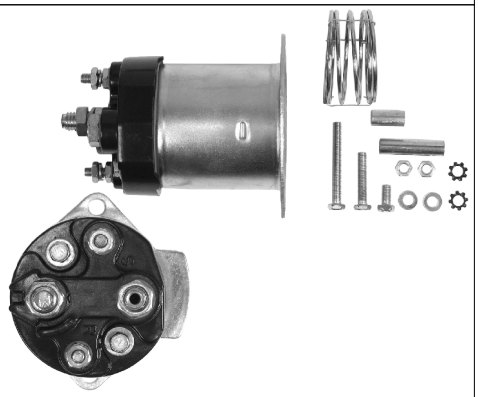

AS SS1006

ORIGINAL **CARGO** 12 V
1114514 **131590**

B+ M10, **Coil bolt** 3/8" UNC

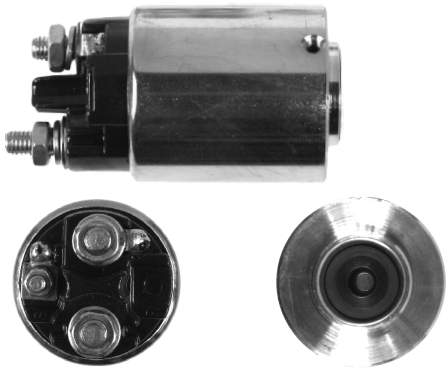

AS SS1007

ORIGINAL **CARGO** 12 V
10469039 **132944**

B+ M8, **Coil bolt** M8

AS SS1008

ORIGINAL **CARGO** 12 V
1114580 **137339**

B+ M10, **Coil bolt** M8

AS SS1009

ORIGINAL **CARGO** 12 V
1114583 **137370**

B+ M8, **Coil bolt** M8

STARTER SOLENOIDS
DELCO

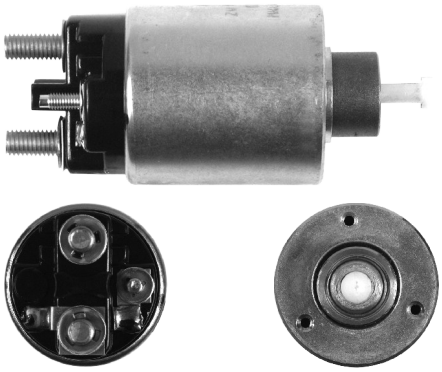

AS SS1010

ORIGINAL **CARGO** 12 V
10475646 **138217**

B+ M8, **Coil bolt** M8

AS SS1011

ORIGINAL **CARGO** 12 V
3471697 **131272**

B+ M8, **Coil bolt** M8

AS SS1012

ORIGINAL **CARGO** 12 V
3471725 **131273**

B+ M8, **Coil bolt** M8

AS SS1013

ORIGINAL **CARGO** 12 V
1115609 **139209**

B+ 1/2"UNC, **Coil bolt** 1/2"UNC

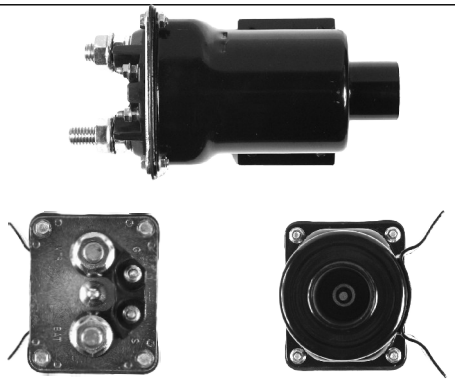

AS SS1014

ORIGINAL **CARGO** 12 V
1115556 **131363**

B+ M14-1.5, **Coil bolt** M14-1.5

AS SS1015

ORIGINAL **CARGO** 24 V
1115604 **131361**

B+ ½"- M13, **Coil bolt** ½"- M13

AS SS1016

ORIGINAL **CARGO** 12 V
DR901 **130963**

B+ M8, **Coil bolt** M8

AS SS1017

ORIGINAL **CARGO** 12 V
DR902 **131119**

B+ M8

AS SS1018

ORIGINAL **CARGO** 12 V
10484662 **234163**

STARTER SOLENOIDS
DELCO

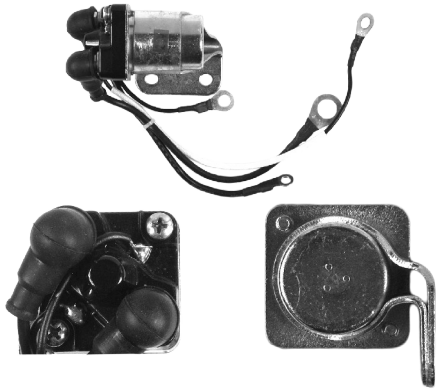

AS SS1019

ORIGINAL **CARGO** 24 V
10457367 **230186**

AS SS1020

ORIGINAL **CARGO** 24 V
1115622 **231919**

B+ M14-1.5, **Coil bolt** M14-1.5

AS SS1021

CARGO 12 V
233762

B+ M8, **Coil bolt** M8

AS SS1022

ORIGINAL **CARGO** 24 V
10457368 **231800**

B+ M10, **Coil bolt** M8

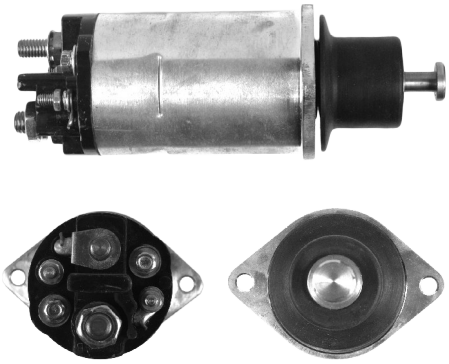

AS SS1023

ORIGINAL **CARGO** 12 V
D937A **231927**

B+ M8, **Coil bolt** M8

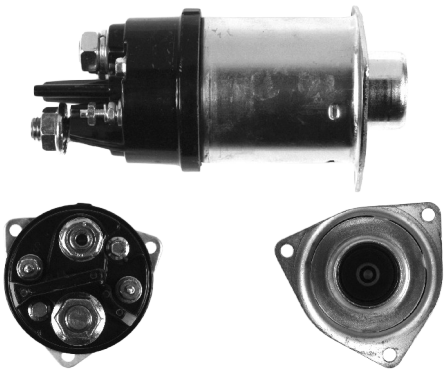

AS SS1024

ORIGINAL **CARGO** 24 V
1115634 **231926**

Coil bolt ½" UNC

STARTER SOLENOIDS
HITACHI

AS SS2001

ORIGINAL CARGO 12 V
2120-M8700Y 130811

B+ M8, **Coil bolt** M8

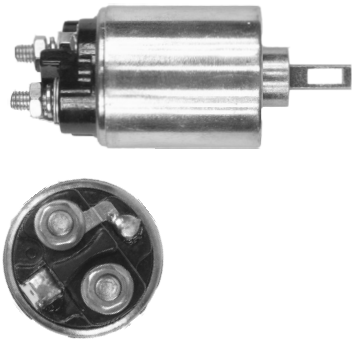

AS SS2002

ORIGINAL CARGO 12 V
2114-77004 131144

B+ M8, **Coil bolt** M8

AS SS2003

ORIGINAL CARGO 12 V
2114-17005 132093

B+ M8, **Coil bolt** M8

AS SS2004

ORIGINAL CARGO 12 V
2120-67002 131431

B+ M8

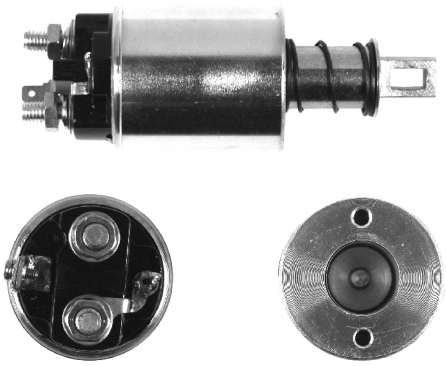

AS SS2005

ORIGINAL CARGO 12 V
2130-6700 132059

B+ M8, **Coil bolt** M8

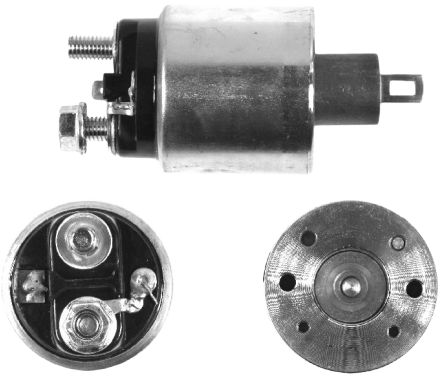

AS SS2006

ORIGINAL CARGO 12 V
2114-27501 132094

B+ M8, **Coil bolt** M8

AS SS2007

ORIGINAL CARGO 12 V
2114-37613 138170

B+ M8, **Coil bolt** M8

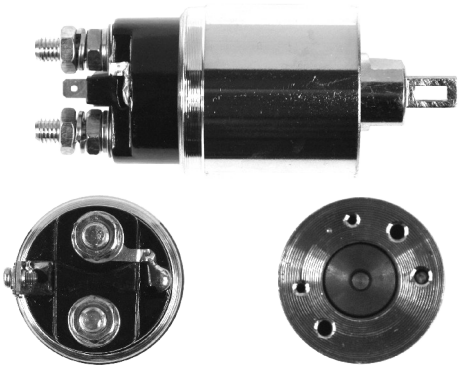

AS SS2008

ORIGINAL CARGO 12 V
2130-67005 133750

B+ M8, **Coil bolt** M8

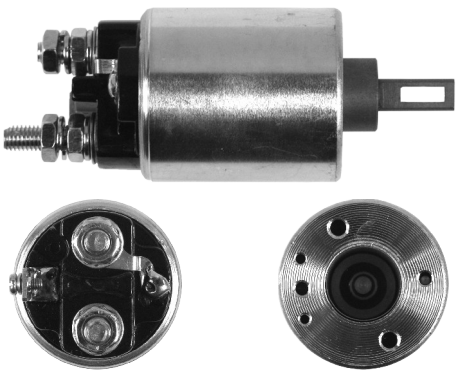

AS SS2009

ORIGINAL CARGO 12 V
2114-27001 132058

B+ M8, **Coil bolt** M8

STARTER SOLENOIDS
HITACHI

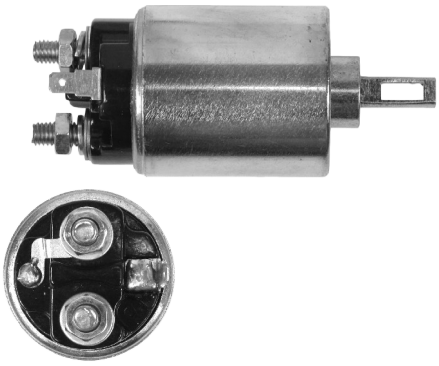

AS SS2010

ORIGINAL **CARGO** 12 V
2114-37005 **133054**

B+ M8, **Coil bolt** M8

AS SS2011

ORIGINAL **CARGO** 12 V
2114-27613 **138957**

B+ M8, **Coil bolt** M8

AS SS2012

CARGO 12 V
232452

B+ M8, **Coil bolt** M8

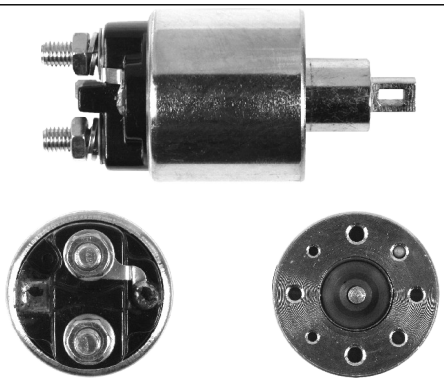

AS SS2013

ORIGINAL **CARGO** 12 V
2114-27005 **133044**

B+ M8, **Coil bolt** M8

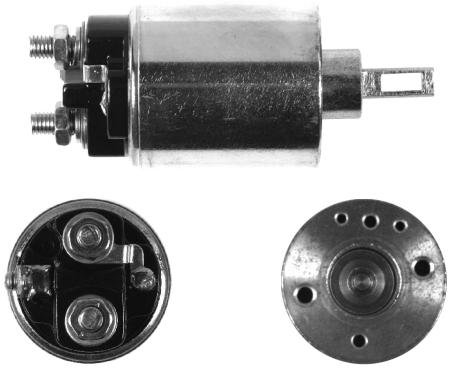

AS SS2014

ORIGINAL **CARGO** 12 V
2114-97509 **133047**

B+ M8, **Coil bolt** M8

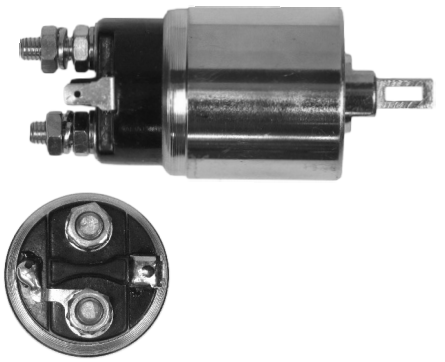

AS SS2015

ORIGINAL **CARGO** 12 V
2130-57003 **135370**

B+ M8, **Coil bolt** M8

AS SS2016

ORIGINAL **CARGO** 12 V
2114-77601 **137795**

B+ M8, **Coil bolt** M8

AS SS2017

ORIGINAL **CARGO** 12 V
2114-67605 **232200**

B+ M8, **Coil bolt** M8

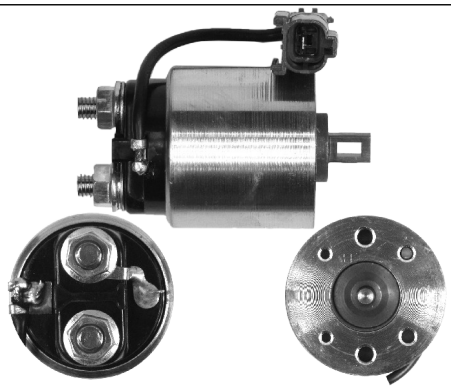

AS SS2018

ORIGINAL **CARGO** 12 V
2114-77506 **139784**
2114-77507

B+ M8, **Coil bolt** M8

STARTER SOLENOIDS
HITACHI

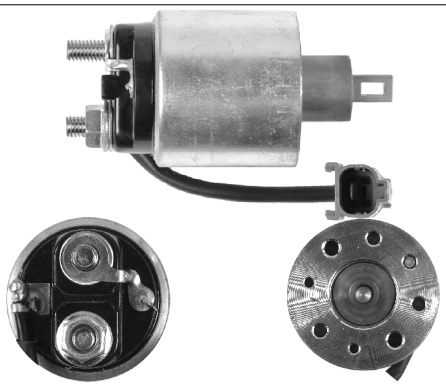

AS SS2019

ORIGINAL **CARGO** 12 V
2114-57606 **138814**

B+ M8, **Coil bolt** M8

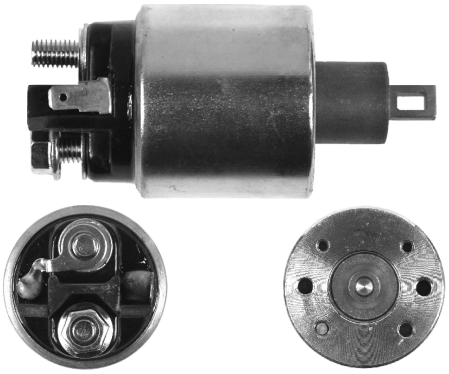

AS SS2020

ORIGINAL **CARGO** 12 V
2114-27602 **232487**

B+ M8, **Coil bolt** M8

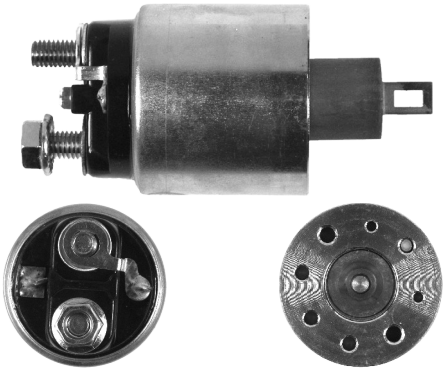

AS SS2021

ORIGINAL **CARGO** 12 V
2114-57610 **231996**

B+ M8, **Coil bolt** M8

AS SS2022

ORIGINAL **CARGO** 12 V
2114-67610 **135287**

B+ M8, **Coil bolt** M8

STARTER SOLENOIDS
VALEO

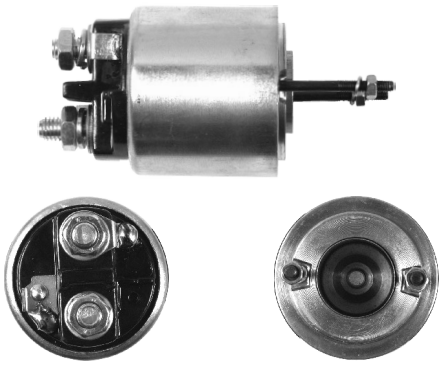

AS SS3001

ORIGINAL	CARGO	
102217	131171	12 V

B+ M8, **Coil bolt** M8

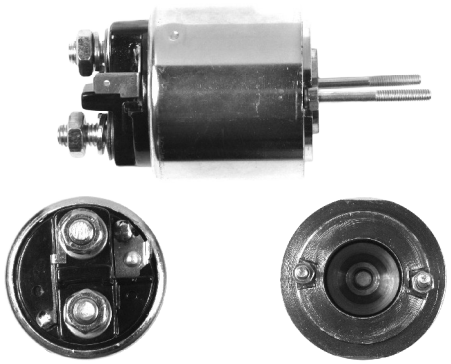

AS SS3002

ORIGINAL	CARGO	
102849	131584	12 V

B+ M8, **Coil bolt** M8

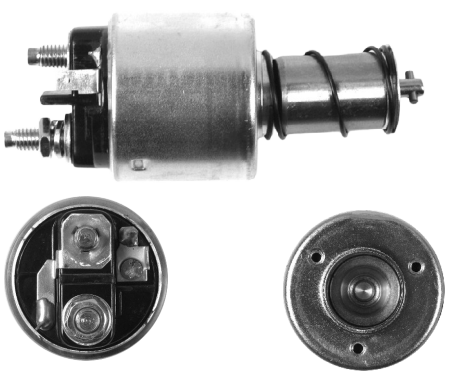

AS SS3003

ORIGINAL	CARGO	
594045	132976	12 V

B+ M8, **Coil bolt** M8

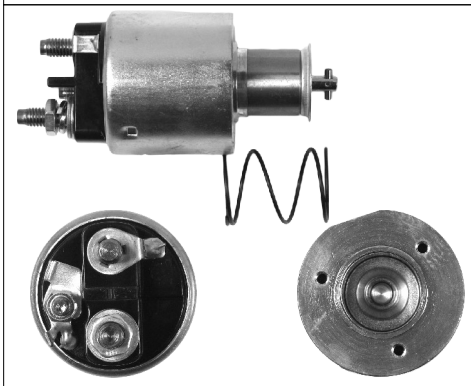

AS SS3004

ORIGINAL	CARGO	
594047	132977	12 V

B+ M8, **Coil bolt** M8

In offer also:
SS3004B
with another terminal

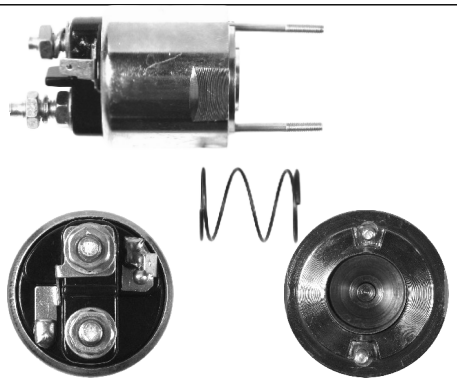

AS SS3005

ORIGINAL	CARGO	
181404	132024	12 V

B+ M8, **Coil bolt** M8

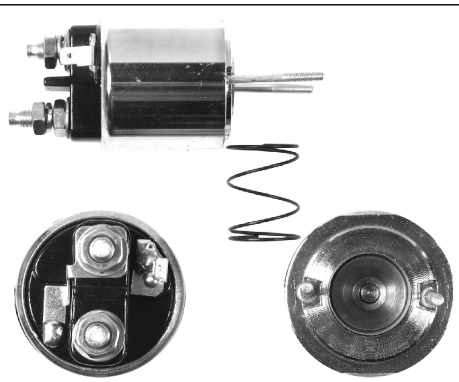

AS SS3006

ORIGINAL	CARGO	
181069	132025	12 V

B+ M8, **Coil bolt** M8

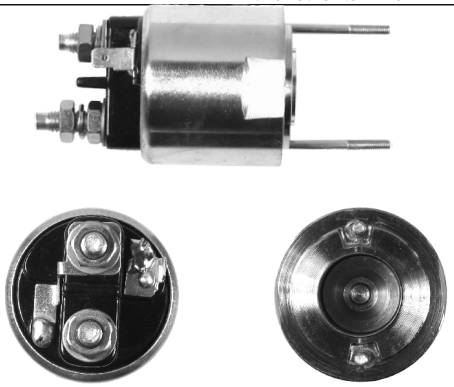

AS SS3007

ORIGINAL	CARGO	
104594	133532	12 V

B+ M8, **Coil bolt** M8

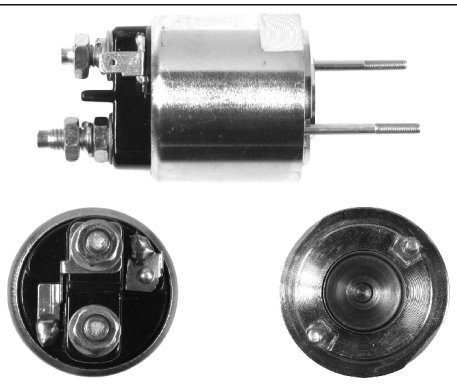

AS SS3008

ORIGINAL	CARGO	
106142	133533	12 V

B+ M8, **Coil bolt** M8

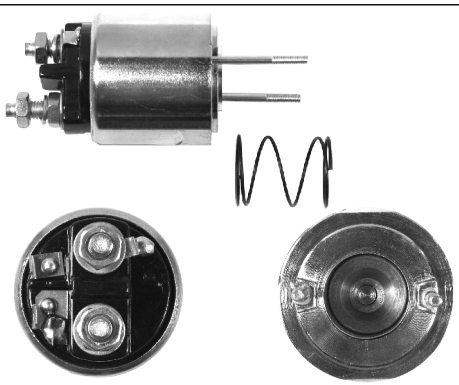

AS SS3009

ORIGINAL	CARGO	
105254	133534	12 V

B+ M8, **Coil bolt** M8

STARTER SOLENOIDS
VALEO

AS SS3010

ORIGINAL **CARGO** 24 V
594075 **135820**

B+ M10, **Coil bolt** M10

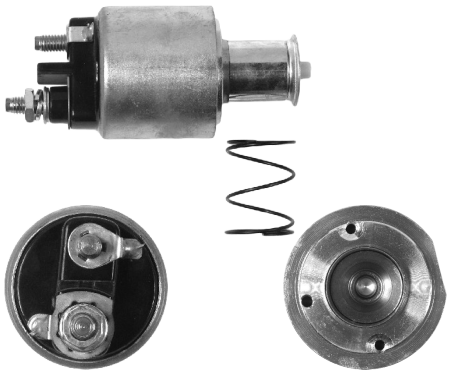

AS SS3011

CARGO 12 V
236801

AS SS3012

ORIGINAL **CARGO** 12 V
594048 **232012**

B+ M8, **Coil bolt** M8

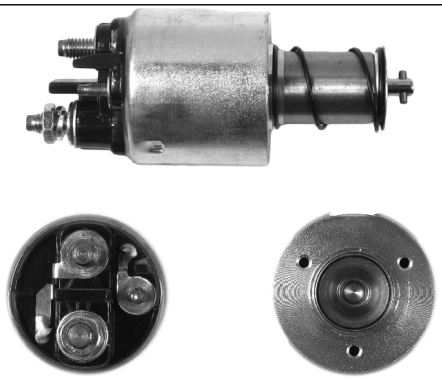

AS SS3013

ORIGINAL **CARGO** 12 V
594118 **135390**

B+ M8, **Coil bolt** M8

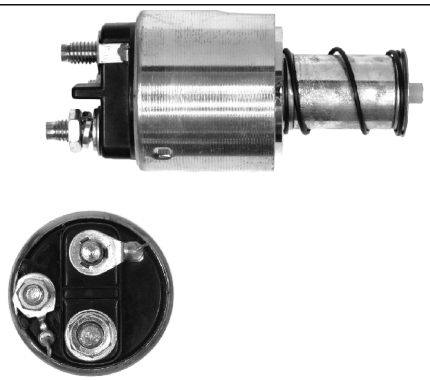

AS SS3014

FOR D6G33

AS SS3015

CARGO 12 V
236626

B+ M8, **Coil bolt** M8

AS SS3016

ORIGINAL **CARGO** 12 V
594288 **234778**

B+ M8, **Coil bolt** M8

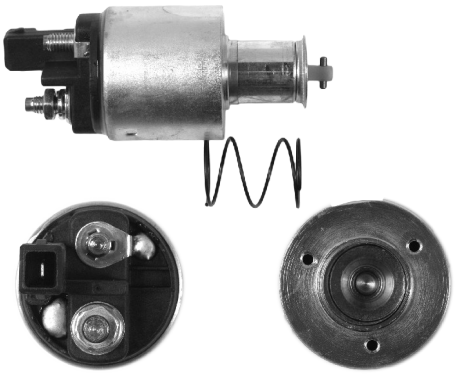

AS SS3017

ORIGINAL **CARGO** 12 V
594391 **234388**

B+ M8, **Coil bolt** M8

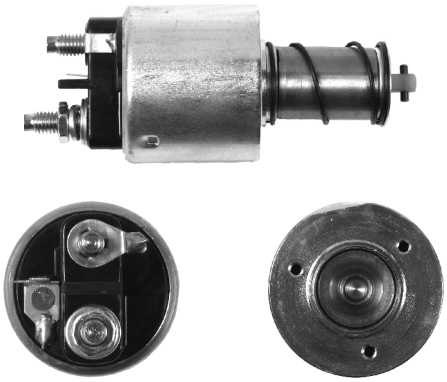

AS SS3018

ORIGINAL **CARGO** 12 V
594392 **234389**

B+ M8, **Coil bolt** M8

STARTER SOLENOIDS
VALEO

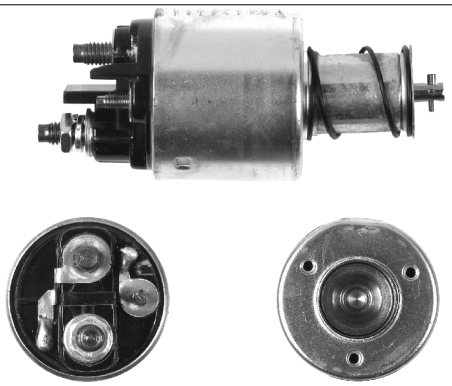

AS SS3019

ORIGINAL **CARGO** 12 V
594181 **231610**

B+ M8, **Coil bolt** M8

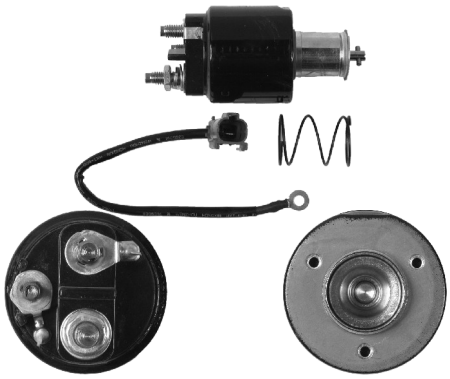

AS SS3020

for D6RA98 12 V

B+ M8, **Coil bolt** M8

AS SS3021

ORIGINAL **CARGO** 12 V
594348 **235106**

B+ M8, **Coil bolt** M8

STARTER SOLENOIDS
MAGNETI MARELLI/LUCAS

AS SS4001

ORIGINAL	CARGO	
63602109	138477	12 V

B+ M8, **Coil bolt** 3

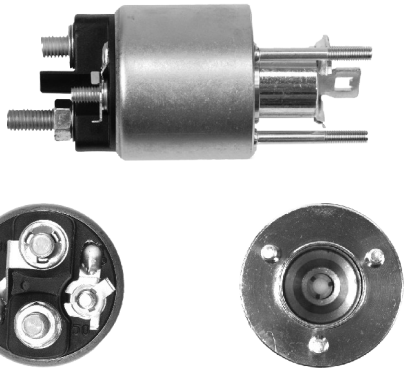

AS SS4002

ORIGINAL	CARGO	
85541400	230809, 138532	12 V

B+ M8, **Coil bolt** M8

AS SS4003

ORIGINAL	CARGO	
9957705	131112	12 V

B+ M10, **Coil bolt** M10

AS SS4004

ORIGINAL	CARGO	
9986109	131115	24 V

B+ M10, **Coil bolt** M10

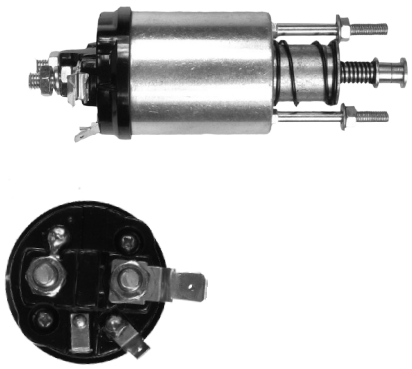

AS SS4005

ORIGINAL	CARGO	
76755	130855	12 V

B+ M8, **Coil bolt** M8

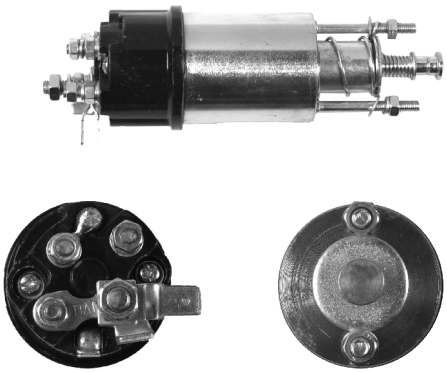

AS SS4006

ORIGINAL	CARGO	
76740	131248	12 V

B+ M8, **Coil bolt** M6

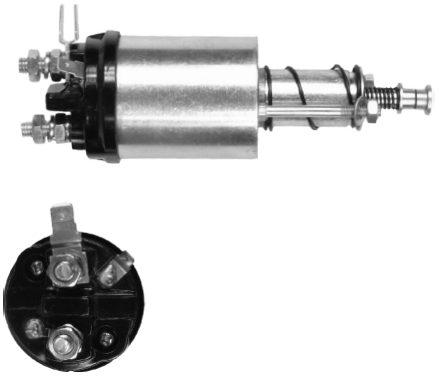

AS SS4007

ORIGINAL	CARGO	
76804	132269	12 V

B+ M8, **Coil bolt** M8

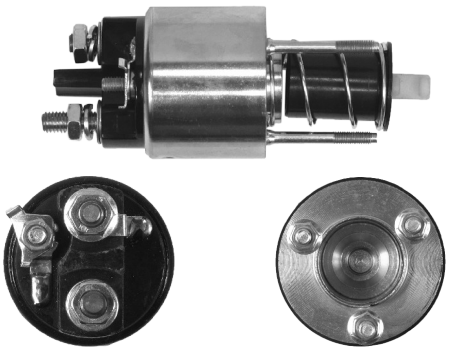

AS SS4008

ORIGINAL	CARGO	
85541740	230808	12 V

B+ M8, **Coil bolt** M8

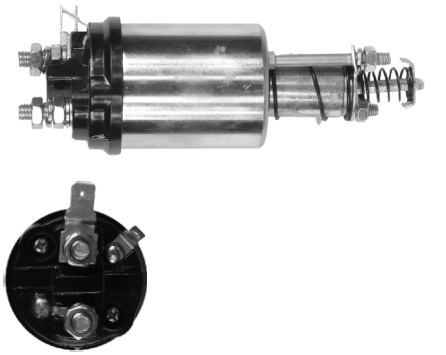

AS SS4009

ORIGINAL	CARGO	
TPB110	134890	12 V

B+ M10, **Coil bolt** M8

STARTER SOLENOIDS
MAGNETI MARELLI/LUCAS

AS SS4010

ORIGINAL	CARGO	
85541410	137190	12 V

B+ M8, **Coil bolt** M8

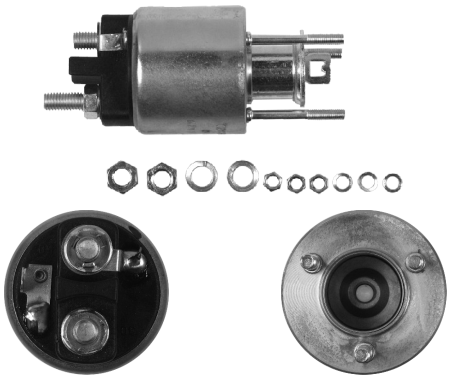

AS SS4011

ORIGINAL	CARGO	
85540961	137191	12 V

B+ M8, **Coil bolt** M8

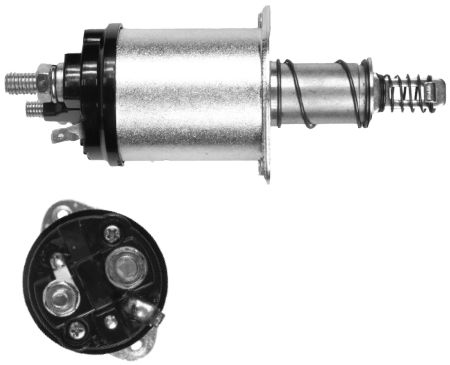

AS SS4012

ORIGINAL	CARGO	
77122	134888	12 V

B+ M10, **Coil bolt** M8

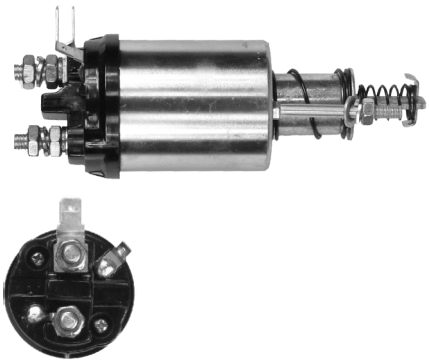

AS SS4013

ORIGINAL	CARGO	
77136	134886	12 V

B+ M8, **Coil bolt** M8

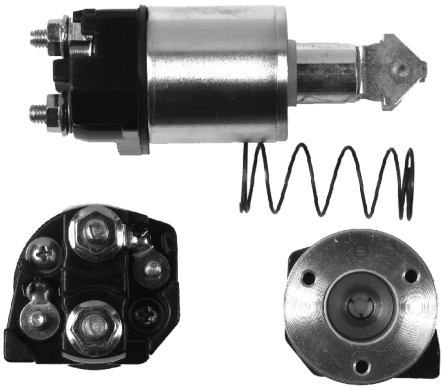

AS SS4015

ORIGINAL	CARGO	
85540711	136164	12 V

B+ M8, **Coil bolt** M8

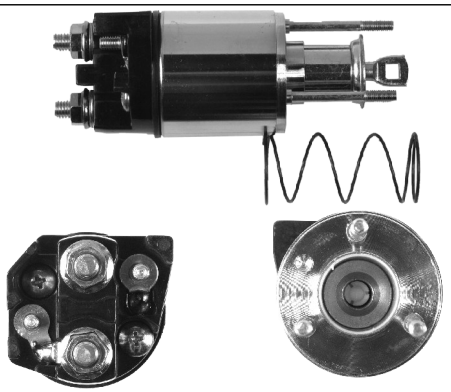

AS SS4016

ORIGINAL	CARGO	
63601963	137790	12 V

B+ M8, **Coil bolt** M8

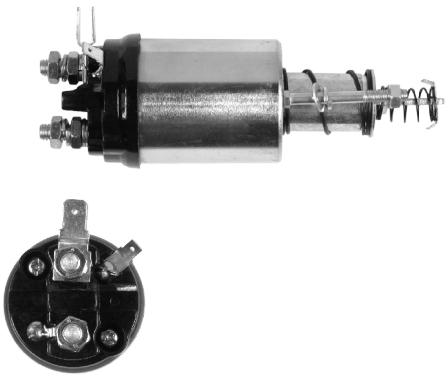

AS SS4017

ORIGINAL	CARGO	
85541320	133531	12 V

B+ M8, **Coil bolt** M8

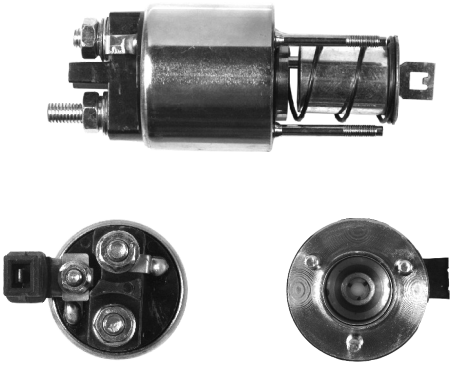

AS SS4018

ORIGINAL	CARGO	
85541070	138531	12 V

B+ M8, **Coil bolt** M8

AS SS4019

ORIGINAL	CARGO	
85541310	231990	12 V

B+ M8, **Coil bolt** M8

STARTER SOLENOIDS
MAGNETI MARELLI/LUCAS

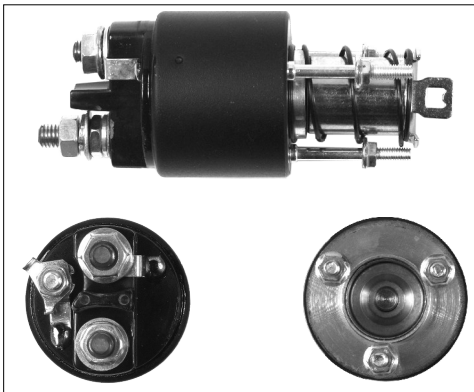

AS SS4020

ORIGINAL **CARGO** 12 V
85511103 **138444**

B+ M8, **Coil bolt** M8

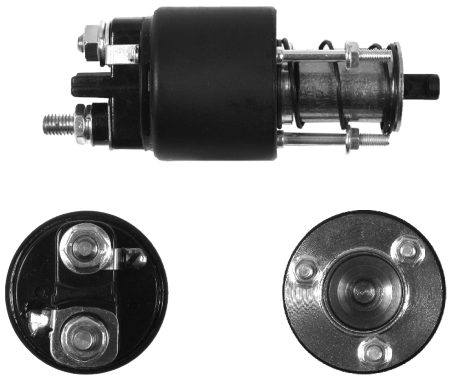

AS SS4021

ORIGINAL **CARGO** 12 V
85541990 **238841**

B+ M8, **Coil bolt** M8

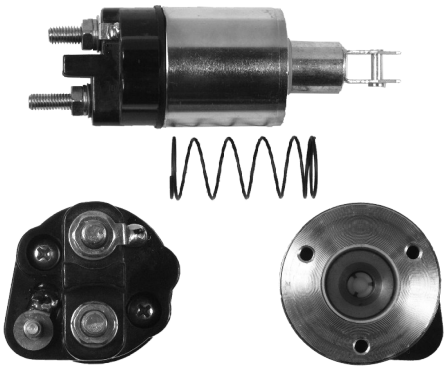

AS SS4022

ORIGINAL **CARGO** 12 V
85540922 **139104**

B+ M8, **Coil bolt** M8

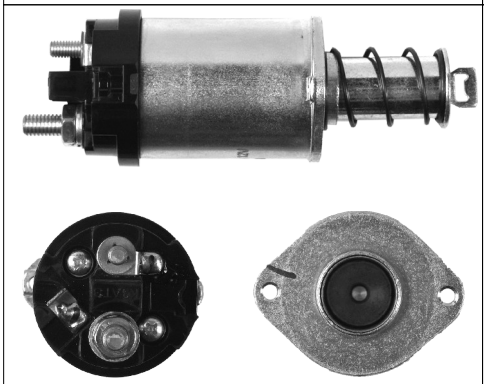

AS SS4023

ORIGINAL **CARGO** 12 V
TPB140 **134457**
TPB146

B+ M8, **Coil bolt** M6

STARTER SOLENOIDS
MITSUBISHI

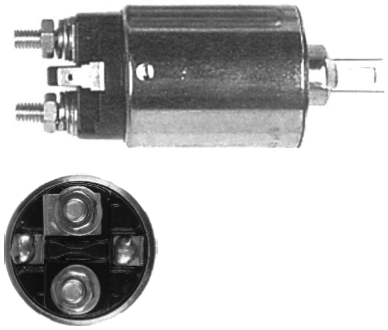

AS SS5001

ORIGINAL CARGO 12 V
M371X00171 231976

B+ M8, **Coil bolt** M8

AS SS5002

ORIGINAL CARGO 12 V
M371X62171 133288

B+ M8, **Coil bolt** M8

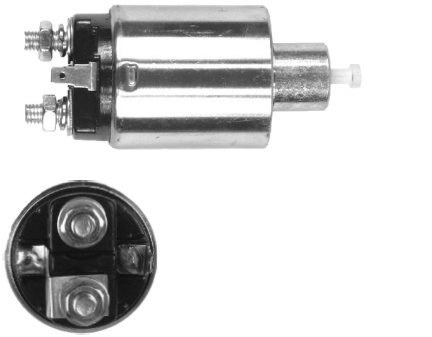

AS SS5003

ORIGINAL CARGO 12 V
M371X64271 133049

B+ M8, **Coil bolt** M8

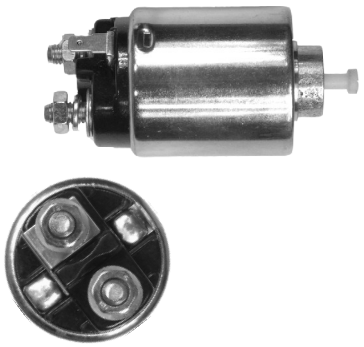

AS SS5004

ORIGINAL CARGO 12 V
M371X60371 133288

B+ M8, **Coil bolt** M8

AS SS5005

ORIGINAL CARGO 12 V
M371X60271 133289

B+ M8, **Coil bolt** M8

AS SS5006

ORIGINAL CARGO 24 V
M371X42071 133521

B+ M8, **Coil bolt** M8

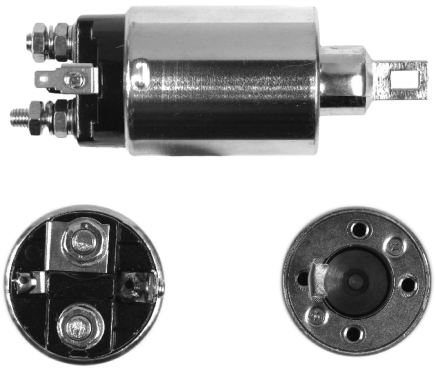

AS SS5007

ORIGINAL CARGO 24 V
M372X10171 132591

B+ M8, **Coil bolt** M8

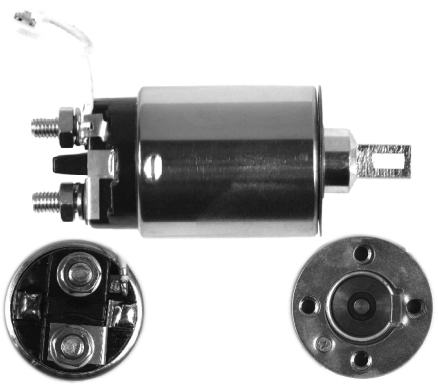

AS SS5008

ORIGINAL CARGO 12 V
M371X33371 132095

B+ M8, **Coil bolt** M8

AS SS5009

ORIGINAL CARGO 12 V
M372X04171 132473

B+ M8, **Coil bolt** M8

STARTER SOLENOIDS
MITSUBISHI

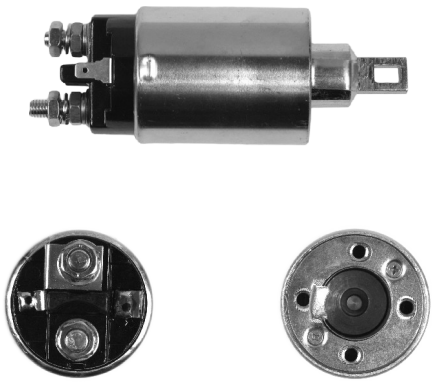

AS SS5010

ORIGINAL CARGO 12 V
M372X00171 132472

B+ M8, **Coil bolt** M8

AS SS5011

ORIGINAL CARGO 12 V
M371X62571 137813

B+ M8, **Coil bolt** M8

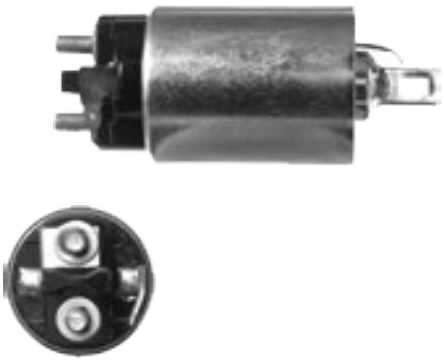

AS SS5012

ORIGINAL CARGO 12 V
M371X46071 132471

B+ M8, **Coil bolt** M8

AS SS5013

ORIGINAL CARGO 24 V
M371X20571 138418

B+ M8, **Coil bolt** M8

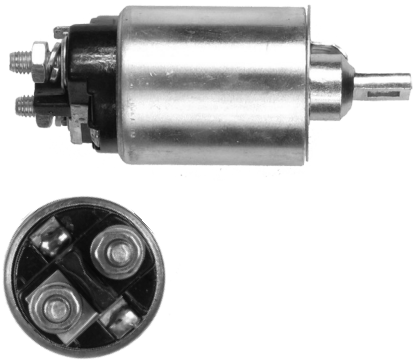

AS SS5014

ORIGINAL CARGO 12 V
M371X80671 139408

B+ M8, **Coil bolt** M8

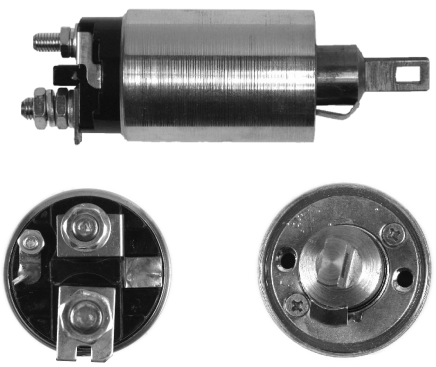

AS SS5015

ORIGINAL CARGO 12 V
M372X06971 139614

B+ M10, **Coil bolt** M8

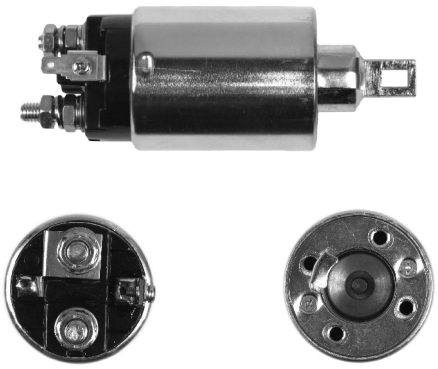

AS SS5016

ORIGINAL CARGO 12 V
M372X00471 231981

B+ M8, **Coil bolt** M8

AS SS5017

ORIGINAL CARGO 12 V
M371X74071 139202

B+ M8, **Coil bolt** M8

AS SS5018

CARGO 12 V
233709

B+ M8, **Coil bolt** M8

STARTER SOLENOIDS
MITSUBISHI

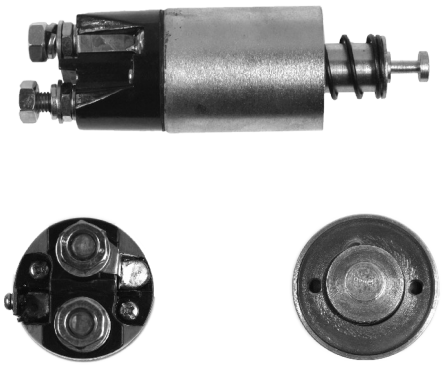

AS SS5019

ORIGINAL **CARGO** 24 V
M371XB4171 **237102**

AS SS5020

ORIGINAL **CARGO** 12 V
M371X72271 **138618**
M371X93575
B+ M8, **Coil bolt** M8

AS SS5021

CARGO 24 V
237090

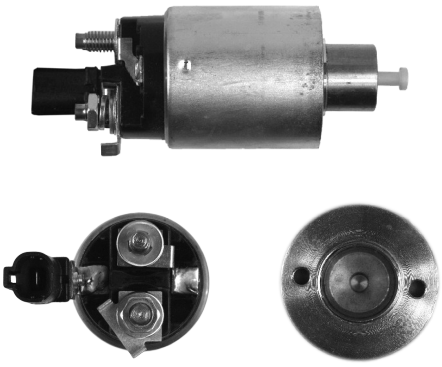

AS SS5022

ORIGINAL 12 V
M371X95275
23343-0W010
B+ M8, **Coil bolt** M8

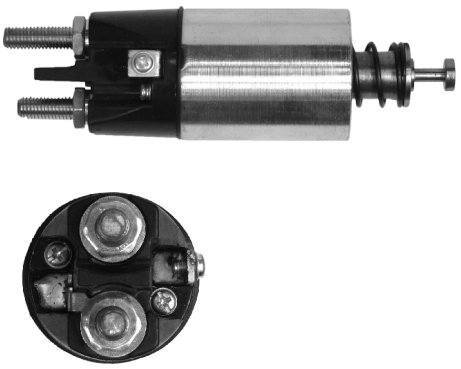

AS SS5023

ORIGINAL **CARGO** 12 V
M372XB0571 **235385**
B+ M10, **Coil bolt** M10, **for** 34MT Type 500

AS SS5024

ORIGINAL **CARGO** 12 V
M371X78773 **231982**
B+ M8, **Coil bolt** M8

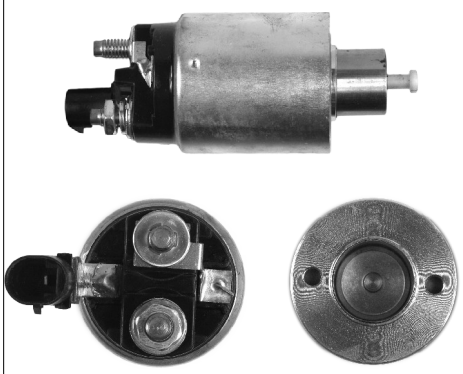

AS SS5025

CARGO 12 V
237498
B+ M8, **Coil bolt** M8

AS SS5026

ORIGINAL **CARGO** 12 V
M375X00371 **231454**
B+ M8, **Coil bolt** M8

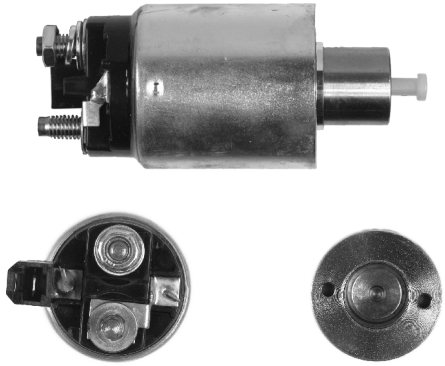

AS SS5027

ORIGINAL **CARGO** 12 V
M372X79873 **231820**
B+ M8, **Coil bolt** M8

STARTER SOLENOIDS
MITSUBISHI

AS SS5028

ORIGINAL CARGO 12 V
M371X64371 137930

B+ M8, **Coil bolt** M8

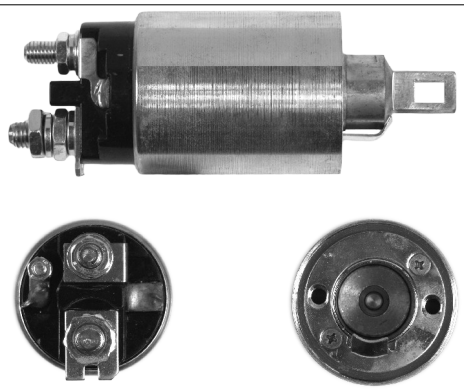

AS SS5029

ORIGINAL CARGO 12 V
M372X06171 231457

B+ M8, **Coil bolt** M8

AS SS5030

ORIGINAL CARGO 12 V
M371X63171 135590

B+ M8, **Coil bolt** M8

AS SS5031

ORIGINAL CARGO 12 V
M371X69171 138011

B+ M8, **Coil bolt** M8

AS SS5032

ORIGINAL CARGO 12 V
M371XC3775 236780

B+ M8, **Coil bolt** M8

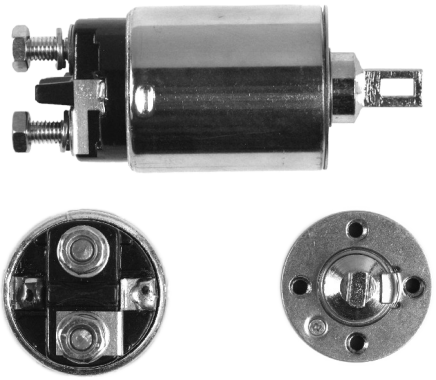

AS SS5033

ORIGINAL CARGO 12 V
M371X02471 133052
M371X16171
B+ M8, **Coil bolt** M8

AS SS5034

CARGO 12 V
239823

B+ M8

AS SS5035

CARGO 12 V
235100

B+ M8, **Coil bolt** M8

STARTER SOLENOIDS
NIPPONDENSO

AS SS6001

ORIGINAL **CARGO** 12 V
053400-1040 **130814**

B+ M8, **Coil bolt** M8

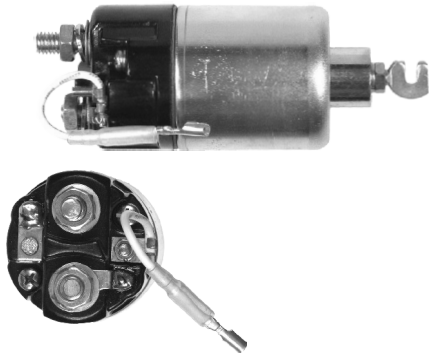

AS SS6002

ORIGINAL **CARGO** 12 V
053400-0150 **131084**

B+ M8, **Coil bolt** M8

AS SS6003

ORIGINAL **CARGO** 12 V
053400-3931 **131807**

B+ M8, **Coil bolt** M8

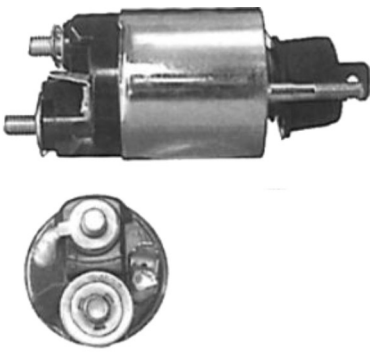

AS SS6004

ORIGINAL **CARGO** 12 V
053400-5280 **133675**

B+ M8, **Coil bolt** M8

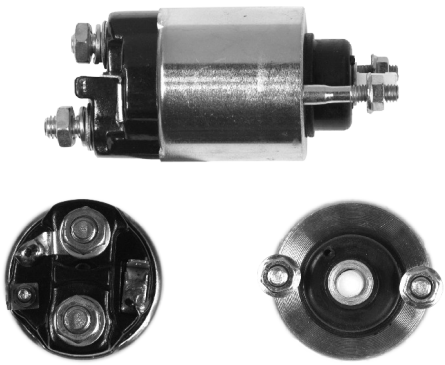

AS SS6005

ORIGINAL **CARGO** 12 V
053400-8510 **135652**

B+ M8, **Coil bolt** M8

AS SS6006

ORIGINAL **CARGO** 12 V
81AB 11390BA **137720**

B+ M8, **Coil bolt** M8

AS SS6007

ORIGINAL **CARGO** 12 V
053400-8750 **138014**

B+ M8, **Coil bolt** M8

AS SS6009

ORIGINAL **CARGO** 12 V
053400-8780 **133809**

B+ M8, **Coil bolt** M8

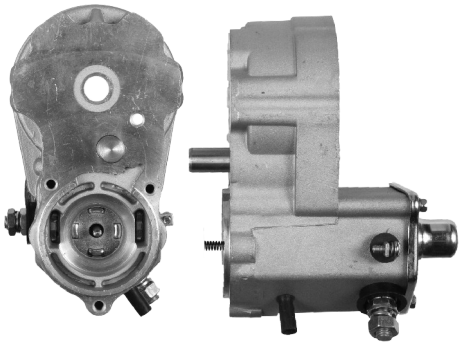

AS SS6010

CARGO 24 V
233453

B+ M10

STARTER SOLENOIDS
NIPPONDENSO

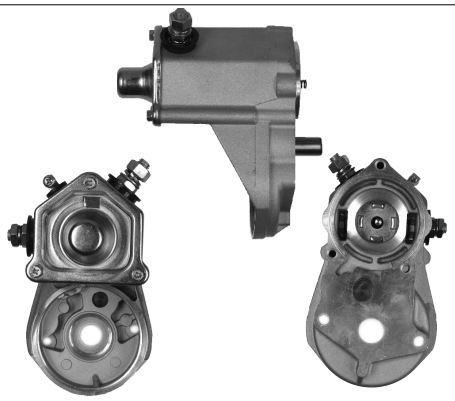

AS SS6011

CARGO 24 V
233454

B+ M10, **Coil bolt** M10

STARTER SOLENOIDS
OTHER

AS SS9001

ORIGINAL **CARGO** 12 V
E90Z-11390-A **136632**

B+ M8, **Coil bolt** M8

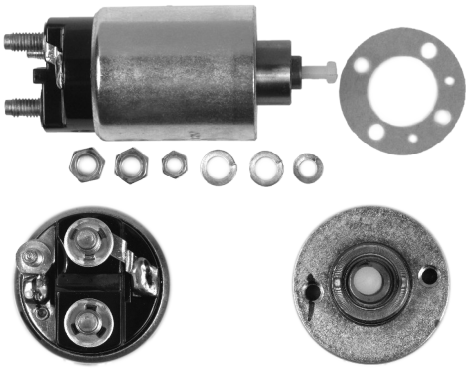

AS SS9002

ORIGINAL **CARGO** 12 V
F3RZ-11390-A **138496**

B+ M8, **Coil bolt** M8

AS SS9003

ORIGINAL **CARGO** 12 V
0333006004 **131370**

Amp. 80, **B+** M8, **Intermittent load** 500 Amp., **Seconds** 5, **Coil bolt** M8

AS SS9004

ORIGINAL **CARGO** 24 V
0333006006 **131371**

Amp. 80, **B+** M8, **Intermittent load** 500 Amp., **Seconds** 5, **Coil bolt** M8

AS SS9005

ORIGINAL **CARGO** 12 V
0333009004 **131373**

Amp. 150, **B+** M8, **Intermittent load** 800 Amp., **Seconds** 5, **Coil bolt** M8

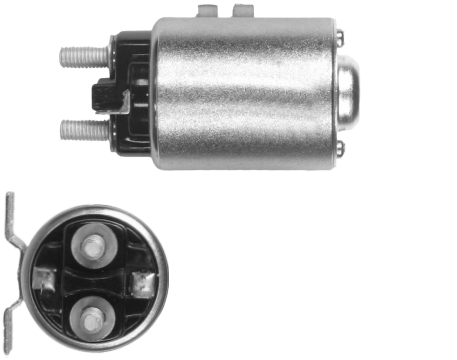

AS SS9006

ORIGINAL **CARGO** 24 V
0333009002 **131372**

Amp. 150, **B+** M8, **Intermittent load** 800 Amp., **Seconds** 5, **Coil bolt** M8

AS SS9007

ORIGINAL **CARGO** 12 V
443937150870 **136270**

B+ M8, **Coil bolt** M8

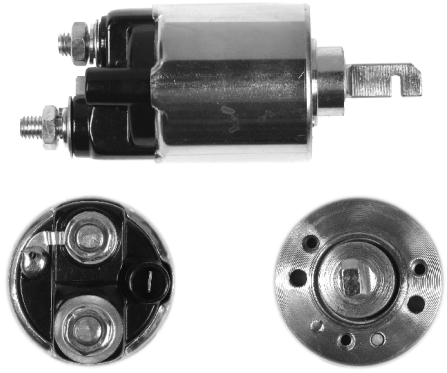

AS SS9008

CARGO 12 V
133290

B+ M8, **Coil bolt** M8

AS SS9009

CARGO 12 V
231681

B+ M10, **Coil bolt** M8

STARTER SOLENOIDS
OTHER

AS SS9010

FOR S9022

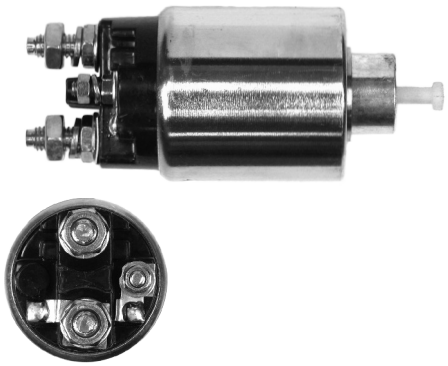

AS SS9011

FOR PG260NA

AS SS9012

NIKKO **CARGO** 12 V
0-47100-4100 **137811**
0-47100-4160
B+ M10, **Coil bolt** M8

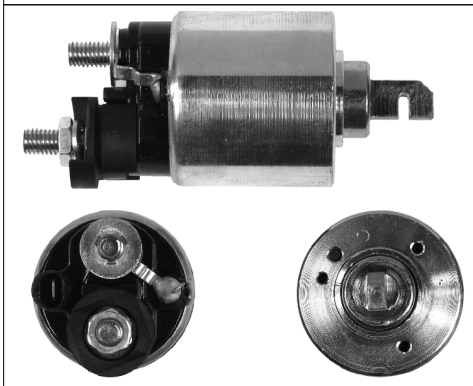

AS SS9013

HONDA **CARGO** 12 V
31210-P2A-004 **234160**
31210-P2C-004
B+ M8, **Coil bolt** M8

AS SS9014

FORD **CARGO** 12 V
233890

B+ M10, **Coil bolt** M10

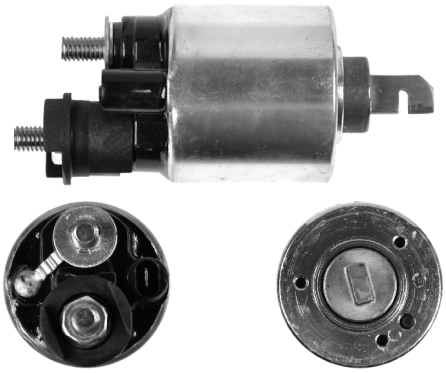

AS SS9015

HONDA **CARGO** 12 V
31210-P0A-004 **232004**

B+ M8, **Coil bolt** M8

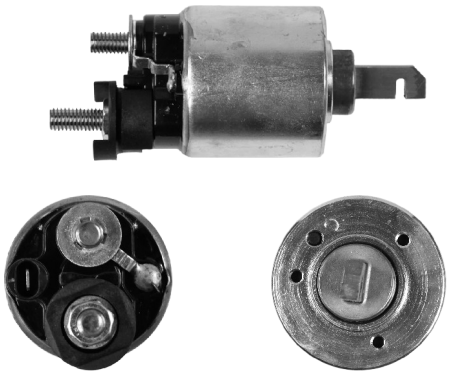

AS SS9016

HONDA **CARGO** 12 V
31210-PT0-01 **137023**

B+ M8, **Coil bolt** M8

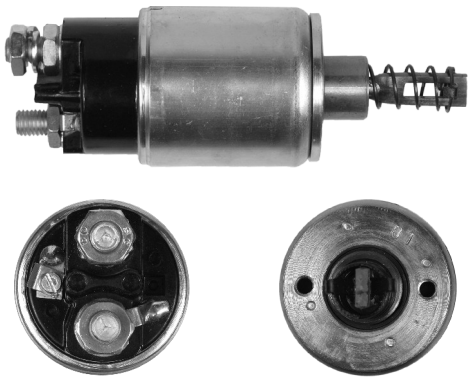

AS SS9017

ORIGINAL 12 V
962001
WE-11A
B+ M10, **Coil bolt** M10

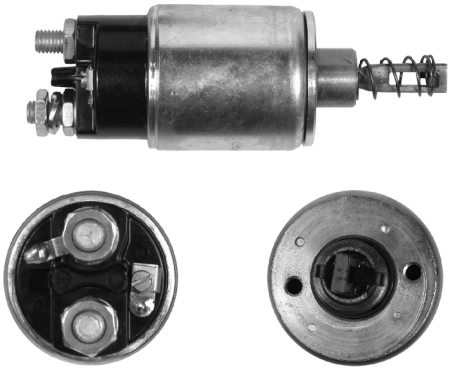

AS SS9018

ORIGINAL **CARGO** 24 V
9610010 **133096**
WE-10A
B+ M10, **Coil bolt** M10

STARTER SOLENOIDS
OTHER

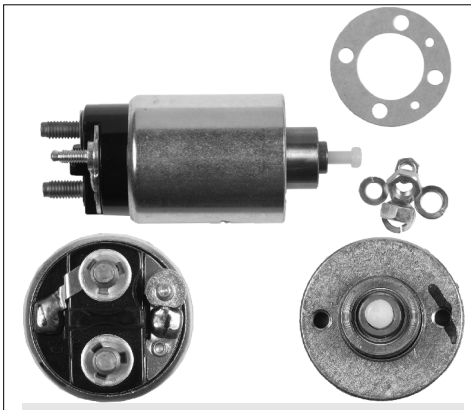

AS SS9019

ORIGINAL CARGO 12 V
F6VZ-11390-AA 231178

B+ M8, **Coil bolt** M8

AS SS9020

ORIGINAL CARGO 12 V
F75Z-11390-AA 231179
F8ZZ-11390-AA

B+ M8, **Coil bolt** M8

AS SS9021

ORIGINAL CARGO 12 V
B6AZ-11450-A 130493
BD7T-11450-T

Intermittent load 150 Amp.
Coil bolt 5/16" UNF

SOLENOID PARTS

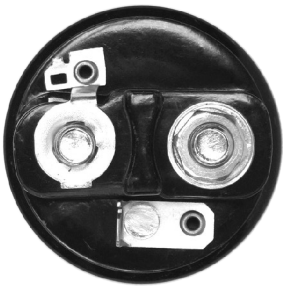

AS SP0001

CARGO
131315

O.D. 54.60, **No. of leads** 3

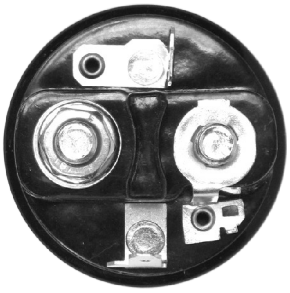

AS SP0002

ORIGINAL **CARGO**
1330516062 **131337**

O.D. 54.15, **No. of leads** 4

AS SP0003

ORIGINAL **CARGO**
1330516712 **131318**

O.D. 59.00, **No. of leads** 3

AS SP0004

CARGO
132275

Th. 3.90, **Shaft** 32.10

AS SP0005

CARGO
133573

Collar L. 20.45**, L.** 25.95, **Thread** M8

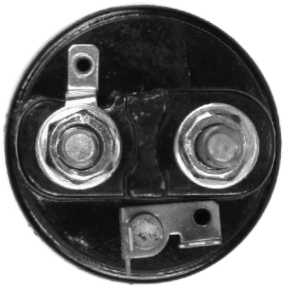

AS SP0006

ORIGINAL **CARGO**
1330516225 **133148**

O.D. 54.35, **No. of leads** 3

AS SP0007

ORIGINAL **CARGO**
1003421008 **139115**

Thread L. 10.70, **L.** 33.25, **Thread** M5

AS SP0008

CARGO
135195

O.D. 15.00, **I.D.** 8.00, **Th.** 3.90

AS SP0009

CARGO
131319

O.D. 59.00**, Terminals** 3

SOLENOID PARTS

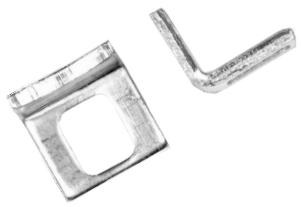

AS SP6001

ORIGINAL 28017-19502
CARGO 131831

Th. 2.50

AS SP6002

ORIGINAL 28017-19512
CARGO 131832

AS SP6003

ORIGINAL 028099-2690
CARGO 133601

AS SP6004

CARGO 133602

For 1 / 1.2 / 1.4 / 2 kW

AS SP6005

CARGO 133634

W. 3.00, **Thread** M10

AS SP6006

CARGO 133635

W. 2.50, **Thread** M8

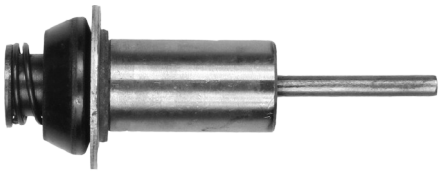

AS SP6007

ORIGINAL 053660-0401
CARGO 132563

O.D. 20.65, **L.** 96.50

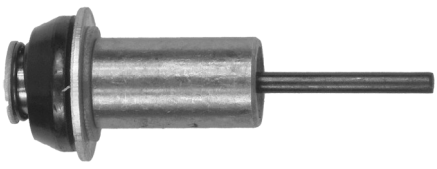

AS SP6008

ORIGINAL 053660-7120
CARGO 136374

O.D. 20.65, **L.** 96.40

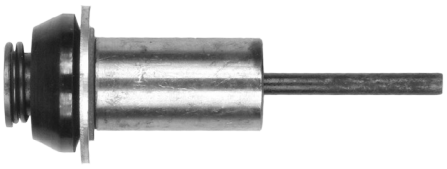

AS SP6009

ORIGINAL 053660-7240
CARGO 230221

O.D. 20.65, **L.** 96.80

SOLENOID PARTS

AS SP6010

ORIGINAL
28017-19500

CARGO
131830

AS SP6011

ORIGINAL
028099-7230

CARGO
135384

AS SP6012

CARGO
235638

L. 21.90, **Th.** 2.45, **W.** 15.50

AS SP6013

CARGO
233168

L. 25.00

AS SP6014

ORIGINAL
028099-2921
028099-3010
028099-3020
028099-3390

CARGO
132568

AS SP6015

ORIGINAL
028099-2690
028099-2691

CARGO
133601

For 2.5 / 4.5 kW

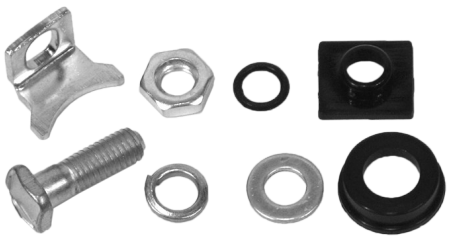

AS SP6016

ORIGINAL
028099-2680
028099-2820
028099-3030
028099-3031

CARGO
132567

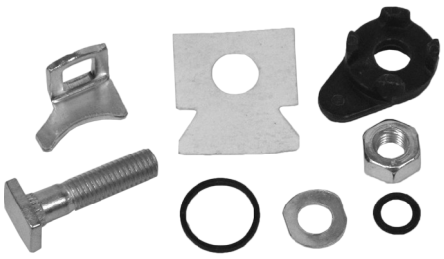

AS SP6017

ORIGINAL
028099-7202
028099-7800

CARGO
139494

For 2kW 12V

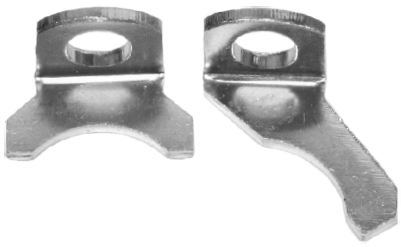

AS SP6018

CARGO
131833

SOLENOID PARTS

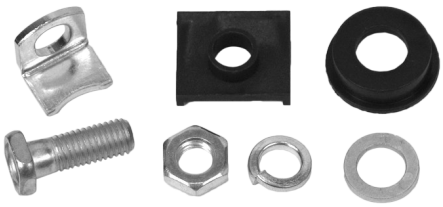

AS SP6019

ORIGINAL **CARGO**
028099-3160 **132565**

AS SP6020

ORIGINAL **CARGO**
028099-7210 **135385**
028099-7212
028099-7231

AS ST9001

cable for CS1245 / S9002

L. 200

STARTER LEVERS

AS SL0001

BOSCH	CARGO
1001933106	132808
1001933108	
1001933110	
1001933111	

AS SL0002

BOSCH	CARGO
2001933148	137617
2001933149	

AS SL3001

CARGO
134105

AS SL4001

CARGO
135335

AS SL5001

CARGO
239832

AS SL9001

CARGO
136636

IGNITION PARTS

AS IP0001

HUCO
138151

AS IP0002

HUCO
138152

AS IP0003

HUCO	ORIGINAL
138156	1237031292

AS IC9001

HUCO	ORIGINAL	CARGO
133800	0040100048	150505
	0986221001	
	CE2001412B1	
	297008291	

AS IC9002

HUCO	ORIGINAL	CARGO
133807	0036905100A	150509
	0040102030	
	0986221023	
	CE2003012B1	

AS IC9003

HUCO	ORIGINAL	CARGO
138803	60801005	150416
	1S7G-12029-AB	
	1E031810X	
	CE2004212B1	

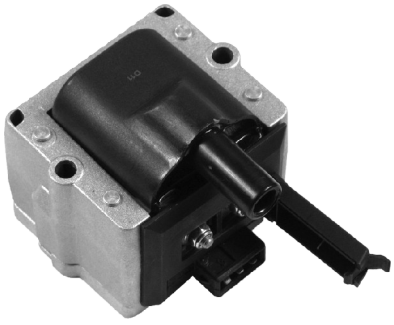

AS IC9004

HUCO	ORIGINAL
138419	0040100006
	5DA006623621
	0221601003
	867905104A

IGNITION PARTS

AS IM0001

HUCO	ORIGINAL	CARGO
138005	0227100140	150057
	1137010025	
	1227022017	
	1227022018	

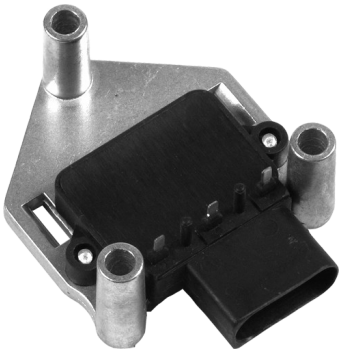

AS IM0002

HUCO	ORIGINAL	CARGO
138420	0221603006	150396
	0221603009	
	0221603010	

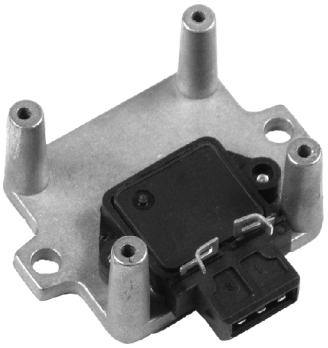

AS IM0003

HUCO	ORIGINAL	CARGO
138007	1227030030	150171

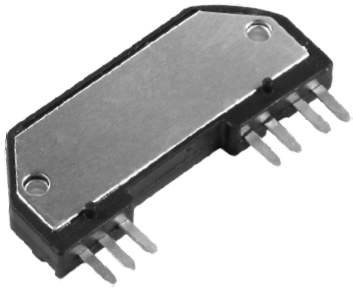

AS IM1001

HUCO	ORIGINAL	CARGO
138026	10482835	150063
	13010892	
	16010892	
	16140049	

AS IM1002

TRANSPO	ORIGINAL	CARGO
DM1978	10496048	150239
	10496541	
	10496784	
	1987465	

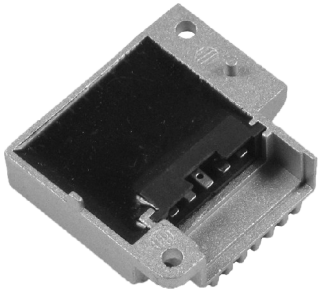

AS IM4001

HUCO	ORIGINAL	CARGO
138082	064833040	150088
	581701070000	
	9940096	
	BKL4A	

AS IM5001

HUCO	ORIGINAL	CARGO
138072	J007X00671	150160
	J007X00871	

STARTER BUSHINGS

AS SBU9001

ORIGINAL
1000301001

Internal dim.: 12.57 mm
External dim.: 16.56 mm
Thinkness: 11.50 mm

CARGO
140003

AS SBU9002

ORIGINAL
1000301021

Internal dim.: 11.07 mm
External dam.: 13.60 mm
Thinkness: 14.00 mm

CARGO
140008

AS SBU9003

ORIGINAL
1000301011

Internal dim.: 12.07 mm
External dim.: 16.12 mm
Thinkness: 16.00 mm

CARGO
140009

AS SBU9004

ORIGINAL
2000301000

Internal dim.: 12.57 mm
External dim.: 16.55 mm
Thinkness: 18.00 mm

CARGO
140010

AS SBU9005

ORIGINAL
2000301015

Internal dim.: 40.12 mm
External dim.: 48.04 mm
Thinkness: 10.50 mm

CARGO
140011

AS SBU9006

ORIGINAL
1000301002

Internal dim.: 12.56 mm
External dim.: 16.55 mm
Thinkness: 14.00 mm

CARGO
140012

AS SBU9007

ORIGINAL
1000301000

Internal dim.: 12.57 mm
External dim.: 16.55 mm
Thinkness: 15.80 mm

CARGO
140016

AS SBU9008

ORIGINAL
1000301012

Internal dim.: 12.06 mm
External dim.: 16.11 mm
Thinkness: 14.00 mm

CARGO
140017

AS SBU9009

ORIGINAL
2000301036

Internal dim.: 12.12 mm
External dim.: 14.11 mm
Thinkness: 13.80 mm

CARGO
140018

STARTER BUSHINGS

AS SBU9010

ORIGINAL
2000301043

Internal dim.: 14.06 mm
External dim.: 18.03 mm
Thinkness: 14.00 mm

CARGO
140019

AS SBU9011

ORIGINAL
2000301026

Internal dim.: 19.11 mm
External dim.: 23.08 mm
Thinkness: 9.80 mm

CARGO
140025

AS SBU9012

ORIGINAL
2000301041

Internal dim.: 19.10 mm
External dim.: 23.10 mm
Thinkness: 13.00 mm

CARGO
140026

AS SBU9013

ORIGINAL
1000301022

Internal dim.: 17.65 mm
External dim.: 21.60 mm
Thinkness: 9.50 mm

CARGO
140027

AS SBU9014

ORIGINAL
51914

Internal dim.: 12.07 mm
External dim.: 15.05 mm
Thinkness: 15.00 mm

CARGO
140043

AS SBU9015

ORIGINAL
2000301016

Internal dim.: 22.14mm
External dim.: 28.07 mm
Thinkness: 11.20 mm

CARGO
140111

AS SBU9016

ORIGINAL
1000301056

Internal dim.: 10.08 mm
External dim.: 14.04 mm
Thinkness: 9.90 mm

CARGO
140208

AS SBU9017

ORIGINAL
1000301054

Internal dim.: 8.09 mm
External dim.: 11.12 mm
Thinkness: 8.00 mm

CARGO
140249

AS SBU9018

ORIGINAL
1000301054L

Internal dim.: 8.09 mm
External dim.: 11.12 mm
Thinkness: 10.00 mm

CARGO
140250

STARTER BUSHINGS

AS SBU9019

ORIGINAL
1000301055

Internal dim.:	18.00 mm
External dim.:	22.10 mm
Thinkness:	8.00 mm

CARGO
140251

AS SBU9020

Internal dim.:	18.00 mm
External dim.:	22.10 mm
Thinkness:	6.00 mm

CARGO
140252

AS SBU9021

ORIGINAL
1000322005

Internal dim.:	10.04 mm
External dim.:	16.5/18.7 mm
Thinkness:	14.70 mm

CARGO
140563

AS SBU9022

ORIGINAL
1000390001

Internal dim.:	28.47 mm
External dim.:	32.30 mm
Thinkness:	11.00 mm

CARGO
140850

AS SBU9023

Internal dim.:	12.03 mm
External dim.:	15.04 mm
Thinkness:	10.00 mm

CARGO
140496

AS SBU9024

Internal dim.:	6.02 mm
External dim.:	10.04/13.8 mm
Thinkness:	8.6 mm

CARGO
140497

AS SBU9025

Internal dim.:	18.02 mm
External dim.:	22.04 mm
Thinkness:	5.00 mm

CARGO
140498

AS SBU9026

Internal dim.:	6.02 mm
External dim.:	9.04 mm
Thinkness:	7.00 mm

CARGO
140499

AS SBU9027

ORIGINAL
3471553

Internal dim.:	12.08 mm
External dim.:	14.08 mm
Thinkness:	14.00 mm

CARGO
140036

STARTER BUSHINGS

AS SBU9028

ORIGINAL
63212701

Internal dim.:	12.59 mm
External dim.:	18.55 mm
Thinkness:	19.60 mm

CARGO
140200

AS SBU9029

ORIGINAL
74860300

Internal dim.:	12.06 mm
External dim.:	16.01 mm
Thinkness:	14.00 mm

CARGO
140048

AS SBU9030

ORIGINAL
M409C32370

Internal dim.:	12.02 mm
External dim.:	16.00 mm
Thinkness:	9.50 mm

CARGO
140429

AS SBU9031

ORIGINAL
2114-5352

Internal dim.:	12.50 mm
External dim.:	16.05 mm
Thinkness:	12.00 mm

CARGO
140311

AS SBU9032

ORIGINAL
028403-0081

Internal dim.:	12.52 mm
External dim.:	14.72 mm
Thinkness:	14.00 mm

CARGO
140326

AS SBU9033

ORIGINAL
9001330323

Internal dim.:	12.55 mm
External dim.:	16.56 mm
Thinkness:	9.90 mm

CARGO
140423

AS SBU9034

ORIGINAL **SET FOR R10 / R11**
851992.0
851402.1
851502.0
851726.0
851734.0

AS SBU9035

ORIGINAL
2000301013

Internal dim.:	10.08 mm
External dim.:	14.09 mm
Thinkness:	13.00 mm

CARGO
140014

AS SBU9036

ORIGINAL
74860380

Internal dim.:	10.08 mm
External dim.:	14.02 mm
Thinkness:	15.00 mm

CARGO
140047

STARTER BUSHINGS

AS SBU9037

ORIGINAL
74868210

Internal dim.: 10.08 mm
External dim.: 14.02 mm
Thinkness: 13.50 mm

CARGO
140050

AS SBU9038

ORIGINAL
72365010

Internal dim.: 20.31 mm
External dam.: 24.00 mm
Thinkness: 13.90 mm

CARGO
140201

AS SBU9039

ORIGINAL
62362910

Internal dim.: 14.16 mm
External dim.: 20.06 mm
Thinkness: 12.00 mm

CARGO
140202

AS SBU9040

ORIGINAL
9001140347

Internal dim.: 10.05 mm
External dim.: 16.55 mm
Thinkness: 11.50 mm

CARGO
140204

AS SBU9041

ORIGINAL
1000301083

Internal dim.: 10.00 mm
External dim.: 14.00 mm
Thinkness: 12.00 mm

CARGO
140319

AS SBU9042

ORIGINAL
54257833

Internal dim.: 12.75 mm
External dim.: 19.14 mm
Thinkness: 14.00 mm

CARGO
140656

AS SBU9043

ORIGINAL
54255966

Internal dim.: 17.07 mm
External dim.: 21.05 mm
Thinkness: 22.00 mm

CARGO
140658

AS SBU9044

ORIGINAL
54256151

Internal dim.: 28.56 mm
External dim.: 31.77 mm
Thinkness: 13.00 mm

CARGO
140659

AS SBU9045

for:
D7G11

Internal dim.: 7.02 mm
External dim.: 10.00 mm
Thinkness: 6.10 mm

CARGO
140734

STARTER BUSHINGS

AS SBU9046

ORIGINAL
1000301062

Internal dim.: 12.57 mm
External dim.: 16.60 mm
Thinkness: 10.00 mm

CARGO
140856

AS SBU9047

for:
97BB-11000-BB
97BB-11000-BC

Internal dim.: 8.12 mm
External dim.: 12.45 mm
Thinkness: 10.00 mm

CARGO
140987

AS SBU9048

ORIGINAL
9003330317

Internal dim.: 10.03 mm
External dim.: 16.02 mm
Thinkness: 10.00 mm

CARGO
140988

AS SBU9049

for:
S114-829/A/B/C/D

Internal dim.: 12.10 mm
External dim.: 16.03 mm
Thinkness: 5.50 mm

CARGO
141198

AS SBU9050

ORIGINAL
MD618334

Internal dim.: 10.10 mm
External dim.: 12.95 mm
Thinkness: 10.45 mm

CARGO
140731

AS SBU9051

ORIGINAL
1000390001

Internal dim.: 28.35 mm
External dim.: 32.25 mm
Thinkness: 10.00 mm

CARGO
140850

1 2

AS SBU9052

1 Internal dim.: 12.00 mm 2 Internal dim.: 08.50 mm
1 External dim.: 24/19 mm 2 External dim.: 11.50 mm
1 Thinkness: 13.00 mm 2 Thinkness: 12.50 mm

FOR 497401

STARTER REPAIR SETS

AS SRS0001

CARGO Includes:
136252 - SRS0002
- BSX148

For FKB-24V

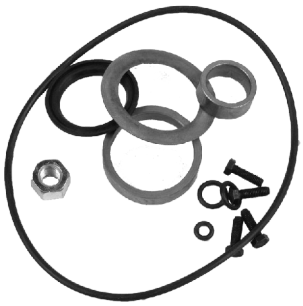

AS SRS0002

ORIGINAL **CARGO**
F1DU-10576-A **136250**

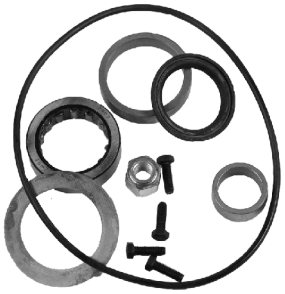

AS SRS0003

ORIGINAL **CARGO**
1987010000 **137016**

For FKB

AS SRS0004

CARGO
138412

Terminal 30: M12
Terminal 31: M10 insulated

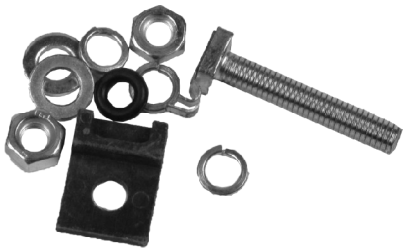

AS SRS0005

ORIGINAL **CARGO**
2007011029 **134607**

Terminal 50

AS SRS0006

ORIGINAL **CARGO**
2007011060 **133604**

AS SRS0007

ORIGINAL **CARGO**
2007011070 **139071**

Terminal 50
New type

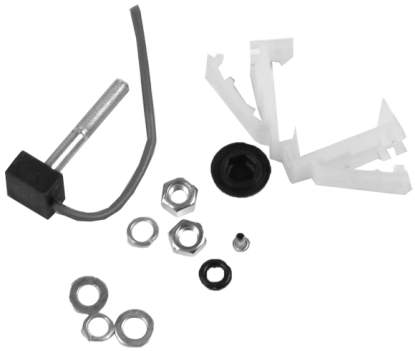

AS SRS0008

ORIGINAL **CARGO**
2007011072 **231645**

Terminal 50

AS SRS0009

CARGO
230022

Terminal 30: M10
Terminal 31: M10 insulated
New type

STARTER REPAIR SETS

AS SRS0010

CARGO
230019

Terminal 30:M12
Terminal 31: M12 insulated
New type

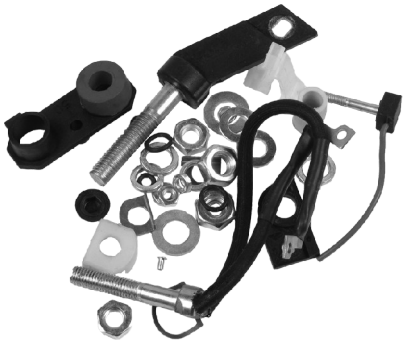

AS SRS0011

CARGO
230024

Terminal 30: M12
Terminal 31: M10 insulated
New type

AS SRS0012

CARGO
230021

Terminal 30: M10
Terminal 31: M10 grounded
New type

AS SRS0013

CARGO
230023

Terminal 30: M12
Terminal 31: M10 grounded
New type

AS SRS0014

ORIGINAL **CARGO**
2004632026 **138927**

Terminal 30: M10
Terminal 31: M10

AS SRS0015

IKA **CARGO**
4 3394 0 **139292**

Terminal 30: M12
Terminal 31: M10 grounded

AS SRS0016

ORIGINAL **CARGO**
2004449086 **133308**
2004449002

Terminal 30: M10
Terminal 31: M10 insulated

AS SM0001

Repair set for: BOSCH 0001218...

AS SM0002

Repair set for: BOSCH 0001368...

AS ATP4001

LUCAS	CARGO
54960402	132804
60600983	

Metal warehouse basket

Length	120
Depth	80
Height	100

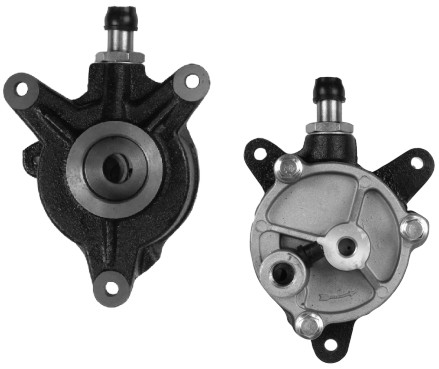

AS P4003

CARGO
135981

AS CO9001

Clothes: overalls	**Sizes: XS - 164**
	S - 170
with AS logos	**M - 176**
	L - 182
colors: black / red	**XL - 188**
	XXL - 194

MACHINES AND PARTS

AS M0001

Big sand blasting machine

1480x1200x3450

AS M0002

MODEL: 12/24 V
OPAL ABR 41100

For testing car alternators and starters

AS M0003

Sand blasting machine

1480x1200x2420

AS M0004

Cleaning Machine

In offer also: M0004R - rebuild

AS M0005

Cleaning Machine

AS M0006

Hand welding machine

MP0007 - Tip for welding machine
MP0008 - 2 meters of Flux 0,2 x 4
MP0009 - 2 meters of Flux 0,15 x 3

AS M0007

Cleaning Machine

MACHINES AND PARTS

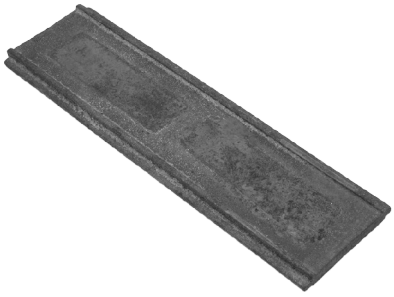

AS MP0001

MACHINE PART

for M0001 / M0003

AS MP0002

MACHINE PART

for M0001 / M0003

AS MP0003(25KG)

Steel Shot

S 170 - 0,425 mm

AS MP0004(25KG)

Steel Shot

S 230 - 0,600 mm

AS MP0005(25KG)

Steel Shot

AS MP0006

Filters

for M0001 / M0003

white bags for machine

AS MP0007

Tip

for M0006 - Hand welding machine

AS MP0008

2 meters of Flux 0,2 x 4

for M0006 - Hand welding machine

AS MP0009

2 meters of Flux 0,15 x 3

for M0006 - Hand welding machine

BUSHING SURVEY

I.D	O.D	Length	AS
6.02	10.04/13.8	8.6	**SBU9024**
6.02	9.04	7.00	**SBU9026**
7.02	10.00	6.10	**SBU9045**
8.09	11.12	10.00	**SBU9018**
8.09	11.12	8.00	**SBU9017**
8.12	12.45	10.00	**SBU9047**
8.50	11.50	12.50	**SBU9052**
10.00	14.00	12.00	**SBU9041**
10.03	16.02	10.00	**SBU9048**
10.04	16.5/18.7	14.70	**SBU9021**
10.05	16.55	11.50	**SBU9040**
10.08	14.02	13.50	**SBU9037**
10.08	14.02	15.00	**SBU9036**
10.08	14.04	9.90	**SBU9016**
10.08	14.09	13.00	**SBU9035**
10.10	12.95	10.45	**SBU9050**
11.07	13.60	14.00	**SBU9002**
12.00	24/19	13.00	**SBU9052**
12.02	16.00	9.50	**SBU9030**
12.03	15.04	10.00	**SBU9023**
12.06	16.01	14.00	**SBU9029**
12.06	16.11	14.00	**SBU9008**
12.07	15.05	15.00	**SBU9014**
12.07	16.12	16.00	**SBU9003**
12.08	14.08	14.00	**SBU9027**
12.10	16.03	5.50	**SBU9049**

I.D	O.D	Length	AS
12.12	14.11	13.80	**SBU9009**
12.50	16.05	12.00	**SBU9031**
12.52	14.72	14.00	**SBU9032**
12.55	16.56	9.90	**SBU9033**
12.56	16.55	14.00	**SBU9006**
12.57	16.55	15.80	**SBU9007**
12.57	16.55	18.00	**SBU9004**
12.57	16.56	11.50	**SBU9001**
12.57	16.60	10.00	**SBU9046**
12.59	18.55	19.60	**SBU9028**
12.75	19.14	14.00	**SBU9042**
14.06	18.03	14.00	**SBU9010**
14.16	20.06	12.00	**SBU9039**
17.07	21.05	22.00	**SBU9043**
17.65	21.60	9.50	**SBU9013**
18.00	22.10	6.00	**SBU9020**
18.00	22.10	8.00	**SBU9019**
18.02	22.04	5.00	**SBU9025**
19.10	23.10	13.00	**SBU9012**
19.11	23.08	9.80	**SBU9011**
20.31	24.00	13.90	**SBU9038**
22.14	28.07	11.20	**SBU9015**
28.35	32.25	10.00	**SBU9051**
28.47	32.30	11.00	**SBU9022**
28.56	31.77	13.00	**SBU9044**
40.12	48.04	10.50	**SBU9005**

BEARING SURVEY

I.D.	O.D.	Height	AS
08.00	22.00	07.00	**ABE9010**
08.00	22.00	11.00	**ABE9011**
08.00	23.00	11.00	**ABE9012**
08.00	23.00	14.00	**ABE9014**
08.00	23.00	14.00	**ABE9027**
09.00	26.00	08.00	**ABE9042**
10.00	26.00	08.00	**ABE9019**
10.00	30.00	09.00	**ABE9001**
10.00	23.00	11.00	**ABE9013**
10.00	27.00	11.00	**ABE9015**
10.00	27.00	14.00	**ABE9032**
12.00	28.00	08.00	**ABE9034**
12.00	16.00	10.00	**ABE9045**
12.00	32.00	10.00	**ABE9002**
12.00	28.00	12.00	**ABE9008**
12.00	32.00	14.00	**ABE9007**
15.00	32.00	09.00	**ABE9020**
15.00	32.00	10.00	**ABE9003**
15.00	32.00	11.00	**ABE9036**
15.00	35.00	11.00	**ABE9033**
15.00	35.00	11.00	**ABE9037**
15.00	35.00	13.00	**ABE9016**
15.00	35.00	13.00	**ABE9030**
15.00	42.00	13.00	**ABE9005**
15.00	43.00	13.00	**ABE9023**
15.00	46.00	14.00	**ABE9017**

I.D.	O.D.	Height	AS
15.00	47.00	14.00	**ABE9028**
15.00	52.00	16.00	**ABE9026**
15.00	38.00	19.00	**ABE9031**
17.00	35.00	10.00	**ABE9021**
17.00	35.00	10.00	**ABE9039**
17.00	40.00	12.00	**ABE9004**
17.00	47.00	14.00	**ABE9006**
17.00	52.00	16.00	**ABE9024**
17.00	52.00	17.00	**ABE9018**
17.00	62.00	17.00	**ABE9029**
17.00	62.00	17.50	**ABE9041**
17.00	62.00	20.00	**ABE9044**
17.00	52.00	21.00	**ABE9025**
20.00	42.00	12.00	**ABE9035**
20.00	52.00	15.00	**ABE9040**
20.00	52.00	21.00	**ABE9022**
25.00	52.00	15.00	**ABE9038**
29.00	36.00	13.00	**ABE9043**
34.00	48.00	15.00	**ABE9009**

PART 3

ALTERNATORS
STARTERS
PARTS

REFERENCE GUIDE
O.E.M. No. - AS No.

A.I.M	AS	PRODUCT
AD-0713D	ARD9001	Diode
AD-0713D1.5	ARD9002	Diode

ALFA ROMEO	AS	PRODUCT
46473784	S0195	Starter
46532669	A0191	Alternator
46791692	S0241	Starter
60812583	A4027	Alternator
60812713	A4025	Alternator
60813461	S0241	Starter
60814911	S0195	Starter
60815944	A4034	Alternator
60816045	A4043	Alternator
60816046	A4023	Alternator
60816083	S0230	Starter
60816557	A4043	Alternator
60816954	A4034	Alternator

AVF	AS	PRODUCT
001/004	S0003	Starter
001/109	S0003	Starter
001/504	S0003	Starter
001/506	S0003	Starter
001/507	S0003	Starter
001/508	S0003	Starter
001/605	S0003	Starter
001/609	S0003	Starter
001/702	S0003	Starter
001/706	S0003	Starter
001/803	S0003	Starter
001/806	S0003	Starter
001/809	S0003	Starter
001/810	S0003	Starter
001/811	S0003	Starter
001/903	S0003	Starter
001/905	S0003	Starter
001/911	S0003	Starter
002/009	S0001	Starter
002/010	S0001	Starter
002/103	S0001	Starter
002/105	S0001	Starter
002/206	S0001	Starter
002/306	S0001	Starter
002/508	S0001	Starter
002/509	S0001	Starter
002/511	S0001	Starter
002/601	S0001	Starter
002/608	S0001	Starter
002/611	S0001	Starter
002/702	S0001	Starter
002/703	S0216	Starter
002/704	S0001	Starter
002/801	S0001	Starter
002/802	S0001	Starter
002/803	S0001	Starter
002/806	S0001	Starter
002/808	S0001	Starter
002/809	S0001	Starter
002/901	S0001	Starter
002/902	S0003	Starter
002/903	S0001	Starter
002/904	S0001	Starter
002/906	S0001	Starter
002/907	S0001	Starter

AVF	AS	PRODUCT
002/909	S0001	Starter
002/911	S0001	Starter
808002	S0001	Starter
IM18	S9067	Starter
IM310	S0003	Starter
IM325	S0007	Starter
IM360	S0003	Starter
IM361	S0220(BOSCH)R	Starter
IM502	S0001	Starter
IM504	S0134	Starter
IM505	S0063	Starter
IM508	S0216	Starter
IM509	S0216	Starter
IM510	S0003	Starter
IM511	S0221(BOSCH)R	Starter
IM513	S0063	Starter
IM522	S0151	Starter
IM536	S0011	Starter
IM562	S0023	Starter
IM601	S0003	Starter
IM606	S0008	Starter
IM623	S0009	Starter
IM642	S0065	Starter
IM643	S0010	Starter
IM645	S0220(BOSCH)R	Starter
IM647	S0061	Starter
IM653	S0022	Starter
IM801	S0003	Starter

BEARING	AS	PRODUCT
60002RS	ABE9019	Bearing
60012RS	ABE9034	Bearing
60022RS	ABE9020	Bearing
60032RS	ABE9021	Bearing
60042RS	ABE9035	Bearing
6082RS	ABE9010	Bearing
62002RS	ABE9001	Bearing
62012RS	ABE9002	Bearing
62022RS	ABE9003	Bearing
62032RS	ABE9004	Bearing
62052RS	ABE9038	Bearing
622012RS1	ABE9007	Bearing
63022RS	ABE9005	Bearing
63032RS	ABE9006	Bearing
6303LH	ABE9028	Bearing
6403	ABE9029	Bearing
6900BPL	ABE9013	Bearing

BEARING SIZE	AS	PRODUCT
10/23x11	ABE9013	Bearing
10/26x8	ABE9019	Bearing
10/27x11	ABE9015	Bearing
10/27x14	ABE9032	Bearing
10/30x9	ABE9001	Bearing
12/16x10	ABE9045	Bearing
12/28x12	ABE9008	Bearing
12/28x8	ABE9034	Bearing
12/32x10	ABE9002	Bearing
12/32x14	ABE9007	Bearing
15/32x11	ABE9036	Bearing
15/32x9	ABE9020	Bearing
15/35x11	ABE9003	Bearing
15/35x13	ABE9016	Bearing

BEARING SIZE	AS	PRODUCT
15/38x19	ABE9031	Bearing
15/42x13	ABE9005	Bearing
15/43x13	ABE9023	Bearing
15/46x14	ABE9017	Bearing
15/47x14	ABE9028	Bearing
15/52x16	ABE9026	Bearing
17/35x10	ABE9021	Bearing
17/40x12	ABE9004	Bearing
17/47x14	ABE9006	Bearing
17/52x16	ABE9024	Bearing
17/52x17	ABE9018	Bearing
17/52x21	ABE9025	Bearing
17/62x17	ABE9029	Bearing
17/62x17.5	ABE9041(NSK)	Bearing
17/62x20	ABE9044	Bearing
20/42x12	ABE9035	Bearing
20/52x15	ABE9040(NSK)	Bearing
20/52x21	ABE9022	Bearing
25/52x15	ABE9038	Bearing
29/36x13	ABE9043	Bearing
34/48x15	ABE9009	Bearing
8/22x11	ABE9011	Bearing
8/22x7	ABE9010	Bearing
8/23x11	ABE9012	Bearing
8/23x14	ABE9014	Bearing
9/26x8	ABE9042(NSK)	Bearing

BELARUS	AS	PRODUCT
24073708000	S9018	Starter

BERU	AS	PRODUCT
0040100006	IC9004	Ignition Coil
0040100018	IC9004	Ignition Coil
0040100025	IC9004	Ignition Coil
0040100046	IC9004	Ignition Coil
0040100048	IC9001	Ignition Coil
0040100052	IC9001	Ignition Coil
0040100071	IC9001	Ignition Coil
0040100350	IC9003	Ignition Coil
0040102001	IC9004	Ignition Coil
0040102014	IC9004	Ignition Coil
0040102030	IC9002	Ignition Coil
0040102035	IC9003	Ignition Coil
0040401003	IM0001	Ignition Module
0040401013	IM0003	Ignition Module
0040401016	IM1001	Ignition Module
0040402001	IC9004	Ignition Coil
ZM000	IM0002	Ignition Module
ZM003	IM0001	Ignition Module
ZM013	IM0003	Ignition Module
ZM016	IM1001	Ignition Module
ZS052	IC9001	Ignition Coil
ZS350	IC9003	Ignition Coil
ZSE030	IC9002	Ignition Coil

BMW	AS	PRODUCT
11314466271	AFP0044	FW pulley
12311079452	A6034	Alternator
12311247487	A0161	Alternator
12311247488	A0161	Alternator
12311432977	A0157	Alternator
12311432978	A0157	Alternator
12311432982	A0157	Alternator
12311432983	A0157	Alternator

BMW	AS	PRODUCT
12311432986	A0071	Alternator
12311432987	A0071	Alternator
12311435423	A0162	Alternator
12311435424	A0162	Alternator
12311435425	A0162	Alternator
12311435426	A0162	Alternator
12311435429	A0162	Alternator
12311705483	A0226	Starter
12311713449	A0070	Alternator
12311713450	A0070	Alternator
12311713491	ARE0010	Regulator
12311714219	A0070	Alternator
12311718983	A0070	Alternator
12311726602	A0070	Alternator
12311726603	A0070	Alternator
12311730257	A0070	Alternator
12311730580	A3062	Alternator
12311735743	A3062	Alternator
12311735792	A3062	Alternator
12311738351	A0156	Alternator
12311740624	A0157	Alternator
12311740633	A0157	Alternator
12311744560	A3062	Alternator
12311744562	A3062	Alternator
12311744563	A0156	Alternator
12311744567	A0156	Alternator
12312244833	A3075	Alternator
12312244883	A3075	Alternator
12312244884	A3075	Alternator
12312245576	A3066	Alternator
12312245654	A3066	Alternator
12312246070	A3065	Alternator
12312246078	A3065	Alternator
12312246572	A3065	Alternator
12312246573	A3065	Alternator
12312247389	A3072	Alternator
12312248296	A3094	Alternator
12312248297	A3094	Alternator
12312249966	A3087	Alternator
12317501592	A0157	Alternator
12317501593	A0071	Alternator
12317501595	A0071	Alternator
12317501597	A0071	Alternator
12317501599	A0071	Alternator
12317501690	A0071	Alternator
12317501755	A0071	Alternator
12317508052	A0226	Starter
12317508054	A0226	Starter
12317508113	A0162	Alternator
12317508258	A0226	Starter
12317508286	A0226	Starter
12317509100	A0162	Alternator
12317509113	A0162	Alternator
12317509342	A6036	Alternator
12317512151	A0216	Alternator
12317512162	A0216	Alternator
12317515029	A6036	Alternator
12317515030	A6034	Alternator
12317516098	A0216	Alternator
12317516099	AFP0044	FW pulley
12317516101	A0217	Alternator
12317516103	AFP0028	FW pulley
12317516104	A0217	Alternator
12317516107	A0216	Alternator
12317516723	A0217	Alternator
12317519721	A0221	Alternator
12317521135	A0221	Alternator
12317521137	A0221	Alternator
12317521382	A0220	Alternator
12317521383	A0220	Alternator
12317521488	A0220	Alternator
12317521489	A0220	Alternator
12317523897	A0159	Alternator
12317532964	A0220	Alternator
12317532968	A0220	Alternator
12317541694	A0221	Alternator
12317541696	A0221	Alternator
12317546284	A0221	Alternator
12317550319	A0210	Alternator
12317550997	A0210	Alternator
12317552352	AFP0044	FW pulley
12317552353	AFP0028	FW pulley
12317560483	AFP0028	FW pulley
12317560678	AFP0068	FW pulley
12317561556	AFP0069	FW pulley
12317575518	AFP0069	FW pulley
12317787346	A3087	Alternator
12317788222	A3087	Alternator
12317788223	A3087	Alternator
12317788247	A3087	Alternator
12317789980	A3070	Alternator
12317789981	A3098R	Alternator
12317789983	A3070	Alternator
12317790879	A6023	Alternator
12317791334	A6023	Alternator
12317792072	A3098R	Alternator
12317792092	A3094	Alternator
12317792878	A3112	Alternator
12317797521	A3098R	Alternator
12317797522	A3098R	Alternator
12317797523	A3112	Alternator
12317797660	A3070	Alternator
12317799204	A3098R	Alternator
12317802929	A3098R	Alternator
12411266463	S0044	Starter
12411279747	S0052	Starter
12411489995	S0226	Starter
12411517328	S0226	Starter
12411712937	S0073	Starter
12411714750	S0044	Starter
12411715238	S0044	Starter
12411726463	S0044	Starter
12411726504	S0052	Starter
12411726508	S0052	Starter
12411735400	S0044	Starter
12411740373	S0073	Starter
12411740374	S0073	Starter
12411740375	S0073	Starter
12411740378	S0044	Starter
12411740379	S0044	Starter
12412246570	S0093	Starter
12412246571	S0093	Starter
12412247063	S4031	Starter
12412247391	S4035	Starter
12412247492	S4035	Starter
12412249295	S4031	Starter
12412306001	S3035	Starter
12412306700	S3035	Starter
12414496934	S4031	Starter
12417501668	S0073	Starter
12417501738	S0073	Starter
12417508634	S0215	Starter
12417508636	S0215	Starter
12417515390	S0073	Starter
12417515391	S0073	Starter
12417515392	S0073	Starter
12417521116	S0242	Starter
12417521122	S0242	Starter
12417521123	S0242	Starter
12417523450	S0244	Starter
12417524843	S0244	Starter
12417526236	S0242	Starter
12417570488	S0226	Starter
12417785691	S0093	Starter
12417785715	S0093	Starter
12417787925	S4035	Starter
12417788680	S0093	Starter
12417788682	S0093	Starter
12417791335	S6032	Starter
12417794952	S0228	Starter
12417796892	S0228	Starter
12417798035	S0228	Starter
12417798036	S0228	Starter
12417803514	S3029	Starter
12419069808	S0093	Starter
1489995	S0226	Starter
1517328	S0226	Starter
4466273	AFP0028	FW pulley
7509342	A6036	Alternator
7515029	A6036	Alternator
7515029-02	A6036	Alternator
7515030	A6034	Alternator
7521122-03	S0242	Starter
7521123-04	S0242	Starter
7523450	S0244	Starter
7523450-01	S0244	Starter
7523450-03	S0244	Starter
7523897	A0159	Alternator
7570488	S0226	Starter
7788680	S0093	Starter
7790879	A6023	Alternator
7792072	A3098R	Alternator
7792072AI01	A3098R	Alternator
7792878	A3112	Alternator
7797523	A3112	Alternator

BOMAG	AS	PRODUCT
05710901	S9044	Starter
05710905	S9044	Starter
05710917	S9044	Starter
05710923	S9044	Starter
05710927	S9044	Starter
05710990	S9044	Starter
05710991	S9044	Starter
05710992	S9044	Starter
05719897	S9044	Starter
5726892	ARC0061	Rectifier

BOSCH	AS	PRODUCT
00010DA12E	S9062	Starter
00010EA6EE	S0153	Starter
0001106001	S0072	Starter
0001106002	S0072	Starter
0001106011	S3003	Starter
0001106012	S0225	Starter
0001106015	S3003	Starter
0001106016	S0103	Starter
0001106017	S0225	Starter
0001106018	S0226	Starter
0001106022	S0225	Starter
0001106023	S0223(BOSCH)	Starter
0001106024	S0223(BOSCH)	Starter
0001107003	S0083	Starter
0001107004	S0083	Starter
0001107005	S0131	Starter
0001107006	S0131	Starter
0001107007	S0072	Starter
0001107008	S0072	Starter
0001107010	S0239	Starter
0001107015	S0126	Starter
0001107016	S0158	Starter
0001107017	S0054	Starter
0001107018	S0054	Starter
0001107019	S3009	Starter
0001107020	S0062	Starter
0001107021	S0062	Starter
0001107022	S0033	Starter
0001107023	S0033	Starter
0001107025	S0104	Starter
0001107026	S0104	Starter
0001107028	S0126	Starter
0001107030	S0238	Starter
0001107031	S0028	Starter
0001107033	S3045	Starter
0001107034	S0098	Starter
0001107037	S0087	Starter
0001107038	S0239	Starter
0001107043	S0096	Starter
0001107044	S0126	Starter
0001107045	S0098	Starter
0001107047	S3004	Starter
0001107048	S0087	Starter
0001107049	S0028	Starter
0001107052	S0062	Starter
0001107053	S0062	Starter
0001107054	S0054	Starter
0001107055	S0054	Starter
0001107056	S0098	Starter
0001107059	S0157	Starter
0001107062	S3045	Starter
0001107063	S3009	Starter
0001107066	S0241	Starter
0001107067	S3030	Starter
0001107068	S0054	Starter
0001107069	S0054	Starter
0001107070	S0240	Starter
0001107071	S0240	Starter
0001107072	S0087	Starter
0001107073	S0054	Starter
0001107074	S0054	Starter
0001107075	S0238	Starter
0001107077	S0141	Starter
0001107082	S0157	Starter
0001107083	S0232	Starter
0001107087	S0096	Starter
0001107088	S0168	Starter
0001107092	S0239	Starter
0001107096	S0087	Starter
0001107098	S0141	Starter
0001107100	S0098	Starter
0001107101	S0098	Starter
0001107103	S0104	Starter
0001107104	S0104	Starter
0001107108	S0098	Starter
0001107401	S0088	Starter
0001107402	S0088	Starter
0001107403	S0087	Starter
0001107404	S0088	Starter
0001107405	S0088	Starter
0001107406	S0227	Starter
0001107407	S0096	Starter
0001107408	S0088	Starter
0001107409	S0088	Starter
0001107410	S0185	Starter
0001107411	S0241	Starter
0001107415	S0102	Starter
0001107417	S0096	Starter
0001107418	S0185	Starter
0001107423	S0242	Starter
0001107424	S0242	Starter
0001107425	S0244	Starter
0001107426	S0244	Starter
0001107427	S0171	Starter
0001107428	S0171	Starter
0001107429	S0100	Starter
0001107430	S0232	Starter
0001107431	S0102	Starter
0001107432	S0102	Starter
0001107433	S0168	Starter
0001107434	S0168	Starter
0001107435	S0088	Starter
0001107436	S0088	Starter
0001107437	S0100	Starter
0001107438	S0121	Starter
0001107439	S0121	Starter
0001107442	S0073	Starter
0001107443	S0073	Starter
0001107448	S0121	Starter
0001107449	S0121	Starter
0001107499	S0096	Starter
0001107500	S0096	Starter
0001108001	S0015	Starter
0001108002	S0015	Starter
0001108005	S0057	Starter
0001108006	S0057	Starter
0001108009	S0015	Starter
0001108010	S0015	Starter
0001108016	S0015	Starter
0001108017	S0015	Starter
0001108018	S0052	Starter
0001108026	S0015	Starter
0001108027	S0015	Starter
0001108028	S0015	Starter
0001108029	S0015	Starter
0001108030	S0055	Starter
0001108031	S0031	Starter
0001108032	S0058	Starter
0001108043	S0187	Starter
0001108046	S0058	Starter
0001108047	S0034	Starter
0001108051	S3052	Starter
0001108052	S0031	Starter
0001108053	S1013	Starter
0001108054	S0044	Starter
0001108056	S0031	Starter
0001108064	S0052	Starter
0001108065	S0044	Starter
0001108066	S0058	Starter
0001108068	S0058	Starter
0001108069	S0058	Starter
0001108072	S0015	Starter
0001108073	S0015	Starter
0001108078	S0034	Starter
0001108079	S0034	Starter
0001108086	S3031	Starter
0001108088	S0055	Starter
0001108092	S0056	Starter
0001108094	S0057	Starter
0001108095	S0057	Starter
0001108099	S9008	Starter
0001108101	S0015	Starter
0001108102	S0015	Starter
0001108103	S0058	Starter
0001108104	S0058	Starter
0001108107	S0059	Starter
0001108108	S0044	Starter
0001108113	S0030	Starter
0001108114	S0030	Starter
0001108115	S0044	Starter
0001108121	S0124	Starter
0001108122	S9031	Starter
0001108124	S0087	Starter
0001108127	S0057	Starter
0001108129	S3045	Starter
0001108134	S0058	Starter
0001108138	S3031	Starter
0001108143	S3052	Starter
0001108149	S0087	Starter
0001108151	S0034	Starter
0001108153	S0059	Starter
0001108154	S0031	Starter
0001108157	S0073	Starter
0001108166	S0059	Starter
0001108167	S0059	Starter
0001108171	S0034	Starter
0001108180	S3052	Starter
0001108182	S3052	Starter
0001108183	S3002	Starter
0001108184	S0034	Starter
0001108186	S3052	Starter
0001108190	S0073	Starter
0001108197	S0136	Starter
0001108202	S0186R	Starter
0001108204	S0246	Starter
0001108234	S0186R	Starter

BOSCH	AS	PRODUCT
0001108235	S0186R	Starter
0001108400	S3002	Starter
0001108401	S0073	Starter
0001108403	S0136	Starter
0001108404	S0136	Starter
0001108409	S0136	Starter
0001108410	S0136	Starter
0001109001	S0187	Starter
0001109002	S0187	Starter
0001109008	S0211	Starter
0001109014	S0026	Starter
0001109015	S0036	Starter
0001109017	S0208	Starter
0001109018	S0105	Starter
0001109021	S0176	Starter
0001109022	S0176	Starter
0001109025	S0093	Starter
0001109026	S3002	Starter
0001109029	S0209	Starter
0001109030	S0195	Starter
0001109031	S0156	Starter
0001109034	S0020	Starter
0001109035	S0188	Starter
0001109036	S3040	Starter
0001109040	S0106	Starter
0001109041	S0154	Starter
0001109043	S0211	Starter
0001109045	S0230	Starter
0001109048	S0246	Starter
0001109052	S0036	Starter
0001109055	S0036	Starter
0001109057	S0215	Starter
0001109062	S0036	Starter
0001109064	S0175	Starter
0001109065	S0175	Starter
0001109066	S0176	Starter
0001109067	S0176	Starter
0001109068	S0036	Starter
0001109200	S0093	Starter
0001109201	S0093	Starter
0001109205	S0123	Starter
0001109250	S0026	Starter
0001109252	S0155	Starter
0001109253	S0230	Starter
0001109258	S0177	Starter
0001109259	S0177	Starter
0001109260	S0191	Starter
0001109261	S0191	Starter
0001109262	S0210	Starter
0001109263	S0210	Starter
0001109264	S0155	Starter
0001109267	S0189	Starter
0001109268	S0230	Starter
0001109269	S0230	Starter
0001109270	S0230	Starter
0001109300	S0139	Starter
0001109301	S0139	Starter
0001109302	S0159	Starter
0001109303	S0159	Starter
0001109304	S0123	Starter
0001109305	S0123	Starter
0001109306	S0099	Starter
0001109307	S0099	Starter
0001109310	S0155	Starter
0001109311	S0155	Starter
0001109324	S0123	Starter
0001109325	S0123	Starter
0001109328	S0123	Starter
0001109329	S0123	Starter
0001109371	S0099	Starter
0001110001	S0045	Starter
0001110002	S0045	Starter
0001110003	S3001	Starter
0001110007	S0038	Starter
0001110008	S0038	Starter
0001110009	S0014	Starter
0001110010	S0014	Starter
0001110012	S0217	Starter
0001110013	S0069	Starter
0001110014	S0045	Starter
0001110015	S0045	Starter
0001110016	S0029	Starter
0001110017	S0084	Starter
0001110018	S0209	Starter
0001110019	S0069	Starter
0001110022	S3066	Starter
0001110026	S3001	Starter
0001110033	S0209	Starter
0001110036	S0026	Starter
0001110039	S0051	Starter
0001110043	S0069	Starter
0001110053	S0051	Starter
0001110055	S0217	Starter
0001110056	S0084	Starter
0001110064	S0069	Starter
0001110066	S0039	Starter
0001110067	S0039	Starter
0001110069	S0146	Starter
0001110070	S0146	Starter
0001110075	S0029	Starter
0001110086	S0146	Starter
0001110087	S0146	Starter
0001110088	S0069	Starter
0001110089	S3001	Starter
0001110090	S0106	Starter
0001110091	S0029	Starter
0001110092	S0105	Starter
0001110095	S3001	Starter
0001110100	S0233	Starter
0001110101	S0233	Starter
0001110102	S0105	Starter
0001110104	S0069	Starter
0001110105	S0069	Starter
0001110106	S0039	Starter
0001110107	S0039	Starter
0001110108	S0039	Starter
0001110112	S0029	Starter
0001110113	S0051	Starter
0001110114	S3001	Starter
0001110115	S0217	Starter
0001110118	S0146	Starter
0001110119	S0146	Starter
0001110120	S0106	Starter
0001110122	S0039	Starter
0001110123	S0039	Starter
0001110124	S0105	Starter
0001110126	S0039	Starter
0001110127	S0039	Starter
0001110128	S0039	Starter
0001110129	S0039	Starter
0001110132	S0020	Starter
0001110133	S0045	Starter
0001110134	S0045	Starter
0001110136	S0039	Starter
0001110137	S0039	Starter
0001110138	S0039	Starter
0001110139	S0039	Starter
0001112003	S0072	Starter
0001112004	S0072	Starter
0001112007	S3005	Starter
0001112008	S1013	Starter
0001112010	S0190R	Starter
0001112011	S0190R	Starter
0001112012	S0247	Starter
0001112016	S0247	Starter
0001112019	S3010	Starter
0001112027	S4016	Starter
0001112028	S4016	Starter
0001112029	S3010	Starter
0001112032	S5016	Starter
0001112033	S0247	Starter
0001112035	S1014	Starter
0001112037	S0247	Starter
0001112038	S0062	Starter
0001112039	S0062	Starter
0001112041	S3010	Starter
0001112044	S4016	Starter
0001112045	S4016	Starter
0001113003	S0247	Starter
0001113005	S0247	Starter
0001113006	S4022	Starter
0001113009	S0247	Starter
0001113011	S0062	Starter
0001113013	S4016	Starter
0001113014	S4016	Starter
0001114005	S0072	Starter
0001114006	S0072	Starter
0001114009	S0190R	Starter
0001114010	S0190R	Starter
0001114014	S0247	Starter
0001114020	S0247	Starter
0001115015	S0231	Starter
0001115020	S0231	Starter
0001115021	S0195	Starter
0001115025	S0195	Starter
0001115040	S0228	Starter
0001115041	S0228	Starter
0001115045	S0228	Starter
0001115046	S0228	Starter
0001115047	S0218	Starter
0001115048	S0218	Starter
0001115074	S0218	Starter
0001115075	S0218	Starter
0001116001	S3007	Starter
0001116003	S3019	Starter
0001116005	S4022	Starter

BOSCH	AS	PRODUCT
0001116006	S3036	Starter
0001116008	S3022	Starter
0001116009	S3051	Starter
0001117008	S0045	Starter
0001120406	S3044	Starter
0001120407	S3044	Starter
0001120408	S3043	Starter
0001120409	S3043	Starter
0001121006	S0027	Starter
0001121007	S0027	Starter
0001121008	S0048	Starter
0001121009	S0048	Starter
0001121016	S0032	Starter
0001121017	S0032	Starter
0001121018	S0048	Starter
0001121019	S0048	Starter
0001121022	S0119	Starter
0001121023	S0119	Starter
0001121024	S0048	Starter
0001121025	S0048	Starter
0001121026	S0048	Starter
0001121027	S0048	Starter
0001121028	S0027	Starter
0001121029	S0027	Starter
0001121402	S3037	Starter
0001121403	S3037	Starter
0001121408	S3055	Starter
0001121409	S3055	Starter
0001122402	S0120	Starter
0001122403	S0120	Starter
0001123012	S0090	Starter
0001123013	S0090	Starter
0001123014	S0243	Starter
0001123015	S0243	Starter
0001123018	S0140	Starter
0001123019	S0140	Starter
0001123020	S0229	Starter
0001123021	S0229	Starter
0001123038	S0243	Starter
0001123039	S0243	Starter
0001124001	S0025	Starter
0001124002	S0025	Starter
0001124003	S0006	Starter
0001124004	S0006	Starter
0001124005	S0005	Starter
0001124006	S0005	Starter
0001124007	S0094	Starter
0001124008	S0094	Starter
0001124011	S0094	Starter
0001124012	S0094	Starter
0001124013	S0125	Starter
0001124014	S0125	Starter
0001124018	S0095	Starter
0001124019	S0095	Starter
0001124020	S0234	Starter
0001124021	S0234	Starter
0001124022	S0094	Starter
0001124023	S0094	Starter
0001124024	S0094	Starter
0001124025	S0094	Starter
0001124026	S0094	Starter
0001124027	S0094	Starter
0001125001	S0005	Starter
0001125002	S0005	Starter
0001125005	S0006	Starter
0001125006	S0006	Starter
0001125007	S0025	Starter
0001125008	S0025	Starter
0001125009	S0146	Starter
0001125010	S0146	Starter
0001125011	S0005	Starter
0001125012	S0025	Starter
0001125013	S0025	Starter
0001125016	S0212	Starter
0001125017	S0212	Starter
0001125018	S0248	Starter
0001125019	S0248	Starter
0001125021	S0224	Starter
0001125022	S0224	Starter
0001125031	S0005	Starter
0001125032	S3026	Starter
0001125039	S0146	Starter
0001125040	S0146	Starter
0001125042	S0025	Starter
0001125043	S0025	Starter
0001125046	S0212	Starter
0001125047	S0212	Starter
0001125048	S0248	Starter
0001125049	S0248	Starter
0001125051	S0224	Starter
0001125052	S0224	Starter
0001125055	S0193	Starter
0001125056	S0193	Starter
0001125501	S0049	Starter
0001125502	S0049	Starter
0001125503	S0169	Starter
0001125504	S0169	Starter
0001125507	S0192	Starter
0001125508	S0192	Starter
0001125511	S0049	Starter
0001125512	S0049	Starter
0001125513	S0169	Starter
0001125514	S0169	Starter
0001125517	S0192	Starter
0001125518	S0192	Starter
0001125519	S0213	Starter
0001125520	S0213	Starter
0001125605	S0214	Starter
0001125606	S0214	Starter
0001126016	S0207	Starter
0001137001	S0237	Starter
0001137002	S0237	Starter
0001157024	S1013	Starter
0001157028	S1013	Starter
0001157030	S1013	Starter
0001208218	S0128	Starter
0001208416	S0072	Starter
0001208417	S0072	Starter
0001208418	S0072	Starter
0001208419	S0072	Starter
0001208425	S0077	Starter
0001208426	S0077	Starter
0001208428	S0077	Starter
0001208429	S0077	Starter
0001208515	S3015	Starter
0001208516	S0004	Starter
0001208517	S3015	Starter
0001208526	S3015	Starter
0001208528	S3015	Starter
0001208707	S0004	Starter
0001208709	S0050	Starter
0001208710	S0050	Starter
0001208711	S0050	Starter
0001208712	S0050	Starter
0001208713	S0050	Starter
0001208714	S0050	Starter
0001208717	S3015	Starter
0001211012	S0046	Starter
0001211013	S0046	Starter
0001211014	S0046	Starter
0001211241	S9057	Starter
0001211251	S0077	Starter
0001211252	S0077	Starter
0001211253	S0077	Starter
0001211254	S0077	Starter
0001211257	S0072	Starter
0001211258	S0072	Starter
0001211504	S0050	Starter
0001211505	S0050	Starter
0001211536	S4039	Starter
0001211992	S0046	Starter
0001211993	S0046	Starter
0001211997	S0046	Starter
0001211998	S0046	Starter
0001218002	S0183	Starter
0001218003	S0236	Starter
0001218004	S0043	Starter
0001218005	S0043	Starter
0001218006	S0016	Starter
0001218007	S0205	Starter
0001218008	S0204	Starter
0001218010	S0133	Starter
0001218012	S0047	Starter
0001218013	S0047	Starter
0001218014	S0132	Starter
0001218016	S0144	Starter
0001218017	S0043	Starter
0001218018	S0047	Starter
0001218019	S0127	Starter
0001218020	S0236	Starter
0001218021	S0016	Starter
0001218023	S0166	Starter
0001218024	S0148	Starter
0001218101	S0127	Starter
0001218102	S0132	Starter
0001218103	S0148	Starter
0001218105	S0161	Starter
0001218108	S0016	Starter
0001218110	S0144	Starter
0001218111	S0043	Starter
0001218112	S0043	Starter
0001218113	S0047	Starter
0001218114	S0047	Starter
0001218115	S0047	Starter
0001218116	S0142	Starter
0001218117	S0142	Starter

BOSCH	AS	PRODUCT
0001218121	S0133	Starter
0001218125	S0166	Starter
0001218126	S0205	Starter
0001218128	S0161	Starter
0001218130	S0043	Starter
0001218131	S0204	Starter
0001218145	S0204	Starter
0001218150	S0016	Starter
0001218152	S0042	Starter
0001218154	S0132	Starter
0001218155	S0133	Starter
0001218156	S0143	Starter
0001218157	S0017	Starter
0001218158	S0166	Starter
0001218159	S0064	Starter
0001218162	S0143	Starter
0001218163	S0127	Starter
0001218165	S0016	Starter
0001218167	S0127	Starter
0001218168	S0042	Starter
0001218172	S0066	Starter
0001218174	S0018	Starter
0001218175	S0166	Starter
0001218177	S0206	Starter
0001218620	S0236	Starter
0001218703	S0148	Starter
0001218715	S0047	Starter
0001218725	S0166	Starter
0001218728	S0161	Starter
0001218757	S0017	Starter
0001218758	S0166	Starter
0001218768	S0042	Starter
0001218772	S0066	Starter
0001218774	S0018	Starter
0001218818	S0165	Starter
0001218822	S0153	Starter
0001223001	S0017	Starter
0001223002	S0066	Starter
0001223003	S0099	Starter
0001223005	S0091	Starter
0001223006	S0203	Starter
0001223007	S0099	Starter
0001223013	S0089	Starter
0001223014	S0163	Starter
0001223016	S0101	Starter
0001223021	S0101	Starter
0001223024	S0099	Starter
0001223504	S0152	Starter
0001223506	S0164	Starter
0001230001	S0149	Starter
0001230006	S0129	Starter
0001230007	S0081	Starter
0001230009	S0110	Starter
0001230010	S0081	Starter
0001230012	S0113	Starter
0001230014	S0129	Starter
0001230023	S0081	Starter
0001231002	S0037	Starter
0001231003	S0070	Starter
0001231004	S0108	Starter
0001231005	S0079	Starter
0001231006	S0130	Starter
0001231007	S0078	Starter
0001231008	S0085	Starter
0001231009	S0075	Starter
0001231011	S0080	Starter
0001231012	S0235	Starter
0001231013	S0160	Starter
0001231014	S0107	Starter
0001231016	S0082	Starter
0001231017	S0178	Starter
0001231018	S0182	Starter
0001231019	S0078	Starter
0001231023	S0180	Starter
0001231026	S0179	Starter
0001231028	S0079	Starter
0001231029	S0085	Starter
0001231030	S0078	Starter
0001231032	S0037	Starter
0001231033	S0037	Starter
0001231034	S0180	Starter
0001231035	S0181	Starter
0001231036	S0184	Starter
0001231040	S0184	Starter
0001231041	S0160	Starter
0001231502	S0202	Starter
0001241001	S0138	Starter
0001241003	S0137	Starter
0001241005	S0147	Starter
0001241006	S0194	Starter
0001241007	S0137	Starter
0001241008	S0086	Starter
0001241009	S0147	Starter
0001241014	S0137	Starter
0001241015	S0194	Starter
0001241019	S0137	Starter
0001241020	S0194	Starter
0001241021	S0147	Starter
0001261008	S0194	Starter
0001261014	S0199	Starter
0001262030	S0200	Starter
0001263019	S0201	Starter
0001314011	S9052	Starter
0001330007	S0172	Starter
0001330008	S0173	Starter
0001354010	S9052	Starter
0001354073	S9046	Starter
0001354080	S9046	Starter
0001354090	S9052	Starter
0001358020	S0114	Starter
0001358033	S9044	Starter
0001358041	S0112	Starter
0001358046	S0115	Starter
0001358049	S0115	Starter
0001358051	S0114	Starter
0001358200	S4007	Starter
0001358201	S4007	Starter
0001358202	S4007	Starter
0001359012	S0115	Starter
0001359014	S9046	Starter
0001359016	S0117	Starter
0001359020	S0198	Starter
0001359021	S0116	Starter
0001359025	S9043	Starter
0001359027	S0115	Starter
0001359038	S0113	Starter
0001359043	S0067	Starter
0001359046	S0115	Starter
0001359049	S0115	Starter
0001359071	S9054	Starter
0001359072	S9043	Starter
0001359073	S0115	Starter
0001359074	S9046	Starter
0001359078	S0115	Starter
0001359083	S0113	Starter
0001359084	S0067	Starter
0001359088	S0198	Starter
0001359090	S0117	Starter
0001359091	S0116	Starter
0001359102	S0116	Starter
0001359104	S4004	Starter
0001359108	S0114	Starter
0001359117	S0198	Starter
0001359118	S9054	Starter
0001359122	S0110	Starter
0001359124	S9024	Starter
0001360010	S0197	Starter
0001360012	S0068	Starter
0001360014	S0068	Starter
0001360015	S0118	Starter
0001360022	S0002	Starter
0001360026	S0235	Starter
0001360035	S0068	Starter
0001360037	S0002	Starter
0001360038	S0197	Starter
0001360043	S0118	Starter
0001360050	S0075	Starter
0001360052	S0002	Starter
0001360058	S0235	Starter
0001360061	S0107	Starter
0001360063	S0092	Starter
0001360065	S0002	Starter
0001362003	S0219(BOSCH)R	Starter
0001362004	S0219(BOSCH)R	Starter
0001362008	S4018	Starter
0001362012	S0112	Starter
0001362016	S0115	Starter
0001362022	S9052	Starter
0001362025	S9043	Starter
0001362027	S0219(BOSCH)R	Starter
0001362028	S0219(BOSCH)R	Starter
0001362032	S0152	Starter
0001362034	S0115	Starter
0001362035	S9052	Starter
0001362038	S0219(BOSCH)R	Starter
0001362039	S0152	Starter
0001362043	S9043	Starter
0001362060	S4014	Starter
0001362062	S4037(MM)R	Starter
0001362063	S9046	Starter
0001362067	S4004	Starter
0001362073	S4036(MM)R	Starter
0001362084	S9037	Starter
0001362091	S9044	Starter
0001362102	S0111	Starter
0001362105	S0152	Starter

BOSCH	AS	PRODUCT
0001362300	S9046	Starter
0001362305	S0115	Starter
0001362306	S9043	Starter
0001362307	S4007	Starter
0001362311	S9044	Starter
0001362312	S0112	Starter
0001362313	S0115	Starter
0001362314	S9043	Starter
0001362316	S0112	Starter
0001363101	S4021	Starter
0001363111	S4021	Starter
0001364001	S9066	Starter
0001364100	S0145	Starter
0001364301	S0145	Starter
0001367001	S9046	Starter
0001367004	S0115	Starter
0001367005	S0113	Starter
0001367006	S4004	Starter
0001367013	S0114	Starter
0001367014	S0116	Starter
0001367017	S0198	Starter
0001367023	S9055	Starter
0001367026	S9054	Starter
0001367028	S0116	Starter
0001367029	S0110	Starter
0001367030	S9054	Starter
0001367032	S4010	Starter
0001367034	S0067	Starter
0001367037	S9056	Starter
0001367040	S9021	Starter
0001367045	S0067	Starter
0001367048	S0198	Starter
0001367056	S4008	Starter
0001367059	S0067	Starter
0001367069	S4013	Starter
0001367073	S9054	Starter
0001367075	S0117	Starter
0001367076	S0198	Starter
0001367078	S0117	Starter
0001367082	S9055	Starter
0001367300	S0067	Starter
0001367301	S0067	Starter
0001367303	S0067	Starter
0001368001	S0068	Starter
0001368007	S0068	Starter
0001368010	S0197	Starter
0001368016	S0041	Starter
0001368017	S0107	Starter
0001368019	S0118	Starter
0001368020	S0092	Starter
0001368024	S0002	Starter
0001368034	S0235	Starter
0001368055	S0002	Starter
0001368056	S0040	Starter
0001368059	S1019	Starter
0001368062	S0002	Starter
0001368063	S0107	Starter
0001368070	S0075	Starter
0001368074	S0107	Starter
0001368081	S0041	Starter
0001368083	S0196	Starter
0001368085	S0170	Starter
0001368088	S0068	Starter
0001368300	S0002	Starter
0001368301	S0197	Starter
0001368304	S0075	Starter
0001368305	S0040	Starter
0001368306	S0075	Starter
0001368307	S0002	Starter
0001368309	S0002	Starter
0001368310	S0040	Starter
0001368313	S0160	Starter
0001368316	S0197	Starter
0001368317	S0040	Starter
0001369001	S0117	Starter
0001369005	S0117	Starter
0001369014	S0174	Starter
0001369016	S9046	Starter
0001369017	S9043	Starter
0001369022	S9056	Starter
0001369024	S0174	Starter
0001371004	S0097	Starter
0001371006	S0024	Starter
0001371007	S0024	Starter
0001371008	S0109	Starter
0001372001	S0019	Starter
0001372002	S0076	Starter
0001372003	S0076	Starter
0001372005	S0071	Starter
0001372006	S0074	Starter
0001372007	S0076	Starter
0001372008	S0076	Starter
0001402055	S0151	Starter
0001402059	S0151	Starter
0001402081	S0151	Starter
0001402083	S0151	Starter
0001410024	S0003	Starter
0001410044	S0007	Starter
0001410050	S0009	Starter
0001410088	S0003	Starter
0001410094	S0134	Starter
0001410098	S0220(BOSCH)R	Starter
0001410111	S0011	Starter
0001410115	S0220(BOSCH)R	Starter
0001411005	S0220(BOSCH)R	Starter
0001411009	S0003	Starter
0001411010	S0009	Starter
0001411013	S0061	Starter
0001411016	S0216	Starter
0001411017	S0008	Starter
0001411021	S0220(BOSCH)R	Starter
0001411026	S0008	Starter
0001411036	S0245	Starter
0001414003	S0151	Starter
0001414010	S0151	Starter
0001415002	S0151	Starter
0001415007	S0134	Starter
0001415016	S0216	Starter
0001415017	S0221(BOSCH)R	Starter
0001416002	S0001	Starter
0001416004	S0134	Starter
0001416005	S0063	Starter
0001416009	S0216	Starter
0001416011	S0221(BOSCH)R	Starter
0001416022	S0151	Starter
0001416024	S0151	Starter
0001416034	S0222(BOSCH)R	Starter
0001416036	S0011	Starter
0001416047	S0151	Starter
0001416052	S0221(BOSCH)R	Starter
0001416053	S0009	Starter
0001416054	S0151	Starter
0001416062	S0023	Starter
0001416067	S0023	Starter
0001416070	S0063	Starter
0001416076	S0216	Starter
0001416078	S0001	Starter
0001416079	S0001	Starter
0001417001	S0003	Starter
0001417006	S0008	Starter
0001417007	S0220(BOSCH)R	Starter
0001417023	S0009	Starter
0001417026	S0060	Starter
0001417035	S0063	Starter
0001417037	S0003	Starter
0001417038	S0003	Starter
0001417042	S0065	Starter
0001417043	S0010	Starter
0001417045	S0220(BOSCH)R	Starter
0001417047	S0061	Starter
0001417051	S0003	Starter
0001417053	S0022	Starter
0001417061	S0022	Starter
0001417064	S0012	Starter
0001417065	S0021	Starter
0001417068	S0022	Starter
0001417074	S0008	Starter
0001417075	S0135	Starter
0001420002	S1009	Starter
0001420003	S1006	Starter
0001420004	S1006	Starter
0001420006	S1009	Starter
0001420008	S1009	Starter
0001420009	S1006	Starter
0001420010	S1009	Starter
0001420011	S1009	Starter
0001420013	S1006	Starter
0001510014	S0162	Starter
0001510017	S0162	Starter
0001510025	S0167	Starter
0001510169	S0167	Starter
0001547625	AS0018	Stator
0120300562	A0013	Alternator
0120335007	A3020	Alternator
0120335012	A3015	Alternator
0120339512	A0013	Alternator
0120339513	A0013	Alternator
0120339514	A0004	Alternator
0120339515	A0012	Alternator
0120339516	A0012	Alternator
0120339521	A4009	Alternator
0120339527	A0012	Alternator
0120339528	A0012	Alternator
0120339531	A0004	Alternator
0120339536	A4009	Alternator
0120339543	A0013	Alternator

BOSCH	AS	PRODUCT
0120339544	A0013	Alternator
0120339545	A0013	Alternator
0120400640	A0184	Alternator
0120400642	A0184	Alternator
0120400694	A0184	Alternator
0120400728	A0016	Alternator
0120400773	A0001	Alternator
0120400791	A0184	Alternator
0120400858	A0069	Alternator
0120400859	A0069	Alternator
0120465020	A0048	Alternator
0120465021	A0119	Alternator
0120465031	A0156	Alternator
0120468017	A0111	Alternator
0120468019	A0111	Alternator
0120468020	A0111	Alternator
0120468022	A0111	Alternator
0120468023	A0111	Alternator
0120468024	A0111	Alternator
0120468028	A0112	Alternator
0120468037	A0010	Alternator
0120468044	A0111	Alternator
0120468052	A0111	Alternator
0120468053	A0002	Alternator
0120468055	A0112	Alternator
0120468065	A0025	Alternator
0120468070	A0111	Alternator
0120468079	A0111	Alternator
0120468093	A0008	Alternator
0120468094	A0025	Alternator
0120468107	A0002	Alternator
0120468108	A0111	Alternator
0120468109	A0111	Alternator
0120468112	A0111	Alternator
0120468113	A0002	Alternator
0120468114	A0010	Alternator
0120468116	A0025	Alternator
0120468117	A0002	Alternator
0120468118	A0002	Alternator
0120468123	A0111	Alternator
0120468124	A0025	Alternator
0120468129	A0025	Alternator
0120468130	A0025	Alternator
0120468131	A0029	Alternator
0120468135	A0008	Alternator
0120468137	A0002	Alternator
0120468141	A0111	Alternator
0120468143	A0011	Alternator
0120468144	A0008	Alternator
0120468145	A0011	Alternator
0120469001	A0001	Alternator
0120469002	A0096	Alternator
0120469003	A0095	Alternator
0120469008	A0203	Alternator
0120469009	A0110	Alternator
0120469010	A0023	Alternator
0120469011	A0095	Alternator
0120469012	A0095	Alternator
0120469013	A0109	Alternator
0120469014	A0108	Alternator
0120469018	A3059	Alternator
0120469019	A0001	Alternator
0120469021	A0106	Alternator
0120469022	A0023	Alternator
0120469023	A0023	Alternator
0120469025	A0001	Alternator
0120469026	A0023	Alternator
0120469030	A0203	Alternator
0120469033	A3059	Alternator
0120469039	A0001	Alternator
0120469044	A3059	Alternator
0120469048	A0023	Alternator
0120469101	A0001	Alternator
0120469102	A0203	Alternator
0120469103	A0001	Alternator
0120469108	A0023	Alternator
0120469110	A0023	Alternator
0120469113	A0023	Alternator
0120469115	A0007	Alternator
0120469116	A0007	Alternator
0120469507	A0055	Alternator
0120469509	A0001	Alternator
0120469514	A0103	Alternator
0120469515	A0103	Alternator
0120469518	A0001	Alternator
0120469519	A0203	Alternator
0120469520	A0203	Alternator
0120469521	A0203	Alternator
0120469522	A0055	Alternator
0120469523	A0009	Alternator
0120469526	A0109	Alternator
0120469527	A0087	Alternator
0120469534	A0103	Alternator
0120469535	A0103	Alternator
0120469548	A0103	Alternator
0120469555	A0103	Alternator
0120469556	A0103	Alternator
0120469557	A0103	Alternator
0120469558	A0103	Alternator
0120469562	A0087	Alternator
0120469569	A0058	Alternator
0120469579	A0101	Alternator
0120469580	A0101	Alternator
0120469581	A0094	Alternator
0120469582	A0094	Alternator
0120469585	A0203	Alternator
0120469592	A0087	Alternator
0120469600	A0094	Alternator
0120469601	A0093	Alternator
0120469602	A0093	Alternator
0120469603	A0093	Alternator
0120469604	A0094	Alternator
0120469631	A0094	Alternator
0120469632	A0094	Alternator
0120469633	A0094	Alternator
0120469635	A0094	Alternator
0120469636	A0094	Alternator
0120469637	A0094	Alternator
0120469638	A0094	Alternator
0120469641	A0107	Alternator
0120469643	A0058	Alternator
0120469646	A0107	Alternator
0120469647	A0107	Alternator
0120469661	A0110	Alternator
0120469662	A0110	Alternator
0120469666	A0107	Alternator
0120469667	A0107	Alternator
0120469676	A0110	Alternator
0120469677	A0110	Alternator
0120469686	A0001	Alternator
0120469687	A0109	Alternator
0120469693	A0058	Alternator
0120469696	A0094	Alternator
0120469697	A0094	Alternator
0120469698	A0094	Alternator
0120469699	A0094	Alternator
0120469700	A0094	Alternator
0120469701	A0094	Alternator
0120469702	A0094	Alternator
0120469710	A0107	Alternator
0120469721	A0103	Alternator
0120469722	A0106	Alternator
0120469723	A0106	Alternator
0120469727	A0094	Alternator
0120469728	A0094	Alternator
0120469729	A0094	Alternator
0120469730	A0094	Alternator
0120469731	A0094	Alternator
0120469732	A0094	Alternator
0120469733	A0094	Alternator
0120469734	A0093	Alternator
0120469735	A0093	Alternator
0120469736	A0093	Alternator
0120469737	A0093	Alternator
0120469738	A0093	Alternator
0120469739	A0093	Alternator
0120469744	A0015	Alternator
0120469745	A0015	Alternator
0120469746	A0015	Alternator
0120469749	A0055	Alternator
0120469752	A0101	Alternator
0120469753	A0101	Alternator
0120469761	A0087	Alternator
0120469763	A0058	Alternator
0120469768	A0093	Alternator
0120469772	A0203	Alternator
0120469777	A0070	Alternator
0120469778	A0070	Alternator
0120469779	A0070	Alternator
0120469784	A0104	Alternator
0120469785	A0104	Alternator
0120469786	A0104	Alternator
0120469787	A0104	Alternator
0120469793	A0104	Alternator
0120469796	A0001	Alternator
0120469798	A0108	Alternator
0120469807	A0058	Alternator
0120469808	A0110	Alternator
0120469811	A0015	Alternator
0120469813	A0106	Alternator
0120469836	A0107	Alternator
0120469862	A0094	Alternator
0120469863	A0093	Alternator
0120469885	A0094	Alternator
0120469886	A0094	Alternator
0120469891	A0087	Alternator

BOSCH	AS	PRODUCT
0120469896	A0015	Alternator
0120469897	A0015	Alternator
0120469900	A0058	Alternator
0120469920	A0026	Alternator
0120469929	A0106	Alternator
0120469930	A0106	Alternator
0120469931	A0105	Alternator
0120469932	A0105	Alternator
0120469933	A0105	Alternator
0120469934	A0105	Alternator
0120469946	A0015	Alternator
0120469947	A0015	Alternator
0120469958	A0110	Alternator
0120469959	A0058	Alternator
0120469967	A3062	Alternator
0120469971	A0096	Alternator
0120469972	A0096	Alternator
0120469978	A0023	Alternator
0120469982	A0001	Alternator
0120469983	A0087	Alternator
0120469999	A0023	Alternator
0120484009	A0212	Alternator
0120484011	A0082	Alternator
0120484012	A0089	Alternator
0120484015	A0135	Alternator
0120484017	A0089	Alternator
0120484018	A0082	Alternator
0120484019	A0089	Alternator
0120484021	A0135	Alternator
0120484024	A0085	Alternator
0120484026	A0082	Alternator
0120484027	A0089	Alternator
0120485018	A3064	Alternator
0120485020	A0078	Alternator
0120485023	A0078	Alternator
0120485029	A0152	Alternator
0120485034	A0202	Alternator
0120485036	A0006	Alternator
0120485038	A0077	Alternator
0120485043	A0131	Alternator
0120485048	A3062	Alternator
0120485050	A0155	Alternator
0120488022	A0014	Alternator
0120488118	A0179	Alternator
0120488119	A0179	Alternator
0120488142	A3004	Alternator
0120488153	A0088	Alternator
0120488158	A0134	Alternator
0120488159	A0134	Alternator
0120488168	A0115	Alternator
0120488176	A4011	Alternator
0120488182	A4011	Alternator
0120488186	A0115	Alternator
0120488187	A0115	Alternator
0120488189	A4067	Alternator
0120488202	A0115	Alternator
0120488205	A0018	Alternator
0120488206	A0185	Alternator
0120488211	A4012	Alternator
0120488224	A0030	Alternator
0120488234	A0088	Alternator
0120488241	A0092	Alternator
0120488254	A4065	Alternator
0120488256	A0016	Alternator
0120488277	A0016	Alternator
0120488278	A0016	Alternator
0120488282	A0020	Alternator
0120488283	A0088	Alternator
0120488284	A4030	Alternator
0120488291	A0016	Alternator
0120488293	A0018	Alternator
0120488294	A0185	Alternator
0120489022	A0014	Alternator
0120489023	A0030	Alternator
0120489032	A0020	Alternator
0120489060	A0099	Alternator
0120489061	A0069	Alternator
0120489090	A4011	Alternator
0120489093	A4011	Alternator
0120489107	A4039	Alternator
0120489136	A4065	Alternator
0120489138	A0134	Alternator
0120489139	A0134	Alternator
0120489146	A4039	Alternator
0120489147	A4039	Alternator
0120489185	A0028	Alternator
0120489187	A4059	Alternator
0120489188	A4059	Alternator
0120489193	A3013	Alternator
0120489194	A3013	Alternator
0120489197	A0091	Alternator
0120489221	A0017	Alternator
0120489225	A0017	Alternator
0120489231	A0017	Alternator
0120489251	A4067	Alternator
0120489262	A0141	Alternator
0120489272	A4065	Alternator
0120489273	A4065	Alternator
0120489284	A0017	Alternator
0120489290	A4011	Alternator
0120489303	A0100	Alternator
0120489307	A4065	Alternator
0120489315	A0020	Alternator
0120489316	A0097	Alternator
0120489318	A4065	Alternator
0120489319	A4065	Alternator
0120489321	A0031	Alternator
0120489322	A0031	Alternator
0120489325	A0031	Alternator
0120489326	A0031	Alternator
0120489327	A0031	Alternator
0120489328	A0031	Alternator
0120489329	A0031	Alternator
0120489330	A0031	Alternator
0120489336	A4030	Alternator
0120489337	A4030	Alternator
0120489339	A0134	Alternator
0120489340	A0134	Alternator
0120489345	A4011	Alternator
0120489346	A4012	Alternator
0120489347	A4012	Alternator
0120489364	A0028	Alternator
0120489365	A0028	Alternator
0120489371	A0090	Alternator
0120489386	A0091	Alternator
0120489408	A4012	Alternator
0120489410	A4029	Alternator
0120489412	A4029	Alternator
0120489414	A4029	Alternator
0120489432	A0086	Alternator
0120489433	A0086	Alternator
0120489434	A0141	Alternator
0120489435	A0141	Alternator
0120489441	A0090	Alternator
0120489445	A0028	Alternator
0120489446	A0092	Alternator
0120489447	A0092	Alternator
0120489448	A0090	Alternator
0120489475	A0018	Alternator
0120489481	A0185	Alternator
0120489490	A3004	Alternator
0120489491	A3004	Alternator
0120489495	A0086	Alternator
0120489496	A0086	Alternator
0120489499	A0028	Alternator
0120489518	A0001	Alternator
0120489526	A0069	Alternator
0120489527	A0069	Alternator
0120489556	A0069	Alternator
0120489612	A4029	Alternator
0120489639	A4029	Alternator
0120489643	A0099	Alternator
0120489683	A0069	Alternator
0120489707	A0030	Alternator
0120489710	A0014	Alternator
0120489725	A0020	Alternator
0120489726	A0020	Alternator
0120489727	A0017	Alternator
0120489728	A0017	Alternator
0120489730	A0030	Alternator
0120489731	A0102	Alternator
0120489756	A0084	Alternator
0120489757	A0020	Alternator
0120489763	A4039	Alternator
0120489770	A4039	Alternator
0120489792	A4029	Alternator
0120489793	A4029	Alternator
0120489795	A4029	Alternator
0120489796	A4029	Alternator
0120489823	A4065	Alternator
0120489824	A4065	Alternator
0120489828	A0069	Alternator
0120489838	A4039	Alternator
0120489917	A0069	Alternator
0120489918	A0069	Alternator
0120489933	A0069	Alternator
0120489966	A0098	Alternator
0120489967	A0098	Alternator
0120489984	A4012	Alternator
0120510052	A1012	Alternator
0120689516	A0024	Alternator
0120689524	A0024	Alternator
0120689530	A0021	Alternator
0120689535	A0021	Alternator
0120689538	A0024	Alternator
0120689539	A0024	Alternator

BOSCH	AS	PRODUCT
0120689541	A0022	Alternator
0120689550	A0024	Alternator
0120689569	A0022	Alternator
0120689571	A0021	Alternator
0120689575	A0022	Alternator
0121615002	A0200	Alternator
0121615013	A0170	Alternator
0121715001	A0204	Alternator
0121813006	A0214R	Alternator
0121C00401	AFP0068	FW pulley
01220AA000	A0205R	Alternator
01220AA0B0	A0205R	Alternator
01220AA0D0	A0205R	Alternator
01220AA0R0	A0205R	Alternator
01220AA1A0	A0205R	Alternator
01220AA1J0	A0226	Starter
01220AA1P0	A0205R	Alternator
01220AA2A0	A0205R	Alternator
01221AA6K0	AFP0042	FW pulley
01221AA7V0	AFP0015	FW pulley
01221AA8F0	AFP0042	FW pulley
0122468015	A0226	Starter
01229AA0X0	ARE0044	Regulator
0123110004	A3016	Alternator
0123310001	A0131	Alternator
0123310002	A0202	Alternator
0123310010	A0163	Alternator
0123310011	A0081	Alternator
0123310014	A0152	Alternator
0123310015	A0148	Alternator
0123310019	A0131	Alternator
0123310020	A0202	Alternator
0123310023	A0197	Alternator
0123310024	A0131	Alternator
0123310025	A0131	Alternator
0123310029	A0153	Alternator
0123310031	A0041	Alternator
0123310032	A0131	Alternator
0123310048	A0198	Alternator
0123310050	A0197	Alternator
0123310053	A0153	Alternator
0123310054	A0197	Alternator
0123310055	A0198	Alternator
0123315001	A0202	Alternator
0123315002	A0131	Alternator
0123315007	A5026	Alternator
0123315013	A0157	Alternator
0123315014	A0158	Alternator
0123315020	A5026	Alternator
0123315500	A0033	Alternator
0123315501	A0114	Alternator
0123315502	A0033	Alternator
0123315503	A0033	Alternator
0123320001	A0077	Alternator
0123320002	A0006	Alternator
0123320003	A0078	Alternator
0123320006	A0006	Alternator
0123320007	A0077	Alternator
0123320008	A0129	Alternator
0123320009	A0041	Alternator
0123320010	A0114	Alternator
0123320011	A0113	Alternator
0123320012	A0161	Alternator
0123320016	A3081	Alternator
0123320017	A0077	Alternator
0123320018	A0019	Alternator
0123320019	A0079	Alternator
0123320024	A0129	Alternator
0123320025	A0041	Alternator
0123320027	A0080	Alternator
0123320033	A0128	Alternator
0123320034	A0080	Alternator
0123320035	A0187	Alternator
0123320039	A0113	Alternator
0123320044	A0005	Alternator
0123320045	A0114	Alternator
0123320046	A0133	Alternator
0123320048	A0078	Alternator
0123320049	A0133	Alternator
0123320051	A0032	Alternator
0123320052	A3081	Alternator
0123320054	A3081	Alternator
0123320055	A0041	Alternator
0123320058	A0187	Alternator
0123320060	A0172	Alternator
0123320061	A0114	Alternator
0123320065	A0032	Alternator
0123325005	A0130	Alternator
0123325010	A0157	Alternator
0123325011	A0162	Alternator
0123325015	A0162	Alternator
0123325500	A0175	Alternator
0123335002	A0005	Alternator
0123335003	A0114	Alternator
0123335006	A0005	Alternator
0123335008	A0172	Alternator
0123340001	A0078	Alternator
0123340002	A0006	Alternator
0123340003	A0077	Alternator
0123500001	A0003	Alternator
0123500007	A0051	Alternator
0123500520	ARE0053	Regulator
0123505001	A0116	Alternator
0123505002	A1001	Alternator
0123505003	A1012	Alternator
0123505004	A1012	Alternator
0123505005	A0048	Alternator
0123505010	A0119	Alternator
0123505011	A0118	Alternator
0123505012	A0118	Alternator
0123505013	A0118	Alternator
0123510001	A0048	Alternator
0123510002	A0003	Alternator
0123510003	A1012	Alternator
0123510005	A0119	Alternator
0123510006	A0048	Alternator
0123510007	A0117	Alternator
0123510008	A0151	Alternator
0123510009	A0151	Alternator
0123510020	A0051	Alternator
0123510022	A0173	Alternator
0123510023	A0003	Alternator
0123510026	A0186	Alternator
0123510027	A0176	Alternator
0123510032	A0048	Alternator
0123510034	A0048	Alternator
0123510043	A0174	Alternator
0123510050	A0173	Alternator
0123510053	A0117	Alternator
0123510056	A0048	Alternator
0123510062	A1012	Alternator
0123510063	A0116	Alternator
0123510064	A0051	Alternator
0123510068	A0173	Alternator
0123510079	A0173	Alternator
0123510081	A0173	Alternator
0123510082	A0035	Alternator
0123510100	A0173	Alternator
0123510107	A0035	Alternator
0123510108	A0035	Alternator
0123515008	A0178	Alternator
0123515009	A0151	Alternator
0123515011	A0151	Alternator
0123515014	A0118	Alternator
0123515016	A0186	Alternator
0123515018	A0118	Alternator
0123515022	A0071	Alternator
0123515028	A0177	Alternator
0123520017	A0054	Alternator
0123520023	A0169	Alternator
0123525500	A0136	Alternator
0123525501	A0073	Alternator
0123525502	A0136	Alternator
0123525503	A0136	Alternator
012402A2LB	A0027	Alternator
01240AA2LB	A0027	Alternator
0124215002	A4007	Alternator
0124225010	A0057	Alternator
0124225011	A0057	Alternator
0124225016	A4016	Alternator
0124225018	A0225	Alternator
0124225020	A0223	Alternator
0124225037	A0223	Alternator
0124225041	A0225	Alternator
0124225049	A0225	Alternator
0124315004	A0125	Alternator
0124315014	A0158	Alternator
0124315019	A0043	Alternator
0124315027	A0043	Alternator
0124320001	A0149	Alternator
0124325001	A0127	Alternator
0124325003	A0027	Alternator
0124325004	A0040	Alternator
0124325011	A0027	Alternator
0124325013	A0042	Alternator
0124325015	A0188	Alternator
0124325016	A0056	Alternator
0124325017	A0050	Alternator
0124325019	A0050	Alternator
0124325020	A0050	Alternator
0124325021	A0038	Alternator
0124325022	A0038	Alternator
0124325023	A3058	Alternator
0124325024	A0145	Alternator
0124325031	A0145	Alternator
0124325032	A0037	Alternator

BOSCH	AS	PRODUCT
0124325033	A0188	Alternator
0124325035	A0038	Alternator
0124325036	A0050	Alternator
0124325039	A0032	Alternator
0124325044	A0181	Alternator
0124325046	A0032	Alternator
0124325057	A0039	Alternator
0124325058	A0140	Alternator
0124325059	A0191	Alternator
0124325062	A0216	Alternator
0124325072	A0216	Alternator
0124325074	A0037	Alternator
0124325083	A3097	Alternator
0124325085	A0224	Alternator
0124325087	A0220	Alternator
0124325088	A0127	Alternator
0124325093	A0032	Alternator
0124325095	A0181	Alternator
0124325096	A0180	Alternator
0124325097	A0038	Alternator
0124325100	A9021	Alternator
0124325101	A0127	Alternator
0124325106	A0039	Alternator
0124325108	A0159	Alternator
0124325116	A0220	Alternator
0124325122	A0150	Alternator
0124325126	A0039	Alternator
0124325128	A0181	Alternator
0124325129	A0180	Alternator
0124325130	A3097	Alternator
0124325131	A0127	Alternator
0124325137	A0027	Alternator
0124325145	A0140	Alternator
0124325146	A0191	Alternator
0124325149	A0127	Alternator
0124325150	A0042	Alternator
0124325158	A0210	Alternator
0124325185	A0145	Alternator
0124415002	A1011	Alternator
0124415007	A0044	Alternator
0124415008	A1001	Alternator
0124415009	A0121	Alternator
0124415010	A1009	Alternator
0124415011	A0140	Alternator
0124415012	A0191	Alternator
0124415013	A0044	Alternator
0124415014	A0044	Alternator
0124415015	A4023	Alternator
0124415016	A0068	Alternator
0124415025	A0121	Alternator
0124415030	A0068	Alternator
0124415032	A0068	Alternator
0124415038	A0044	Alternator
0124415040	A0044	Alternator
0124415041	A0044	Alternator
0124425004	A0047	Alternator
0124425009	A0066	Alternator
0124425013	A0213	Alternator
0124425019	A0121	Alternator
0124425022	A1011	Alternator
0124425025	A1011	Alternator
0124425027	A0066	Alternator
0124425029	A0213	Alternator
0124425037	A0213	Alternator
0124425041	A0229	Alternator
0124425053	A0047	Alternator
0124425056	A0047	Alternator
0124425058	A0215	Alternator
0124425059	A0215	Alternator
0124425071	A0213	Alternator
0124425100	A4042	Alternator
0124510001	A0228	Alternator
0124515004	A0066	Alternator
0124515005	A0052	Alternator
0124515010	A0059	Alternator
0124515011	A0059	Alternator
0124515012	A0059	Alternator
0124515013	A0036	Alternator
0124515017	A0060	Alternator
0124515018	A0060	Alternator
0124515019	A0061	Alternator
0124515020	A0036	Alternator
0124515021	A0036	Alternator
0124515024	A3054	Alternator
0124515025	A0143	Alternator
0124515026	A0046	Alternator
0124515027	A3054	Alternator
0124515028	A0045	Alternator
0124515031	A0154	Alternator
0124515032	A0171	Alternator
0124515033	A0047	Alternator
0124515034	A3054	Alternator
0124515035	A0189	Alternator
0124515038	A0036	Alternator
0124515040	A0045	Alternator
0124515042	A0065	Alternator
0124515044	A0075	Alternator
0124515046	A0144	Alternator
0124515049	A0219	Alternator
0124515050	A0071	Alternator
0124515054	A0061	Alternator
0124515055	A0206	Alternator
0124515056	A0067	Alternator
0124515057	A0189	Alternator
0124515058	A3108	Alternator
0124515059	A0195	Alternator
0124515064	A0035	Alternator
0124515068	A0036	Alternator
0124515080	A0052	Alternator
0124515081	A0171	Alternator
0124515083	A0046	Alternator
0124515086	A1001	Alternator
0124515091	A0035	Alternator
0124515095	A0047	Alternator
0124515096	A0047	Alternator
0124515098	A0217	Alternator
0124515110	A0059	Alternator
0124515113	A0228	Alternator
0124515114	A0035	Alternator
0124515117	A0059	Alternator
0124515118	A0035	Alternator
0124515120	A0228	Alternator
0124515121	A0059	Alternator
0124515124	A0059	Alternator
0124515125	A0059	Alternator
0124515132	A0067	Alternator
0124525001	A0049	Alternator
0124525002	A0182	Alternator
0124525010	A3033	Alternator
0124525014	A0049	Alternator
0124525016	A0196	Alternator
0124525020	A0147	Alternator
0124525026	A0221	Alternator
0124525028	A0166	Alternator
0124525029	A0049	Alternator
0124525030	A0209	Alternator
0124525034	A3074	Alternator
0124525035	A0142	Alternator
0124525039	A0190	Alternator
0124525040	A0209	Alternator
0124525043	A0164	Alternator
0124525044	A0165	Alternator
0124525047	A0167	Alternator
0124525049	A0164	Alternator
0124525050	A0190	Alternator
0124525056	A0227	Alternator
0124525057	A0227	Alternator
0124525063	A0183	Alternator
0124525066	A0190	Alternator
0124525067	A0190	Alternator
0124525080	A0221	Alternator
0124525082	A0168	Alternator
0124525084	A0165	Alternator
0124525089	A3033	Alternator
0124525091	A0190	Alternator
0124525092	A0190	Alternator
0124525102	A0190	Alternator
0124525133	A0165	Alternator
0124525135	A0164	Alternator
0124525140	A0168	Alternator
0124525141	A0165	Alternator
0124555001	A0034	Alternator
0124555002	A0034	Alternator
0124555003	A0120	Alternator
0124555004	A0034	Alternator
0124555005	A0074	Alternator
0124555008	A0124	Alternator
0124555009	A0123	Alternator
0124555013	A0193	Alternator
0124555014	A0192	Alternator
0124555017	A0123	Alternator
0124555018	A0211	Alternator
0124555020	A0138	Alternator
0124555022	A0034	Alternator
0124555027	A0138	Alternator
0124555028	A0138	Alternator
0124555032	A0034	Alternator
0124555041	A0120	Alternator
0124615002	A3027	Alternator
0124615007	A0160	Alternator
0124615009	A0076	Alternator
0124615012	A0194	Alternator
0124615015	A0169	Alternator
0124615019	A0169	Alternator
0124615027	A3051	Alternator
0124615028	A0208	Alternator

BOSCH	AS	PRODUCT
0124615031	A0170	Alternator
0124615033	A0169	Alternator
0124615035	A0169	Alternator
0124615044	A0194	Alternator
0124615049	A0194	Alternator
0124625001	A0146	Alternator
0124625002	A0218	Alternator
0124625003	A0146	Alternator
0124625006	A0199	Alternator
0124625014	A0222	Alternator
0124625019	A0201R	Alternator
0124625022	A0207	Alternator
0124625045	A0222	Alternator
0124655001	A0053	Alternator
0124655002	A0053	Alternator
0124655003	A0122	Alternator
0124655004	A0053	Alternator
0124655005	A0072	Alternator
0124655007	A0064	Alternator
0124655008	A0063	Alternator
0124655009	A0062	Alternator
0124655012	A0139	Alternator
0124655016	A0053	Alternator
0124655019	A0139	Alternator
0124655023	A0053	Alternator
0124655036	A0122	Alternator
0124655037	A0122	Alternator
0124655039	A0122	Alternator
0124A00238	AFP0044	FW pulley
0190053020	ARE0024	Regulator
0192052001	ARE0001	Regulator
0192052002	ARE0001	Regulator
0192052003	ARE0001	Regulator
0192052004	ARE0001	Regulator
0192052005	ARE0001	Regulator
0192052006	ARE0001	Regulator
0192052007	ARE0031	Regulator
0192052008	ARE0001	Regulator
0192052010	ARE0015	Regulator
0192052011	ARE0001	Regulator
0192052012	ARE0001	Regulator
0192052013	ARE0001	Regulator
0192052014	ARE0001	Regulator
0192052015	ARE0002	Regulator
0192052016	ARE0002	Regulator
0192052017	ARE0001	Regulator
0192052018	ARE0001	Regulator
0192052019	ARE0001	Regulator
0192052020	ARE0021	Regulator
0192052021	ARE0002	Regulator
0192052022	ARE0001	Regulator
0192052024	ARE0002	Regulator
0192052025	ARE0002	Regulator
0192052026	ARE0001	Regulator
0192052027	ARE0002	Regulator
0192052028	ARE0001	Regulator
0192052029	ARE0002	Regulator
0192052031	ARE0001	Regulator
0192052032	ARE0047	Regulator
0192052033	ARE0021	Regulator
0192052034	ARE0047	Regulator
0192052035	ARE0002	Regulator
0192053001	ARE0015	Regulator
0192053002	ARE0015	Regulator
0192053003	ARE0032	Regulator
0192053004	ARE0015	Regulator
0192053005	ARE0027	Regulator
0192053006	ARE0027	Regulator
0192053007	ARE0015	Regulator
0192053008	ARE0015	Regulator
0192053009	ARE0032	Regulator
0192053011	ARE0027	Regulator
0192053012	ARE0032	Regulator
0192053013	ARE0027	Regulator
0192053014	ARE0032	Regulator
0192053015	ARE0024	Regulator
0192053016	ARE0027	Regulator
0192053017	ARE0027	Regulator
0192053018	ARE0027	Regulator
0192053019	ARE0028	Regulator
0192053020	ARE0024	Regulator
0192053021	ARE0035	Regulator
0192053022	ARE0027	Regulator
0192053023	ARE0027	Regulator
0192053025	ARE0032	Regulator
0192053027	ARE0015	Regulator
0192053032	ARE0021	Regulator
0221601003	IC9004	Ignition Coil
0221601004	IC9004	Ignition Coil
0221601006	IC9004	Ignition Coil
0221603006	IM0002	Ignition Module
0221603009	IM0002	Ignition Module
0221603010	IM0002	Ignition Module
0227100140	IM0001	Ignition Module
0270100105	ARD9005	Diode
0270100113	ARD9005	Diode
0270100311	ARD9005	Diode
0270100313	ARD9005	Diode
0270100333	ARD9005	Diode
0270100336	ARD9005	Diode
0270100351	ARD9005	Diode
0270100353	ARD9005	Diode
0270100354	ARD9014	Diode
0270100357	ARD9005	Diode
0270100358	ARD9014	Diode
0270100423	ARD9005	Diode
0330105001	SS0001	Starter solenoid
0331100016	SS0002	Starter solenoid
0331101006	SS0002	Starter solenoid
0331101009	SS0002	Starter solenoid
0331101016	SS0002	Starter solenoid
0331302040	SS0057	Starter solenoid
0331302051	SS0057	Starter solenoid
0331302053	SS0056	Starter solenoid
0331302060	SS0014	Starter solenoid
0331302062	SS0024	Starter solenoid
0331302064	SS0057	Starter solenoid
0331302066	SS0057	Starter solenoid
0331302070	SS0057	Starter solenoid
0331302081	SS0024	Starter solenoid
0331302084	SS0024	Starter solenoid
0331302087	SS0006	Starter solenoid
0331302089	SS0057	Starter solenoid
0331302093	SS0057	Starter solenoid
0331302094	SS0024	Starter solenoid
0331302096	SS0014	Starter solenoid
0331302540	SS0057	Starter solenoid
0331302596	SS0014	Starter solenoid
0331303002	SS0010	Starter solenoid
0331303003	SS0006	Starter solenoid
0331303005	SS0005	Starter solenoid
0331303006	SS0011	Starter solenoid
0331303007	SS0006	Starter solenoid
0331303008	SS0064	Starter solenoid
0331303010	SS0006	Starter solenoid
0331303013	SS0010	Starter solenoid
0331303015	SS0006	Starter solenoid
0331303016	SS0005	Starter solenoid
0331303017	SS0035	Starter solenoid
0331303019	SS0006	Starter solenoid
0331303020	SS0010	Starter solenoid
0331303022	SS0065	Starter solenoid
0331303024	SS0010	Starter solenoid
0331303026	SS0011	Starter solenoid
0331303028	SS0005	Starter solenoid
0331303029	SS0010	Starter solenoid
0331303030	SS0006	Starter solenoid
0331303031	SS0005	Starter solenoid
0331303032	SS0010	Starter solenoid
0331303033	SS0064	Starter solenoid
0331303038	SS0006	Starter solenoid
0331303040	SS0006	Starter solenoid
0331303041	SS0010	Starter solenoid
0331303045	SS0011	Starter solenoid
0331303046	SS0034	Starter solenoid
0331303048	SS0019	Starter solenoid
0331303049	SS0011	Starter solenoid
0331303055	SS0012	Starter solenoid
0331303056	SS0012	Starter solenoid
0331303058	SS0011	Starter solenoid
0331303059	SS0010	Starter solenoid
0331303061	SS0019	Starter solenoid
0331303064	SS0011	Starter solenoid
0331303066	SS0062	Starter solenoid
0331303068	SS0034	Starter solenoid
0331303070	SS0011	Starter solenoid
0331303071	SS0010	Starter solenoid
0331303074	SS0064	Starter solenoid
0331303076	SS0012	Starter solenoid
0331303078	SS0064	Starter solenoid
0331303084	SS0064	Starter solenoid
0331303086	SS0018	Starter solenoid
0331303092	SS0010	Starter solenoid
0331303094	SS0067	Starter solenoid
0331303100	SS0034	Starter solenoid
0331303102	SS0034	Starter solenoid
0331303107	SS0066	Starter solenoid
0331303108	SS0023	Starter solenoid
0331303110	SS0034	Starter solenoid
0331303115	SS0035	Starter solenoid
0331303116	SS0025	Starter solenoid
0331303117	SS0025	Starter solenoid
0331303118	SS0063	Starter solenoid
0331303120	SS0011	Starter solenoid
0331303124	SS0020	Starter solenoid
0331303125	SS0020	Starter solenoid

BOSCH	AS	PRODUCT
0331303126	SS0034	Starter solenoid
0331303132	SS0012	Starter solenoid
0331303133	SS0063	Starter solenoid
0331303134	SS0048	Starter solenoid
0331303135	SS0035	Starter solenoid
0331303140	SS0018	Starter solenoid
0331303142	SS0046	Starter solenoid
0331303145	SS0036	Starter solenoid
0331303146	SS0037	Starter solenoid
0331303147	SS0017	Starter solenoid
0331303148	SS0020	Starter solenoid
0331303153	SS0011	Starter solenoid
0331303154	SS0019	Starter solenoid
0331303167	SS0020	Starter solenoid
0331303229	SS0036	Starter solenoid
0331303231	SS0010	Starter solenoid
0331303240	SS0064	Starter solenoid
0331303241	SS0064	Starter solenoid
0331303250	SS0064	Starter solenoid
0331303263	SS0035	Starter solenoid
0331303272	SS0063	Starter solenoid
0331303503	SS0006	Starter solenoid
0331303506	SS0011	Starter solenoid
0331303520	SS0010	Starter solenoid
0331303522	SS0065	Starter solenoid
0331303530	SS0006	Starter solenoid
0331303540	SS0018	Starter solenoid
0331303555	SS0012	Starter solenoid
0331303559	SS0010	Starter solenoid
0331303571	SS0010	Starter solenoid
0331303600	SS0020	Starter solenoid
0331303602	SS0034	Starter solenoid
0331303607	SS0066	Starter solenoid
0331303616	SS0025	Starter solenoid
0331303617	SS0025	Starter solenoid
0331303618	SS0063	Starter solenoid
0331303624	SS0020	Starter solenoid
0331303626	SS0034	Starter solenoid
0331303633	SS0063	Starter solenoid
0331303640	SS0018	Starter solenoid
0331303642	SS0046	Starter solenoid
0331303647	SS0017	Starter solenoid
0331303653	SS0011	Starter solenoid
0331303654	SS0019	Starter solenoid
0331304001	SS0021	Starter solenoid
0331304053	SS0021	Starter solenoid
0331401025	SS9018	Starter solenoid
0331401033	SS9018	Starter solenoid
0331401038	SS0015	Starter solenoid
0331401040	SS0003	Starter solenoid
0331401045	SS0015	Starter solenoid
0331402001	SS0003	Starter solenoid
0331402002	SS0015	Starter solenoid
0331402003	SS0015	Starter solenoid
0331402004	SS0003	Starter solenoid
0331402005	SS0008	Starter solenoid
0331402006	SS0009	Starter solenoid
0331402010	SS0004	Starter solenoid
0331402011	SS0003	Starter solenoid
0331402013	SS0007	Starter solenoid
0331402019	SS0003	Starter solenoid
0331402027	SS0053	Starter solenoid
0331402028	SS0053	Starter solenoid
0331402030	SS0003	Starter solenoid
0331402033	SS0003	Starter solenoid
0331402034	SS0009	Starter solenoid
0331402035	SS0003	Starter solenoid
0331402039	SS0003	Starter solenoid
0331402042	SS0009	Starter solenoid
0331402043	SS0009	Starter solenoid
0331402044	SS0008	Starter solenoid
0331402068	SS0009	Starter solenoid
0331402070	SS0009	Starter solenoid
0331402087	SS0003	Starter solenoid
0331402096	SS0053	Starter solenoid
0331402200	SS0007	Starter solenoid
0331402201	SS0004	Starter solenoid
0331402202	SS0015	Starter solenoid
0331402204	SS0003	Starter solenoid
0331402205	SS0003	Starter solenoid
0331402208	SS0008	Starter solenoid
0331402209	SS0009	Starter solenoid
0331402501	SS0003	Starter solenoid
0331402502	SS0015	Starter solenoid
0331402503	SS0015	Starter solenoid
0331402504	SS0003	Starter solenoid
0331402505	SS0008	Starter solenoid
0331402510	SS0004	Starter solenoid
0331402513	SS0007	Starter solenoid
0331402528	SS0053	Starter solenoid
0331402535	SS0003	Starter solenoid
0331402539	SS0003	Starter solenoid
0331402570	SS0009	Starter solenoid
0331402704	SS0003	Starter solenoid
0331402708	SS0008	Starter solenoid
0331403003	SS0027	Starter solenoid
0331403004	SS0027	Starter solenoid
0331450001	SS0001	Starter solenoid
0331450002	SS0031	Starter solenoid
0331450004	SS0001	Starter solenoid
0331450005	SS0001	Starter solenoid
0331450009	SS0032	Starter solenoid
0333 006 004	SS9003	Starter solenoid
0333 006 006	SS9004	Starter solenoid
0333 009 002	SS9006	Starter solenoid
0333 009 004	SS9005	Starter solenoid
0986010030	S1013	Starter
0986010031	S1013	Starter
0986010310	S3015	Starter
0986010311	S3015	Starter
0986010430	S9057	Starter
0986010431	S9057	Starter
0986010450	S4020	Starter
0986010470	S0077	Starter
0986010530	S0046	Starter
0986010590	S0183	Starter
0986010600	S0236	Starter
0986010601	S0236	Starter
0986010950	S4007	Starter
0986010970	S0075	Starter
0986010971	S0075	Starter
0986010980	S0107	Starter
0986010990	S0115	Starter
0986011000	S0219(BOSCH)R	Starter
0986011020	S9043	Starter
0986011021	S9043	Starter
0986011060	S4037(MM)R	Starter
0986011061	S4037(MM)R	Starter
0986011080	S4036(MM)R	Starter
0986011081	S4036(MM)R	Starter
0986011130	S9046	Starter
0986011140	S0115	Starter
0986011160	S4021	Starter
0986011161	S4021	Starter
0986011200	S0115	Starter
0986011210	S9043	Starter
0986011220	S0116	Starter
0986011221	S0116	Starter
0986011240	S0067	Starter
0986011270	S0068	Starter
0986011280	S0197	Starter
0986011290	S0041	Starter
0986011291	S0041	Starter
0986011310	S0118	Starter
0986011311	S0118	Starter
0986011330	S0092	Starter
0986011331	S0092	Starter
0986011360	S0002	Starter
0986011361	S4023	Starter
0986011380	S0235	Starter
0986011490	S0003	Starter
0986011510	S0003	Starter
0986011513	S0003	Starter
0986011550	S0151	Starter
0986011570	S0001	Starter
0986011590	S0162	Starter
0986011651	S3014	Starter
0986011830	S3014	Starter
0986011838	S3014	Starter
0986011891	S4033	Starter
0986011898	S4033	Starter
0986011910	S0128	Starter
0986011911	S0128	Starter
0986011950	S4023	Starter
0986012111	S9025	Starter
0986012271	S5014	Starter
0986012290	S2017	Starter
0986012301	S5002	Starter
0986012328	S0015	Starter
0986012340	S0004	Starter
0986012341	S0004	Starter
0986012420	S0117	Starter
0986012480	S0220(BOSCH)R	Starter
0986012598	S0072	Starter
0986012600	S0072	Starter
0986012610	S0205	Starter
0986012670	S0152	Starter
0986012671	S0152	Starter
0986012700	S0145	Starter
0986012710	S0114	Starter
0986012730	S0011	Starter
0986012740	S0007	Starter
0986012750	S9054	Starter
0986012821	S6009	Starter
0986012871	S5002	Starter
0986012931	S5025	Starter

BOSCH	AS	PRODUCT
0986012950	S0002	Starter
0986013010	S0087	Starter
0986013050	S0045	Starter
0986013088	S0217	Starter
0986013098	S0069	Starter
0986013120	S0004	Starter
0986013121	S0004	Starter
0986013140	S0043	Starter
0986013150	S0029	Starter
0986013190	S4008	Starter
0986013200	S3001	Starter
0986013240	S0084	Starter
0986013241	S0084	Starter
0986013260	S0216	Starter
0986013270	S0247	Starter
0986013280	S0247	Starter
0986013293	S0247	Starter
0986013298	S0247	Starter
0986013350	S0014	Starter
0986013400	S0204	Starter
0986013418	S0047	Starter
0986013420	S0221(BOSCH)R	Starter
0986013440	S0008	Starter
0986013450	S0065	Starter
0986013470	S0050	Starter
0986013478	S0050	Starter
0986013480	S0067	Starter
0986013490	S0002	Starter
0986013501	S5014	Starter
0986013511	S5014	Starter
0986013600	S0055	Starter
0986013618	S0034	Starter
0986013630	S0133	Starter
0986013640	S0132	Starter
0986013641	S0132	Starter
0986013650	S0127	Starter
0986013660	S0148	Starter
0986013680	S9044	Starter
0986013690	S4010	Starter
0986013720	S0040	Starter
0986013733	S0001	Starter
0986013850	S3005	Starter
0986013851	S3005	Starter
0986013910	S0144	Starter
0986013940	S4039	Starter
0986013941	S4039	Starter
0986014101	S6002	Starter
0986014141	S5005	Starter
0986014341	S5023	Starter
0986014350	S5016	Starter
0986014351	S5016	Starter
0986014360	S6018	Starter
0986014361	S6018	Starter
0986014511	S6013	Starter
0986014560	S0023	Starter
0986014580	S0187	Starter
0986014660	S0016	Starter
0986014710	S4033	Starter
0986014718	S4033	Starter
0986014730	S0112	Starter
0986014740	S0117	Starter
0986014761	S2015	Starter
0986014810	S0190R	Starter
0986014820	S0190R	Starter
0986014830	S0077	Starter
0986014840	S0052	Starter
0986014900	S0044	Starter
0986014910	S0063	Starter
0986014940	S0051	Starter
0986014950	S9008	Starter
0986014951	S9008	Starter
0986014971	S6002	Starter
0986014981	S5014	Starter
0986014991	S5012	Starter
0986015010	S3015	Starter
0986015011	S3015	Starter
0986015090	S0161	Starter
0986015320	S0038	Starter
0986015328	S0038	Starter
0986015331	S6001	Starter
0986015610	S0166	Starter
0986015670	S0022	Starter
0986015680	S1009	Starter
0986015701	S9010	Starter
0986015920	S0165	Starter
0986016001	S5020	Starter
0986016020	S2015	Starter
0986016021	S2015	Starter
0986016031	S2005	Starter
0986016130	S3031	Starter
0986016141	S0084	Starter
0986016161	S2002	Starter
0986016210	S0042	Starter
0986016230	S0057	Starter
0986016240	S0039	Starter
0986016280	S0126	Starter
0986016290	S0062	Starter
0986016300	S0033	Starter
0986016330	S0054	Starter
0986016340	S0142	Starter
0986016380	S0087	Starter
0986016390	S0016	Starter
0986016400	S3004	Starter
0986016401	S3004	Starter
0986016431	S5018	Starter
0986016451	S5040	Starter
0986016470	S0124	Starter
0986016480	S9031	Starter
0986016520	S0003	Starter
0986016530	S3009	Starter
0986016531	S3009	Starter
0986016550	S0174	Starter
0986016560	S0056	Starter
0986016570	S3052	Starter
0986016591	S5017	Starter
0986016611	S0183	Starter
0986016660	S0059	Starter
0986016681	S2010	Starter
0986016700	S0146	Starter
0986016711	S3011	Starter
0986016750	S0131	Starter
0986016780	S0030	Starter
0986016790	S4016	Starter
0986016800	S0104	Starter
0986016870	S0105	Starter
0986016880	S0098	Starter
0986016890	S0034	Starter
0986016950	S0017	Starter
0986016980	S0025	Starter
0986016990	S3026	Starter
0986017000	S0006	Starter
0986017020	S0064	Starter
0986017030	S4022	Starter
0986017031	S4022	Starter
0986017041	S4033	Starter
0986017050	S0021	Starter
0986017060	S0096	Starter
0986017110	S0073	Starter
0986017120	S1013	Starter
0986017220	S0204	Starter
0986017240	S0037	Starter
0986017250	S0010	Starter
0986017260	S0026	Starter
0986017300	S0093	Starter
0986017320	S0019	Starter
0986017381	S3001	Starter
0986017391	S3001	Starter
0986017420	S0036	Starter
0986017430	S0066	Starter
0986017440	S0106	Starter
0986017450	S0094	Starter
0986017460	S0025	Starter
0986017490	S0018	Starter
0986017500	S0020	Starter
0986017520	S0196	Starter
0986017530	S0157	Starter
0986017541	S2017	Starter
0986017571	S5040	Starter
0986017661	S2016	Starter
0986017691	S5002	Starter
0986017760	S0024	Starter
0986017770	S0241	Starter
0986017781	S4015	Starter
0986017790	S0195	Starter
0986017810	S0097	Starter
0986017830	S0027	Starter
0986017840	S3007	Starter
0986017850	S0012	Starter
0986017860	S0041	Starter
0986017863	S0041	Starter
0986017870	S0040	Starter
0986017920	S0098	Starter
0986017930	S3019	Starter
0986017950	S0166	Starter
0986017960	S0206	Starter
0986017980	S0160	Starter
0986017990	S0070	Starter
0986018010	S0088	Starter
0986018020	S0176	Starter
0986018030	S0154	Starter
0986018040	S0048	Starter
0986018060	S0233	Starter
0986018090	S0135	Starter
0986018151	S4013	Starter
0986018161	S4001	Starter
0986018190	S0015	Starter

BOSCH	AS	PRODUCT
0986018200	S0072	Starter
0986018210	S0217	Starter
0986018220	S0069	Starter
0986018230	S0247	Starter
0986018250	S0047	Starter
0986018260	S0034	Starter
0986018270	S0091	Starter
0986018290	S0066	Starter
0986018310	S3002	Starter
0986018321	S2004	Starter
0986018331	S2002	Starter
0986018350	S0141	Starter
0986018360	S0225	Starter
0986018370	S0074	Starter
0986018380	S0049	Starter
0986018390	S0248	Starter
0986018400	S3030	Starter
0986018410	S0125	Starter
0986018420	S0221(BOSCH)R	Starter
0986018430	S0032	Starter
0986018450	S0246	Starter
0986018460	S0073	Starter
0986018480	S0168	Starter
0986018490	S0099	Starter
0986018500	S0224	Starter
0986018531	S3056	Starter
0986018541	S3063	Starter
0986018561	S3013	Starter
0986018570	S3020	Starter
0986018571	S3020	Starter
0986018581	S3030	Starter
0986018591	S3004	Starter
0986018621	S4034	Starter
0986018630	S3036	Starter
0986018651	S3048	Starter
0986018661	S3049	Starter
0986018680	S0020	Starter
0986018711	S5037	Starter
0986018721	S5034	Starter
0986018731	S5046	Starter
0986018770	S0225	Starter
0986018780	S0076	Starter
0986018790	S0220(BOSCH)R	Starter
0986018800	S0109	Starter
0986018810	S0008	Starter
0986018830	S0226	Starter
0986018850	S0087	Starter
0986018860	S0223(BOSCH)	Starter
0986018900	S0230	Starter
0986018910	S0155	Starter
0986018920	S0119	Starter
0986018930	S0095	Starter
0986018940	S0192	Starter
0986018950	S0099	Starter
0986018960	S0089	Starter
0986018970	S0163	Starter
0986018980	S0081	Starter
0986018990	S0078	Starter
0986018993	S0078	Starter
0986019000	S0001	Starter
0986019003	S0001	Starter
0986019010	S0080	Starter
0986019020	S0129	Starter
0986019030	S0103	Starter
0986019040	S3045	Starter
0986019171	S6026	Starter
0986019271	S3001	Starter
0986019311	S4016	Starter
0986019320	S0111	Starter
0986019361	S2001	Starter
0986019370	S0028	Starter
0986019500	S0136	Starter
0986019550	S0146	Starter
0986019830	S0108	Starter
0986019870	S0088	Starter
0986019873	S0088	Starter
0986019930	S0241	Starter
0986019970	S0231	Starter
0986019980	S0093	Starter
0986020041	S5019	Starter
0986020070	S0085	Starter
0986020073	S0085	Starter
0986020091	S5009	Starter
0986020093	S5009	Starter
0986020113	S2010	Starter
0986020121	S3039	Starter
0986020131	S3058R	Starter
0986020141	S3024	Starter
0986020170	S0082	Starter
0986020181	S9001	Starter
0986020193	S0107	Starter
0986020220	S3043	Starter
0986020230	S3037	Starter
0986020240	S3055	Starter
0986020250	S0090	Starter
0986020260	S0243	Starter
0986020270	S0214	Starter
0986020290	S3044	Starter
0986020300	S0140	Starter
0986020320	S0229	Starter
0986020350	S0227	Starter
0986020360	S0203	Starter
0986020370	S0234	Starter
0986020401	S5033	Starter
0986020421	S5007	Starter
0986020531	S6020	Starter
0986020551	S0168	Starter
0986020591	S6021	Starter
0986020601	S6011	Starter
0986020821	S2011	Starter
0986020831	S6019	Starter
0986020850	S0240	Starter
0986020870	S0088	Starter
0986020880	S0071	Starter
0986020890	S0244	Starter
0986020900	S0185	Starter
0986021000	S0079	Starter
0986021010	S0048	Starter
0986021030	S0225	Starter
0986021041	S4017	Starter
0986021051	S3008	Starter
0986021060	S0168	Starter
0986021190	S0178	Starter
0986021210	S0171	Starter
0986021230	S0228	Starter
0986021240	S0100	Starter
0986021270	S0210	Starter
0986021280	S0136	Starter
0986021310	S0136	Starter
0986021351	S9002	Starter
0986021360	S0218	Starter
0986021480	S0138	Starter
0986021490	S0137	Starter
0986021500	S0242	Starter
0986021520	S0235	Starter
0986021550	S0121	Starter
0986021590	S4025	Starter
0986021610	S0175	Starter
0986021620	S0155	Starter
0986021630	S0193	Starter
0986021640	S0139	Starter
0986021651	S3016	Starter
0986021671	S3064	Starter
0986021741	S5038	Starter
0986021810	S0123	Starter
0986021830	S0195	Starter
0986022033	S2001	Starter
0986022101	S6016	Starter
0986022121	S9020	Starter
0986022131	S9036	Starter
0986022250	S0173	Starter
0986022260	S0194	Starter
0986022411	S4025	Starter
0986022561	S9015	Starter
0986022581	S4031	Starter
0986022621	S6012	Starter
0986022631	S9035	Starter
0986022680	S4019	Starter
0986022710	S4035	Starter
0986022740	S5026	Starter
0986022750	S4004	Starter
0986022760	S6007	Starter
0986022770	S6008	Starter
0986022790	S3029	Starter
0986022800	S5035	Starter
0986022820	S6024	Starter
0986022840	S9032	Starter
0986022850	S9004	Starter
0986022880	S0093	Starter
0986022910	S5044	Starter
0986022980	S5049	Starter
0986030110	A0013	Alternator
0986030120	A0012	Alternator
0986030130	A0004	Alternator
0986030140	A4009	Alternator
0986030290	A0184	Alternator
0986030518	A0103	Alternator
0986030520	A0001	Alternator
0986030660	A0020	Alternator
0986030720	A0069	Alternator
0986030721	A0069	Alternator
0986030768	A4011	Alternator
0986030970	A4039	Alternator
0986030971	A4039	Alternator
0986031000	A3013	Alternator
0986031008	A3013	Alternator

BOSCH	AS	PRODUCT
0986031190	A0099	Alternator
0986031260	A0030	Alternator
0986031270	A0014	Alternator
0986031300	A0020	Alternator
0986031310	A0017	Alternator
0986031320	A0102	Alternator
0986031330	A0084	Alternator
0986031340	A4029	Alternator
0986031400	A0069	Alternator
0986031408	A0069	Alternator
0986031430	A0069	Alternator
0986031431	A0069	Alternator
0986031480	A0098	Alternator
0986031488	A0098	Alternator
0986031641	A3045	Alternator
0986032340	A4081	Alternator
0986032341	A4081	Alternator
0986032361	A3046	Alternator
0986032651	A2036	Alternator
0986032681	A2036	Alternator
0986032710	A0055	Alternator
0986032720	A0058	Alternator
0986032738	A0094	Alternator
0986032800	A0069	Alternator
0986033090	A0109	Alternator
0986033100	A0087	Alternator
0986033118	A0103	Alternator
0986033160	A0094	Alternator
0986033230	A4039	Alternator
0986033250	A4059	Alternator
0986033251	A4059	Alternator
0986033330	A0030	Alternator
0986033400	A0001	Alternator
0986033510	A0017	Alternator
0986033570	A0017	Alternator
0986033670	A0031	Alternator
0986033680	A0031	Alternator
0986033728	A0031	Alternator
0986033730	A0031	Alternator
0986033780	A0069	Alternator
0986033810	A0031	Alternator
0986033811	A0031	Alternator
0986033840	A0009	Alternator
0986033841	A3060	Alternator
0986033878	A0091	Alternator
0986033891	A4065	Alternator
0986034020	A0015	Alternator
0986034030	A0015	Alternator
0986034060	A0031	Alternator
0986034070	A0101	Alternator
0986034130	A0094	Alternator
0986034158	A0094	Alternator
0986034168	A0094	Alternator
0986034200	A4011	Alternator
0986034230	A0028	Alternator
0986034231	A0028	Alternator
0986034260	A0020	Alternator
0986034270	A0097	Alternator
0986034350	A0100	Alternator
0986034370	A0108	Alternator
0986034400	A0001	Alternator
0986034430	A0203	Alternator
0986034470	A4012	Alternator
0986034473	A4012	Alternator
0986034518	A0028	Alternator
0986034560	A0141	Alternator
0986034620	A0069	Alternator
0986034621	A0069	Alternator
0986034650	A0134	Alternator
0986034651	A0134	Alternator
0986034700	A0104	Alternator
0986034710	A0104	Alternator
0986034780	A3007	Alternator
0986034781	A3007	Alternator
0986034810	A3048	Alternator
0986034818	A3048	Alternator
0986034841	A3009	Alternator
0986034850	A3046	Alternator
0986034851	A3046	Alternator
0986034860	A3001	Alternator
0986034861	A3001	Alternator
0986035020	A0107	Alternator
0986035641	A4063	Alternator
0986035760	A4030	Alternator
0986035770	A0107	Alternator
0986035820	A0070	Alternator
0986035910	A0088	Alternator
0986036000	A0110	Alternator
0986036010	A4011	Alternator
0986036020	A4011	Alternator
0986036048	A4013	Alternator
0986036060	A4067	Alternator
0986036063	A4067	Alternator
0986036191	A4041	Alternator
0986036198	A4041	Alternator
0986036211	A4041	Alternator
0986036240	A0025	Alternator
0986036250	A0115	Alternator
0986036268	A0092	Alternator
0986036280	A0026	Alternator
0986036501	A5028	Alternator
0986036510	A0086	Alternator
0986036520	A0179	Alternator
0986036561	A4014	Alternator
0986036631	A4001	Alternator
0986036690	A0152	Alternator
0986036701	A4019	Alternator
0986036750	A4065	Alternator
0986036790	A0106	Alternator
0986036851	A3012	Alternator
0986036880	A3004	Alternator
0986036881	A3004	Alternator
0986036891	A3005	Alternator
0986036920	A0087	Alternator
0986036951	A3013	Alternator
0986037040	A0110	Alternator
0986037051	A3049	Alternator
0986037070	A0202	Alternator
0986037120	A4065	Alternator
0986037121	A4065	Alternator
0986037130	A4044	Alternator
0986037140	A4065	Alternator
0986037150	A4065	Alternator
0986037160	A4044	Alternator
0986037241	A3099R	Alternator
0986037301	A3002	Alternator
0986037311	A3003	Alternator
0986037321	A3006	Alternator
0986037410	A0001	Alternator
0986037440	A0016	Alternator
0986037531	A2015	Alternator
0986037760	A0010	Alternator
0986037770	A0002	Alternator
0986037791	A3057	Alternator
0986037811	A2020	Alternator
0986037831	A2026	Alternator
0986037901	A3048	Alternator
0986037911	A3046	Alternator
0986037990	A0003	Alternator
0986038003	A2028	Alternator
0986038041	A2031	Alternator
0986038070	A0202	Alternator
0986038090	A0093	Alternator
0986038100	A0093	Alternator
0986038160	A0005	Alternator
0986038170	A0114	Alternator
0986038176	A0114	Alternator
0986038281	A2031	Alternator
0986038290	A0021	Alternator
0986038300	A0111	Alternator
0986038351	A3100R	Alternator
0986038370	A0077	Alternator
0986038380	A0006	Alternator
0986038390	A0131	Alternator
0986038401	A4015	Alternator
0986038421	A6017	Alternator
0986038491	A2004	Alternator
0986038501	A2033	Alternator
0986038581	A5026	Alternator
0986038610	A0078	Alternator
0986038621	A4018	Alternator
0986038650	A0148	Alternator
0986038730	A3020	Alternator
0986038731	A3020	Alternator
0986038740	A3015	Alternator
0986038751	A3016	Alternator
0986038791	A3057	Alternator
0986038811	A3021	Alternator
0986038841	A4008	Alternator
0986038851	A3008	Alternator
0986038861	A3011	Alternator
0986038901	A3008	Alternator
0986038930	A2012	Alternator
0986038950	A0048	Alternator
0986038990	A0153	Alternator
0986039000	A0156	Alternator
0986039030	A0117	Alternator
0986039060	A0118	Alternator
0986039090	A0118	Alternator
0986039100	A3062	Alternator
0986039130	A0023	Alternator
0986039210	A0119	Alternator
0986039240	A0116	Alternator
0986039250	A1012	Alternator
0986039260	A0008	Alternator
0986039300	A0163	Alternator

BOSCH	AS	PRODUCT
0986039321	A4051	Alternator
0986039340	A0025	Alternator
0986039350	A0172	Alternator
0986039370	A0173	Alternator
0986039431	A3075	Alternator
0986039440	A0078	Alternator
0986039471	A4003	Alternator
0986039490	A0029	Alternator
0986039501	A4047	Alternator
0986039510	A0197	Alternator
0986039513	A0197	Alternator
0986039520	A0151	Alternator
0986039530	A0022	Alternator
0986039670	A0155	Alternator
0986039690	A0111	Alternator
0986039740	A0005	Alternator
0986039750	A0133	Alternator
0986039756	A0133	Alternator
0986039790	A0007	Alternator
0986039810	A0089	Alternator
0986039820	A0135	Alternator
0986039831	A3066	Alternator
0986039860	A0187	Alternator
0986039891	A4031	Alternator
0986039941	A3096	Alternator
0986039961	A3014	Alternator
0986039971	A3043	Alternator
0986039980	A3026	Alternator
0986040031	A3044	Alternator
0986040051	A3044	Alternator
0986040190	A3040	Alternator
0986040191	A3040	Alternator
0986040201	A3029	Alternator
0986040210	A3022	Alternator
0986040211	A3022	Alternator
0986040220	A0081	Alternator
0986040221	A0081	Alternator
0986040241	A3031	Alternator
0986040260	A0007	Alternator
0986040270	A0177	Alternator
0986040280	A0082	Alternator
0986040290	A0018	Alternator
0986040330	A0019	Alternator
0986040340	A3081	Alternator
0986040360	A0186	Alternator
0986040380	A0161	Alternator
0986040390	A0157	Alternator
0986040400	A0113	Alternator
0986040461	A6009	Alternator
0986040471	A6012	Alternator
0986040581	A2009	Alternator
0986040600	A0178	Alternator
0986040621	A4060	Alternator
0986040631	A4024	Alternator
0986040641	A4023	Alternator
0986040651	A4004	Alternator
0986040671	A4017	Alternator
0986040800	A0133	Alternator
0986040910	A5026	Alternator
0986040930	A0128	Alternator
0986040940	A0080	Alternator
0986040970	A0130	Alternator
0986041030	A0011	Alternator
0986041040	A0114	Alternator
0986041090	A0001	Alternator
0986041140	A0036	Alternator
0986041150	A0060	Alternator
0986041153	A0060	Alternator
0986041190	A0162	Alternator
0986041210	A0173	Alternator
0986041230	A0040	Alternator
0986041290	A0071	Alternator
0986041310	A0188	Alternator
0986041320	A0173	Alternator
0986041381	A3019	Alternator
0986041451	A3076	Alternator
0986041471	A3095	Alternator
0986041490	A0127	Alternator
0986041500	A0027	Alternator
0986041530	A0032	Alternator
0986041550	A0054	Alternator
0986041570	A0007	Alternator
0986041580	A0001	Alternator
0986041590	A0035	Alternator
0986041630	A0092	Alternator
0986041640	A0021	Alternator
0986041730	A0061	Alternator
0986041740	A0061	Alternator
0986041750	A0226	Starter
0986041760	A0205R	Alternator
0986041771	A2005	Alternator
0986041781	A2005	Alternator
0986041790	A2001	Alternator
0986041791	A2001	Alternator
0986041793	A2001	Alternator
0986041800	A3058	Alternator
0986041810	A0071	Alternator
0986041850	A0044	Alternator
0986041860	A0059	Alternator
0986041870	A0046	Alternator
0986041890	A0036	Alternator
0986041900	A0189	Alternator
0986041920	A0042	Alternator
0986041930	A3027	Alternator
0986041960	A0149	Alternator
0986041961	A0149	Alternator
0986041970	A0033	Alternator
0986041980	A0033	Alternator
0986042000	A0140	Alternator
0986042020	A0041	Alternator
0986042041	A3111	Alternator
0986042051	A3100R	Alternator
0986042081	A3017	Alternator
0986042091	A3023	Alternator
0986042111	A4052	Alternator
0986042141	A3092	Alternator
0986042161	A3064	Alternator
0986042171	A3041	Alternator
0986042181	A3079	Alternator
0986042191	A3028	Alternator
0986042201	A3089	Alternator
0986042211	A3088	Alternator
0986042261	A5006	Alternator
0986042271	A5006	Alternator
0986042281	A5014	Alternator
0986042311	A5018	Alternator
0986042331	A6012	Alternator
0986042360	A0034	Alternator
0986042370	A0034	Alternator
0986042380	A0034	Alternator
0986042390	A0053	Alternator
0986042400	A0053	Alternator
0986042410	A0053	Alternator
0986042420	A0226	Starter
0986042470	A0057	Alternator
0986042490	A0205R	Alternator
0986042520	A0032	Alternator
0986042530	A0032	Alternator
0986042550	A0144	Alternator
0986042560	A0206	Alternator
0986042570	A0067	Alternator
0986042580	A0175	Alternator
0986042583	A0175	Alternator
0986042590	A0073	Alternator
0986042593	A0073	Alternator
0986042600	A0125	Alternator
0986042640	A0158	Alternator
0986042650	A0043	Alternator
0986042720	A0145	Alternator
0986042740	A1011	Alternator
0986042760	A0191	Alternator
0986042770	A0044	Alternator
0986042780	A4023	Alternator
0986042790	A0068	Alternator
0986042800	A0066	Alternator
0986042820	A0075	Alternator
0986042830	A0046	Alternator
0986042840	A0049	Alternator
0986042850	A0022	Alternator
0986042853	A0022	Alternator
0986042881	A9005	Alternator
0986042951	A2007	Alternator
0986043061	A6032	Alternator
0986043091	A3073	Alternator
0986043101	A2011	Alternator
0986043111	A2027	Alternator
0986043113	A2027	Alternator
0986043121	A2032	Alternator
0986043141	A5002	Alternator
0986043480	A0112	Alternator
0986043650	A0032	Alternator
0986043660	A0035	Alternator
0986043670	A0194	Alternator
0986043680	A1001	Alternator
0986043683	A1001	Alternator
0986043890	A0011	Alternator
0986043900	A0035	Alternator
0986043910	A0169	Alternator
0986043941	A2016	Alternator
0986043981	A2003	Alternator
0986043990	A1009	Alternator
0986044000	A0052	Alternator
0986044010	A0121	Alternator
0986044020	A0047	Alternator
0986044030	A0052	Alternator
0986044210	A0225	Alternator

BOSCH	AS	PRODUCT
0986044300	A0050	Alternator
0986044310	A3054	Alternator
0986044320	A0143	Alternator
0986044330	A0045	Alternator
0986044370	A0187	Alternator
0986044380	A0037	Alternator
0986044390	A0056	Alternator
0986044400	A3051	Alternator
0986044440	A0171	Alternator
0986044460	A3033	Alternator
0986044480	A0160	Alternator
0986044490	A0223	Alternator
0986044521	A3036	Alternator
0986044540	A0050	Alternator
0986044611	A9003	Alternator
0986044621	A4020	Alternator
0986044631	A4005	Alternator
0986044651	A4021	Alternator
0986044661	A5017	Alternator
0986044671	A4028	Alternator
0986044691	A9002	Alternator
0986044701	A4035	Alternator
0986044741	A4079	Alternator
0986044761	A4032	Alternator
0986044771	A4026	Alternator
0986044801	A4022	Alternator
0986044841	A3072	Alternator
0986044880	A0198	Alternator
0986044890	A0228	Alternator
0986044900	A0049	Alternator
0986044910	A0076	Alternator
0986044970	A0051	Alternator
0986045001	A2004	Alternator
0986045031	A3094	Alternator
0986045073	A2004	Alternator
0986045101	A3035	Alternator
0986045103	A3035	Alternator
0986045160	A0074	Alternator
0986045170	A0136	Alternator
0986045181	A3082	Alternator
0986045241	A3037	Alternator
0986045251	A3087	Alternator
0986045270	A1001	Alternator
0986045273	A1001	Alternator
0986045280	A0034	Alternator
0986045290	A0053	Alternator
0986045310	A0039	Alternator
0986045320	A0181	Alternator
0986045330	A0180	Alternator
0986045340	A0190	Alternator
0986045370	A9021	Alternator
0986045390	A3097	Alternator
0986045410	A0205R	Alternator
0986045420	A0218	Alternator
0986045430	A0072	Alternator
0986045490	A0120	Alternator
0986045500	A0122	Alternator
0986045521	A5019	Alternator
0986045541	A5020	Alternator
0986045561	A5003	Alternator
0986045581	A5010	Alternator
0986045601	A5025	Alternator
0986045631	A2009	Alternator
0986045651	A2021	Alternator
0986045671	A2006	Alternator
0986045681	A2035	Alternator
0986045701	A2006	Alternator
0986045821	A6028	Alternator
0986045831	A6033	Alternator
0986045861	A6001	Alternator
0986046000	A0114	Alternator
0986046040	A0136	Alternator
0986046050	A0038	Alternator
0986046081	A4080	Alternator
0986046100	A0037	Alternator
0986046120	A0224	Alternator
0986046130	A0220	Alternator
0986046150	A0066	Alternator
0986046160	A0195	Alternator
0986046190	A0196	Alternator
0986046210	A0147	Alternator
0986046220	A0221	Alternator
0986046230	A0209	Alternator
0986046240	A0142	Alternator
0986046250	A0164	Alternator
0986046260	A0165	Alternator
0986046280	A0167	Alternator
0986046290	A0123	Alternator
0986046300	A0208	Alternator
0986046310	A0146	Alternator
0986046320	A0199	Alternator
0986046330	A0222	Alternator
0986046340	A0201R	Alternator
0986046361	A5012	Alternator
0986046401	A2002	Alternator
0986046421	A2014	Alternator
0986046431	A2014	Alternator
0986046460	A0048	Alternator
0986046480	A4049	Alternator
0986046560	A0120	Alternator
0986046570	A0122	Alternator
0986046580	A0124	Alternator
0986046590	A0062	Alternator
0986047140	A0227	Alternator
0986047160	A0022	Alternator
0986047163	A0022	Alternator
0986047220	A0159	Alternator
0986047250	A0127	Alternator
0986047260	A0068	Alternator
0986047290	A1011	Alternator
0986047310	A1011	Alternator
0986047320	A0066	Alternator
0986047340	A0213	Alternator
0986047360	A3074	Alternator
0986047370	A0164	Alternator
0986047400	A0221	Alternator
0986047420	A0193	Alternator
0986047430	A0192	Alternator
0986047440	A0138	Alternator
0986047470	A0146	Alternator
0986047490	A0207	Alternator
0986047540	A0067	Alternator
0986047550	A0194	Alternator
0986047573	A1011	Alternator
0986047820	A0064	Alternator
0986047870	A0001	Alternator
0986047910	A0200	Alternator
0986048100	A0034	Alternator
0986048110	A0053	Alternator
0986048170	A0127	Alternator
0986048180	A0190	Alternator
0986048253	A0121	Alternator
0986048320	A2022	Alternator
0986048323	A2022	Alternator
0986048343	A2038	Alternator
0986048530	A0059	Alternator
0986048550	A0222	Alternator
0986048611	A5009	Alternator
0986048620	A0229	Alternator
0986048630	A4075	Alternator
0986048771	A4074	Alternator
0986048781	A3078	Alternator
0986048791	A4042	Alternator
0986048891	A3102	Alternator
0986048911	A3056	Alternator
0986048921	A3070	Alternator
0986048980	A1016R	Alternator
0986049051	A9004	Alternator
0986049061	A3053	Alternator
0986049071	A6018	Alternator
0986049081	A4058	Alternator
0986049091	A5023	Alternator
0986049101	A3101	Alternator
0986049111	A4062	Alternator
0986049121	A5029	Alternator
0986049131	A4061	Alternator
0986049141	A9023	Alternator
0986049151	A9020	Alternator
0986049161	A3105	Alternator
0986049171	A6010	Alternator
0986049181	A9012	Alternator
0986049191	A9008	Alternator
0986049201	A9006	Alternator
0986049211	A6013	Alternator
0986049221	A6027	Alternator
0986049231	A4043	Alternator
0986049243	A0001	Alternator
0986049253	A0002	Alternator
0986049303	A0016	Alternator
0986049311	A3093	Alternator
0986049320	A0211	Alternator
0986049390	A9034	Alternator
0986049400	A4034	Alternator
0986049420	A4007	Alternator
0986049450	A3084R	Alternator
0986049460	A9011	Alternator
0986049470	A1002	Alternator
0986049500	A9018	Alternator
0986049520	A9016	Alternator
0986049540	A4058	Alternator
0986049550	A9035	Alternator
0986049560	A3032	Alternator
0986049570	A9029	Alternator
0986049600	A1004	Alternator
0986049610	A4077	Alternator
0986049620	A3065	Alternator

BOSCH	AS	PRODUCT
0986049640	A3083	Alternator
0986049660	A3085R	Alternator
0986049670	A6011	Alternator
0986049800	A2023	Alternator
0986190000	ARE6016	Regulator
0986190009	ARE6016	Regulator
0986190019	ARE6016	Regulator
0986190023	ARE6016	Regulator
0986192005	ARE4009	Regulator
0986192015	ARE1010	Regulator
0986192016	ARE5001	Regulator
0986192019	ARE6003	Regulator
0986192021	ARE6001	Regulator
0986192026	ARE2002	Regulator
0986192030	ARE2003	Regulator
0986221000	IC9004	Ignition Coil
0986221001	IC9001	Ignition Coil
0986221023	IC9002	Ignition Coil
0986617270	S0130	Starter
0986AR0761	A9017	Alternator
0986JR0383	S5023	Starter
1000201055K	SBU9020	Bushing
1000301000	SBU9007	Bushing
1000301001	SBU9001	Bushing
1000301002	SBU9006	Bushing
1000301011	SBU9003	Bushing
1000301012	SBU9008	Bushing
1000301021	SBU9002	Bushing
1000301022	SBU9013	Bushing
1000301034	SBU9013	Bushing
1000301042	SBU9007	Bushing
1000301046	SBU9001	Bushing
1000301047	SBU9006	Bushing
1000301054	SBU9017	Bushing
1000301054L	SBU9018	Bushing
1000301055	SBU9019	Bushing
1000301056	SBU9016	Bushing
1000301062	SBU9033	Bushing
1000301063	SBU9014	Bushing
1000301074	SBU9019	Bushing
1000301083	SBU9041	Bushing
1000322005	SBU9021	Bushing
1000390001	SBU9022	Bushing
1000390003	SBU9022	Bushing
1000390004	SBU9022	Bushing
1000917004	ABE9046	Bearing
1001011124	SA0005	Starter armature
1001933106	SL0001	Levers
1001933108	SL0001	Levers
1001933110	SL0001	Levers
1001933111	SL0001	Levers
1001933115	SL0001	Levers
1003421008	SP0007	Solenoids parts
1003421010	SP0007	Solenoids parts
1003421011	SP0007	Solenoids parts
1003421013	SP0007	Solenoids parts
1003421014	SP0007	Solenoids parts
1003421016	SP0007	Solenoids parts
1004001033	SA0044	Starter armature
1004003130	SA0040	Starter armature
1004003133	SA0040	Starter armature
1004003137	SA0003	Starter armature
1004003138	SA0040	Starter armature
1004003142	SA0040	Starter armature
1004003150	SA0018	Starter armature
1004003151	SA0019	Starter armature
1004003152	SA0020	Starter armature
1004003154	SA0018	Starter armature
1004003155	SA0008	Starter armature
1004003157	SA0008	Starter armature
1004003176	SA0008	Starter armature
1004003904	SA0003	Starter armature
1004003907	SA0018	Starter armature
1004003908	SA0019	Starter armature
1004003909	SA0020	Starter armature
1004003912	SA0040	Starter armature
1004003916	SA0008	Starter armature
1004003918	SA0008	Starter armature
1004011018	SA0005	Starter armature
1004011020	SA0026	Starter armature
1004011022	SA0027	Starter armature
1004011023	SA0026	Starter armature
1004011024	SA0026	Starter armature
1004011025	SA0027	Starter armature
1004011026	SA0026	Starter armature
1004011030	SA0044	Starter armature
1004011031	SA0027	Starter armature
1004011032	SA0026	Starter armature
1004011033	SA0044	Starter armature
1004011034	SA0026	Starter armature
1004011036	SA0027	Starter armature
1004011037	SA0044	Starter armature
1004011038	SA0044	Starter armature
1004011039	SA0032	Starter armature
1004011040	SA0030	Starter armature
1004011041	SA0029	Starter armature
1004011042	SA0032	Starter armature
1004011043	SA0031	Starter armature
1004011044	SA0027	Starter armature
1004011045	SA0029	Starter armature
1004011046	SA0033	Starter armature
1004011047	SA0027	Starter armature
1004011048	SA0044	Starter armature
1004011051	SA0026	Starter armature
1004011053	SA0027	Starter armature
1004011054	SA0030	Starter armature
1004011055	SA0029	Starter armature
1004011056	SA0027	Starter armature
1004011057	SA0031	Starter armature
1004011058	SA0033	Starter armature
1004011059	SA0027	Starter armature
1004011062	SA0032	Starter armature
1004011063	SA0033	Starter armature
1004011065	SA0026	Starter armature
1004011066	SA0027	Starter armature
1004011068	SA0032	Starter armature
1004011070	SA0026	Starter armature
1004011071	SA0031	Starter armature
1004011072	SA0037	Starter armature
1004011074	SA0034	Starter armature
1004011076	SA0031	Starter armature
1004011077	SA0026	Starter armature
1004011082	SA0038	Starter armature
1004011083	SA0047	Starter armature
1004011085	SA0026	Starter armature
1004011086	SA0032	Starter armature
1004011087	SA0034	Starter armature
1004011088	SA0037	Starter armature
1004011089	SA0053	Starter armature
1004011091	SA0031	Starter armature
1004011096	SA0047	Starter armature
1004011097	SA0033	Starter armature
1004011099	SA0029	Starter armature
1004011104	SA0004	Starter armature
1004011108	SA0006	Starter armature
1004011113	SA0006	Starter armature
1004011118	SA0005	Starter armature
1004011122	SA0006	Starter armature
1004011123	SA0007	Starter armature
1004011124	SA0005	Starter armature
1004011125	SA0004	Starter armature
1004011139	SA0054	Starter armature
1004011142	SA0054	Starter armature
1004011144	SA0005	Starter armature
1004011201	SA0027	Starter armature
1004011203	SA0026	Starter armature
1004011206	SA0044	Starter armature
1004011208	SA0049	Starter armature
1004011212	SA0056	Starter armature
1004011216	SA0055	Starter armature
1004011220	SA0037	Starter armature
1004011245	SA0060	Starter
1004011901	SA0027	Starter armature
1004011902	SA0029	Starter armature
1004012404	SA0043	Starter armature
1004012407	SA0043	Starter armature
1004012408	SA0021	Starter armature
1004012415	SA0024	Starter armature
1004012416	SA0002	Starter armature
1004012417	SA0043	Starter armature
1004012421	SA0023	Starter armature
1004012422	SA0023	Starter armature
1004012427	SA0058	Starter armature
1004012429	SA0024	Starter armature
1004012431	SA0021	Starter armature
1004012432	SA0023	Starter armature
1004012450	SA0025	Starter armature
1004012452	SA0043	Starter armature
1004012904	SA0058	Starter armature
1004012905	SA0023	Starter armature
1004012906	SA0021	Starter armature
1004012907	SA0024	Starter armature
1004012910	SA0024	Starter armature
1004012911	SA0022	Starter armature
1004012917	SA0043	Starter armature
1004012927	SA0002	Starter armature
1004014104	SA0043	Starter armature
1004112906	SF0007	Starter field coil
1004320110	BSX157-158	Sta. Brush set
1004320113	BSX159-160	Sta. Brush set
1004320158	BSX196	Sta. Brush set
1004336025	SBH0016	S. Brush holder
1004336029	SBH0016	S. Brush holder
1004336055	SBH0016	S. Brush holder
1004336100	SBH0005	S. Brush holder
1004336101	SBH0005	S. Brush holder

BOSCH	AS	PRODUCT
1004336102	SBH0006	S. Brush holder
1004336107	SBH0005	S. Brush holder
1004336108	SBH0005	S. Brush holder
1004336125	SBH0007	S. Brush holder
1004336130	SBH0007	S. Brush holder
1004336132	SBH0007	S. Brush holder
1004336138	SBH0031	S. Brush holder
1004336139	SBH0007	S. Brush holder
1004336146	SBH0007	S. Brush holder
1004336155	SBH0007	S. Brush holder
1004336156	SBH0007	S. Brush holder
1004336162	SBH0007	S. Brush holder
1004336218	SBH0010	S. Brush holder
1004336233	SBH0014	S. Brush holder
1004336239	SBH0020	S. Brush holder
1004336362	SBH0013	S. Brush holder
1004336368	SBH0030	S. Brush holder
1004336392	SBH0028	S. Brush holder
1004336402	SBH0008	S. Brush holder
1004336403	SBH0007	S. Brush holder
1004336404	SBH0009	S. Brush holder
1004336407	SBH0009	S. Brush holder
1004336411	SBH0031	S. Brush holder
1004336413	SBH0009	S. Brush holder
1004336415	SBH0020	S. Brush holder
1004336417	SBH0012	S. Brush holder
1004336421	SBH0020	S. Brush holder
1004336426	SBH0013	S. Brush holder
1004336428	SBH0020	S. Brush holder
1004336432	SBH0020	S. Brush holder
1004336433	SBH0034	S. Brush holder
1004336434	SBH0031	S. Brush holder
1004336444	SBH0028	S. Brush holder
1004336446	SBH0008	S. Brush holder
1004336455	SBH0008	S. Brush holder
1004336456	SBH0014	S. Brush holder
1004336459	SBH0008	S. Brush holder
1004336460	SBH0009	S. Brush holder
1004336462	SBH0020	S. Brush holder
1004336463	SBH0014	S. Brush holder
1004336466	SBH0008	S. Brush holder
1004336506	SBH0033	S. Brush holder
1004336518	SBH0025	S. Brush holder
1004336526	SBH0029	S. Brush holder
1004336536	SBH0036	S. Brush holder
1004336542	SBH0029	S. Brush holder
1004336549	SBH0032	S. Brush holder
1004336574	SBH0035	S. Brush holder
1004336619	SBH0032	S. Brush holder
1004336620	SBH0008	S. Brush holder
1004336674	SBH0027	Brush holder
1004336695	SBH0027	Brush holder
1004336702	SBH0029	S. Brush holder
1004336703	SBH0029	S. Brush holder
1004336712	SBH0036	S. Brush holder
1004336717	SBH0028	S. Brush holder
1004336718	SBH0029	S. Brush holder
1004336727	SBH0036	S. Brush holder
1004336732	SBH0008	S. Brush holder
1004336734	SBH0009	S. Brush holder
1004336740	SBH0031	S. Brush holder
1004336744	SBH0020	S. Brush holder
1004336746	SBH0012	S. Brush holder
1004336750	SBH0032	S. Brush holder
1004336753	SBH0034	S. Brush holder
1004336764	SBH0009	S. Brush holder
1004336770	SBH0036	S. Brush holder
1004336772	SBH0013	S. Brush holder
1004336784	SBH0035	S. Brush holder
1004336800	SBH0008	S. Brush holder
1004336801	SBH0020	S. Brush holder
1004336807	SBH0009	S. Brush holder
1004336809	SBH0020	S. Brush holder
1004336810	SBH0012	S. Brush holder
1004336811	SBH0013	S. Brush holder
1004336813	SBH0020	S. Brush holder
1004336814	SBH0020	S. Brush holder
1004336819	SBH0009	S. Brush holder
1004336820	SBH0020	S. Brush holder
1004336821	SBH0012	S. Brush holder
1004336827	SBH0020	S. Brush holder
1004336831	SBH0012	S. Brush holder
1004336833	SBH0028	S. Brush holder
1004336835	SBH0014	S. Brush holder
1004336837	SBH0007	S. Brush holder
1004336842	SBH0020	S. Brush holder
1004336845	SBH0009	S. Brush holder
1004336847	SBH0007	S. Brush holder
1004336850	SBH0007	S. Brush holder
1004336853	SBH0030	S. Brush holder
1004336859	SBH0007	S. Brush holder
1004336866	SBH0029	S. Brush holder
1004336878	SBH0032	S. Brush holder
1004336879	SBH0033	S. Brush holder
1004336888	SBH0036	S. Brush holder
1004336894	SBH0025	S. Brush holder
1004336896	SBH0033	S. Brush holder
1004336900	SBH0005	S. Brush holder
1004336901	SBH0006	S. Brush holder
1004336902	SBH0007	S. Brush holder
1004336903	SBH0007	S. Brush holder
1004336906	SBH0007	S. Brush holder
1004336907	SBH0007	S. Brush holder
1004336908	SBH0014	S. Brush holder
1004336909	SBH0009	S. Brush holder
1004336911	SBH0013	S. Brush holder
1004336913	SBH0007	S. Brush holder
1004336914	SBH0007	S. Brush holder
1004336915	SBH0011	S. Brush holder
1004336916	SBH0011	S. Brush holder
1004336918	SBH0007	S. Brush holder
1004336923	SBH0013	S. Brush holder
1004336925	SBH0009	S. Brush holder
1004336926	SBH0007	S. Brush holder
1004336931	SBH0009	S. Brush holder
1004336933	SBH0007	S. Brush holder
1004336934	SBH0007	S. Brush holder
1004336936	SBH0007	S. Brush holder
1004336937	SBH0012	S. Brush holder
1004336938	SBH0034	S. Brush holder
1004336940	SBH0022	S. Brush holder
1004336941	SBH0007	S. Brush holder
1004336942	SBH0009	S. Brush holder
1004336946	SBH0014	S. Brush holder
1004336947	SBH0008	S. Brush holder
1004336948	SBH0014	S. Brush holder
1004336949	SBH0009	S. Brush holder
1004336950	SBH0007	S. Brush holder
1004336951	SBH0012	S. Brush holder
1004336952	SBH0034	S. Brush holder
1004336953	SBH0034	S. Brush holder
1004336954	SBH0007	S. Brush holder
1004336955	SBH0009	S. Brush holder
1004336957	SBH0020	S. Brush holder
1004336958	SBH0008	S. Brush holder
1004336960	SBH0007	S. Brush holder
1004336961	SBH0007	S. Brush holder
1004336963	SBH0011	S. Brush holder
1004336964	SBH0020	S. Brush holder
1004336965	SBH0007	S. Brush holder
1004336967	SBH0034	S. Brush holder
1004336968	SBH0007	S. Brush holder
1004336969	SBH0022	S. Brush holder
1004336970	SBH0020	S. Brush holder
1004336975	SBH0012	S. Brush holder
1004336976	SBH0009	S. Brush holder
1004336980	SBH0031	S. Brush holder
1004336981	SBH0009	S. Brush holder
1004336983	SBH0008	S. Brush holder
1004336984	SBH0009	S. Brush holder
1004336989	SBH0020	S. Brush holder
1004336991	SBH0008	S. Brush holder
1004336994	SBH0009	S. Brush holder
1004336997	SBH0009	S. Brush holder
1004336998	SBH0007	S. Brush holder
1004336999	SBH0009	S. Brush holder
1004421020	SP0007	Solenoids parts
1005001055	SF0013	Starter field coil
1005001826	SF0017	Starter field coil
1005001843	SF0017	Starter field coil
1005001904	SF0013	Starter field coil
1005001905	SF0012	Starter field coil
1005001919	SF0013	Starter field coil
1005001942	SF0010	Starter field coil
1005001943	SF0017	Starter field coil
1005001948	SF0017	Starter field coil
1005001949	SF0009	Starter field coil
1005001976	SF0009	Starter field coil
1005001978	SF0012	Starter field coil
1005321306	SG0007	Starter gear
1005821103	SBR0001	Starter bracket
1005821300	SG0001	Starter gear
1005821303	SG0004	Starter gear
1005821306	SG0007	Starter gear
1005821307	SG0001	Starter gear
1005821308	SG0006	Starter gear
1005821312	SG0010	Starter gear
1005821313	SG0011	Starter gear
1005821321	SG0014	Starter gear
1005821333	SG0015	Starter gear
1005821352	SG0006	Starter gear
1005821711	SBR0014	Starter bracket
1005821746	SBR0008	Starter bracket
1005821787	SBR0007	Starter bracket
1005821903	SBR0008	Starter bracket
1005822373	SBR0010	Starter bracket

BOSCH	AS	PRODUCT
1005831167	SBR0008	Starter bracket
1005831169	SBR0007	Starter bracket
1005831322	SBR0020	Starter bracket
1006200006	SG0017	Starter gear
1006200012	SG0016	Starter gear
1006200030	SG0018	Starter gear
1006200041	SG0018	Starter gear
1006200043	SG0020	Starter gear
1006200050	SG0003	Starter gear
1006200117	SG0023	Starter gear
1006200128	SG0020	Starter gear
1006200129	SG0018	Starter gear
1006200183	SG0016	Starter gear
1006200187	SG0017	Starter gear
1006200923	SG0024	Starter gear
1006208280	SD0030	Drive
1006208450	SD0030	Drive
1006209162	SD0002	Drive
1006209236	SD0001	Drive
1006209295	SD0055	Drive
1006209340	SD0001	Drive
1006209400	SD0139	Drive
1006209401	SD0118	Drive
1006209403	SD0139	Drive
1006209404	SD0001	Drive
1006209405	SD0139	Drive
1006209410	SD0001	Drive
1006209411	SD0139	Drive
1006209412	SD0139	Drive
1006209414	SD0001	Drive
1006209416	SD0001	Drive
1006209417	SD0139	Drive
1006209424	SD0002	Drive
1006209425	SD0042	Drive
1006209427	SD0001	Drive
1006209431	SD0002	Drive
1006209436	SD0026	Drive
1006209437	SD0105	Drive
1006209445	SD0118	Drive
1006209447	SD0001	Drive
1006209450	SD0030	Drive
1006209451	SD0031	Drive
1006209462	SD0001	Drive
1006209463	SD0001	Drive
1006209471	SD0001	Drive
1006209482	SD0069	Drive
1006209500	SD0013	Drive
1006209501	SD0022	Drive
1006209502	SD0016	Drive
1006209503	SD0014	Drive
1006209504	SD0014	Drive
1006209506	SD0014	Drive
1006209509	SD0014	Drive
1006209510	SD0023	Drive
1006209513	SD0014	Drive
1006209516	SD0023	Drive
1006209517	SD0022	Drive
1006209519	SD0039	Drive
1006209520	SD0032	Drive
1006209522	SD0040	Drive
1006209523	SD0033	Drive
1006209524	SD0038	Drive
1006209526	SD0014	Drive
1006209528	SD0014	Drive
1006209530	SD0014	Drive
1006209531	SD0014	Drive
1006209532	SD0041	Drive
1006209533	SD0140	Drive
1006209534	SD0052	Drive
1006209536	SD0014	Drive
1006209537	SD0023	Drive
1006209538	SD0044	Drive
1006209539	SD0044	Drive
1006209540	SD0051	Drive
1006209541	SD0043	Drive
1006209542	SD0099	Drive
1006209543	SD0045	Drive
1006209544	SD0045	Drive
1006209545	SD0023	Drive
1006209546	SD0086	Drive
1006209547	SD0052	Drive
1006209548	SD0014	Drive
1006209549	SD0052	Drive
1006209550	SD0099	Drive
1006209551	SD0061	Drive
1006209552	SD0055	Drive
1006209553	SD0087	Drive
1006209554	SD0052	Drive
1006209558	SD0087	Drive
1006209559	SD0052	Drive
1006209560	SD0024	Drive
1006209561	SD0067	Drive
1006209563	SD0014	Drive
1006209564	SD0068	Drive
1006209565	SD0087	Drive
1006209566	SD0023	Drive
1006209568	SD0023	Drive
1006209569	SD0024	Drive
1006209570	SD0014	Drive
1006209571	SD0043	Drive
1006209572	SD0014	Drive
1006209573	SD0014	Drive
1006209576	SD0045	Drive
1006209578	SD0060	Drive
1006209579	SD0058	Drive
1006209581	SD0062	Drive
1006209582	SD0014	Drive
1006209583	SD0087	Drive
1006209584	SD0063	Drive
1006209585	SD0057	Drive
1006209588	SD0081	Drive
1006209591	SD0055	Drive
1006209592	SD0124	Drive
1006209594	SD0055	Drive
1006209596	SD0045	Drive
1006209597	SD0014	Drive
1006209600	SD0063	Drive
1006209603	SD0023	Drive
1006209607	SD0088	Drive
1006209613	SD0078	Drive
1006209618	SD0071	Drive
1006209619	SD0014	Drive
1006209621	SD0066	Drive
1006209622	SD0145	Drive
1006209624	SD0072	Drive
1006209626	SD0077	Drive
1006209628	SD0070	Drive
1006209629	SD0077	Drive
1006209631	SD0097	Drive
1006209633	SD0072	Drive
1006209634	SD0073	Drive
1006209635	SD0097	Drive
1006209636	SD0075	Drive
1006209637	SD0074	Drive
1006209638	SD0071	Drive
1006209641	SD0107	Drive
1006209642	SD0080	Drive
1006209643	SD0075	Drive
1006209645	SD0095	Drive
1006209646	SD0093	Drive
1006209648	SD0066	Drive
1006209649	SD0070	Drive
1006209650	SD0116	Drive
1006209652	SD0076	Drive
1006209653	SD0129	Drive
1006209656	SD0126	Drive
1006209657	SD0091	Drive
1006209660	SD0073	Drive
1006209661	SD0110	Drive
1006209666	SD0148	Drive
1006209667	SD0071	Drive
1006209669	SD0130	Drive
1006209670	SD0088	Drive
1006209671	SD0096	Drive
1006209672	SD0071	Drive
1006209674	SD0127	Drive
1006209675	SD0088	Drive
1006209677	SD0071	Drive
1006209678	SD0097	Drive
1006209680	SD0092	Drive
1006209681	SD0100	Drive
1006209684	SD0014	Drive
1006209685	SD0014	Drive
1006209686	SD0063	Drive
1006209690	SD0071	Drive
1006209691	SD0044	Drive
1006209692	SD0072	Drive
1006209693	SD0014	Drive
1006209694	SD0014	Drive
1006209695	SD0149	Drive
1006209696	SD0072	Drive
1006209699	SD0066	Drive
1006209701	SD0014	Drive
1006209702	SD0014	Drive
1006209703	SD0045	Drive
1006209704	SD0115	Drive
1006209706	SD0072	Drive
1006209707	SD0014	Drive
1006209709	SD0014	Drive
1006209710	SD0045	Drive
1006209711	SD0014	Drive
1006209715	SD0072	Drive
1006209753	SD0131	Drive
1006209755	SD0132	Drive
1006209757	SD0091	Drive
1006209758	SD0070	Drive

BOSCH	AS	PRODUCT
1006209759	SD0075	Drive
1006209762	SD0107	Drive
1006209775	SD0133	Drive
1006209777	SD0072	Drive
1006209779	SD0073	Drive
1006209781	SD0107	Drive
1006209783	SD0132	Drive
1006209784	SD0134	Drive
1006209787	SD0071	Drive
1006209791	SD0148	Drive
1006209792	SD0073	Drive
1006209793	SD0136	Drive
1006209794	SD0156	Drive
1006209796	SD0135	Drive
1006209801	SD0136	Drive
1006209802	SD0095	Drive
1006209804	SD0137	Drive
1006209805	SD0138	Drive
1006209806	SD0155	Drive
1006209807	SD0136	Drive
1006209810	SD0156	Drive
1006209812	SD0120	Drive
1006209813	SD0150	Drive
1006209814	SD0138	Drive
1006209818	SD0146	Drive
1006209820	SD0156	Drive
1006209824	SD0144	Drive
1006209825	SD0158	Drive
1006209828	SD0147	Drive
1006209845	SD0147	Drive
1006209850	SD0116	Drive
1006209862	SD0159	Drive
1006209905	SD0023	Drive
1006209906	SD0014	Drive
1006209907	SD0023	Drive
1006209908	SD0024	Drive
1006209910	SD0087	Drive
1006209911	SD0055	Drive
1006209912	SD0055	Drive
1006209914	SD0069	Drive
1006209916	SD0057	Drive
1006209917	SD0058	Drive
1006209918	SD0045	Drive
1006209919	SD0045	Drive
1006209921	SD0045	Drive
1006209922	SD0087	Drive
1006209923	SD0060	Drive
1006209929	SD0077	Drive
1006209932	SD0081	Drive
1006209936	SD0148	Drive
1006209937	SD0071	Drive
1006209939	SD0014	Drive
1006209941	SD0124	Drive
1006209943	SD0100	Drive
1006209944	SD0072	Drive
1006209946	SD0075	Drive
1006209949	SD0132	Drive
1006209950	SD0095	Drive
1006209958	SD0138	Drive
1006209960	SD0132	Drive
1006209964	SD0146	Drive
1006210146	SD0144	Drive
1006384642	SD0038	Drive
1007010018	SA0024	Starter armature
1007010021	SA0021	Starter armature
1007010077	BSX175-176	Sta. Brush set
1007010095	SG0016	Starter gear
1007010105	SD0091	Drive
1007014105	BSX149	Sta. Brush set
1007014107	BSX34	Sta. Brush set
1007014119	BSX76	Sta. Brush set
1007014121	BSX76	Sta. Brush set
1007014137	BSX146	Sta. Brush set
1007014138	BSX140	Sta. Brush set
1007014139	BSX149	Sta. Brush set
1007014140	BSX151	Sta. Brush set
1007014141	BSX149	Sta. Brush set
1007014143	BSX151	Sta. Brush set
1007014144	BSX140	Sta. Brush set
1007014145	BSX149	Sta. Brush set
1007141143	BSX151	Sta. Brush set
1007336957	SBH0020	S. Brush holder
1104336702	SBH0029	S. Brush holder
1120591060	ABEC0003	Bearing cover
1120591075	ABEC0005	Bearing cover
1120591076	ABEC0002	Bearing cover
1120591082	ABEC0006	Bearing cover
1120591102	ABEC0004	Bearing cover
1120591103	ABEC0002	Bearing cover
1120591116	ABEC0004	Bearing cover
1120591506	AFP9002	Cover for pulley
1120591509	ABEC0004	Bearing cover
1120591511	ABEC0004	Bearing cover
1120900002	ABE9008	Bearing
1120900008	ABE9041(NSK)	Bearing
1120900010	ABE9041(NSK)	Bearing
1120900012	ABE9008	Bearing
1120905001	ABE9006	Bearing
1120905002	ABE9002	Bearing
1120905003	ABE9008	Bearing
1120905004	ABE9006	Bearing
1120905005	ABE9025	Bearing
1120905006	ABE9007	Bearing
1120905008	ABE9002	Bearing
1120905012	ABE9018	Bearing
1120905013	ABE9004	Bearing
1120905017	ABE9018	Bearing
1120905021	ABE9006	Bearing
1120905022	ABE9002	Bearing
1120905023	ABE9002	Bearing
1120905024	ABE9007	Bearing
1120905025	ABE9002	Bearing
1120905026	ABE9002	Bearing
1120905028	ABE9002	Bearing
1120905029	ABE9002	Bearing
1120905030	ABE9002	Bearing
1120905031	ABE9007	Bearing
1120905032	ABE9002	Bearing
1120905033	ABE9002	Bearing
1120905036	ABE9018	Bearing
1120905037	ABE9006	Bearing
1120905038	ABE9002	Bearing
1120905039	ABE9006	Bearing
1120905040	ABE9002	Bearing
1120905041	ABE9004	Bearing
1120905042	ABE9002	Bearing
1120905044	ABE9004	Bearing
1120905045	ABE9004	Bearing
1120905046	ABE9006	Bearing
1120905047	ABE9006	Bearing
1120905048	ABE9018	Bearing
1120905049	ABE9018	Bearing
1120905050	ABE9004	Bearing
1120905051	ABE9004	Bearing
1120905052	ABE9006	Bearing
1120905054	ABE9018	Bearing
1120905055	ABE9018	Bearing
1120905057	ABE9002	Bearing
1120905058	ABE9002	Bearing
1120905059	ABE9002	Bearing
1120905060	ABE9004	Bearing
1120905061	ABE9006	Bearing
1120905062	ABE9018	Bearing
1120905063	ABE9004	Bearing
1120905064	ABE9004	Bearing
1120905066	ABE9004	Bearing
1120905068	ABE9006	Bearing
1120905070	ABE9018	Bearing
1120905074	ABE9006	Bearing
1120905075	ABE9006	Bearing
1120905076	ABE9006	Bearing
1120905079	ABE9006	Bearing
1120905083	ABE9004	Bearing
1120905084	ABE9018	Bearing
1120905086	ABE9018	Bearing
1120905087	ABE9006	Bearing
1120905089	ABE9018	Bearing
1120905090	ABE9004	Bearing
1120905091	ABE9004	Bearing
1120905092	ABE9004	Bearing
1120905093	ABE9018	Bearing
1120905094	ABE9018	Bearing
1120905095	ABE9018	Bearing
1120905096	ABE9018	Bearing
1120905097	ABE9044	Bearing
1120905102	ABE9002	Bearing
1120905103	ABE9025	Bearing
1120905105	ABE9007	Bearing
1120905107	ABE9007	Bearing
1120905271	ABE9004	Bearing
1120905273	ABE9004	Bearing
1120905282	ABE9007	Bearing
1120905384	ABE9006	Bearing
1120905501	ABE9004	Bearing
1120905506	ABE9018	Bearing
1120905514	ABE9006	Bearing
1120905516	ABE9006	Bearing
1120905518	ABE9006	Bearing
1120905520	ABE9018	Bearing
1120905525	ABE9004	Bearing
1120905531	ABE9018	Bearing
1120905533	ABE9006	Bearing
1120905534	ABE9004	Bearing
1124034167	AR0004	Rotor
1124034183	AR0004	Rotor
1124034203	AR0004	Rotor

BOSCH	AS	PRODUCT
1124034304	AR0004	Rotor
1124034307	AR0004	Rotor
1124034316	AR0004	Rotor
1124034319	AR0004	Rotor
1124034320	AR0004	Rotor
1124034322	AR0004	Rotor
1124034343	AR0007	Rotor
1124034346	AR0004	Rotor
1124034348	AR0007	Rotor
1124034353	AR0007	Rotor
1124034357	AR0007	Rotor
1124034361	AR0004	Rotor
1124034363	AR0004	Rotor
1124034365	AR0004	Rotor
1124034366	AR0004	Rotor
1124034370	AR0004	Rotor
1124034403	AR0008	Rotor
1124034407	AR0005	Rotor
1124034414	AR0008	Rotor
1124034417	AR0005	Rotor
1124034433	AR0005	Rotor
1124034441	AR0006	Rotor
1124034444	AR0008	Rotor
1124034452	AR0009	Rotor
1124034454	AR0005	Rotor
1124034467	AR0009	Rotor
1124034468	AR0006	Rotor
1124034470	AR0008	Rotor
1124034477	AR0008	Rotor
1124034479	AR0005	Rotor
1124034483	AR0005	Rotor
1124034485	AR0005	Rotor
1124034506	AR0004	Rotor
1124034600	AR0004	Rotor
1124034621	AR0004	Rotor
1124034638	AR0004	Rotor
1124034639	AR0004	Rotor
1124034651	AR0007	Rotor
1124034652	AR0007	Rotor
1124034691	AR0004	Rotor
1124034782	AR0004	Rotor
1124034913	AR0005	Rotor
1124034928	AR0009	Rotor
1124034929	AR0009	Rotor
1124034930	AR0005	Rotor
1124034931	AR0008	Rotor
1124034932	AR0008	Rotor
1124034934	AR0005	Rotor
1124034946	AR0005	Rotor
1124034948	AR0009	Rotor
1124034958	AR0005	Rotor
1124035021	AR0003	Rotor
1124035026	AR0003	Rotor
1124035057	AR0003	Rotor
1124035059	AR0003	Rotor
1124035077	AR0001	Rotor
1124035079	AR0003	Rotor
1124035116	AR0002	Rotor
1124035168	AR0001	Rotor
1124035177	AR0003	Rotor
1124035178	AR0003	Rotor
1124035226	AR0002	Rotor
1124035235	AR0003	Rotor
1124035237	AR0003	Rotor
1124035258	AR0001	Rotor
1124035401	AR0006	Rotor
1124035441	AR0006	Rotor
1124035444	AR0006	Rotor
1124035449	AR0006	Rotor
1124035451	AR0006	Rotor
1124035468	AR0006	Rotor
1124035483	AR0006	Rotor
1124035497	AR0006	Rotor
1124035504	AR0006	Rotor
1124035512	AR0006	Rotor
1124035530	AR0011	Rotor
1124035543	AR0011	Rotor
1124045028	AS0006	Stator
1124045031	AS0002	Stator
1124045032	AS0002	Stator
1124045033	AS0002	Stator
1124045038	AS0002	Stator
1124045119	AS0011	Stator
1124045132	AS0003	Stator
1124045231	AS0007	Stator
1124229029	AS0002	Stator
1124303001	ASL9006	Slip ring
1124303004	ASL9006	Slip ring
1124303005	ASL9006	Slip ring
1124303010	ASL9006	Slip ring
1124303013	ASL9006	Slip ring
1124303015	ASL9006	Slip ring
1124303017	ASL9006	Slip ring
1124303022	ASL9006	Slip ring
1124303024	ASL9006	Slip ring
1124303038	ASL9006	Slip ring
1124304007	ASL9005	Slip ring
1124304011	ASL9005	Slip ring
1124304015	ASL9006	Slip ring
1124304018	ASL9020	Slip ring
1124304022	ASL9005	Slip ring
1125045000	AS0002	Stator
1125045007	AS0005	Stator
1125045012	AS0002	Stator
1125045016	AS0002	Stator
1125045023	AS0002	Stator
1125045027	AS0002	Stator
1125045028	AS0006	Stator
1125045029	AS0006	Stator
1125045030	AS0002	Stator
1125045031	AS0002	Stator
1125045032	AS0002	Stator
1125045033	AS0002	Stator
1125045036	AS0002	Stator
1125045038	AS0002	Stator
1125045041	AS0002	Stator
1125045042	AS0002	Stator
1125045045	AS0006	Stator
1125045046	AS0002	Stator
1125045052	AS0002	Stator
1125045053	AS0004	Stator
1125045057	AS0006	Stator
1125045062	AS0002	Stator
1125045081	AS0004	Stator
1125045102	AS0011	Stator
1125045105	AS0003	Stator
1125045107	AS0003	Stator
1125045114	AS0011	Stator
1125045119	AS0011	Stator
1125045122	AS0011	Stator
1125045128	AS0003	Stator
1125045130	AS0011	Stator
1125045132	AS0003	Stator
1125045133	AS0011	Stator
1125045137	AS0011	Stator
1125045138	AS0011	Stator
1125045140	AS0011	Stator
1125045152	AS0001	Stator
1125045165	AS0001	Stator
1125045167	AS0001	Stator
1125045178	AS0003	Stator
1125045197	AS0001	Stator
1125045203	AS0003	Stator
1125045209	AS0006	Stator
1125045212	AS0007	Stator
1125045216	AS0008	Stator
1125045226	AS0008	Stator
1125045227	AS0008	Stator
1125045229	AS0012	Stator
1125045233	AS0007	Stator
1125045234	AS0007	Stator
1125045507	AS0012	Stator
1125045532	AS0008	Stator
1125045533	AS0008	Stator
1125045537	AS0007	Stator
1125045538	AS0007	Stator
1125045540	AS0012	Stator
1125045542	AS0012	Stator
1125045606	AS0012	Stator
1125045612	AS0012	Stator
1125047004	AS0005	Stator
1125047005	AS0005	Stator
1125500058	APC0003	Plastic cover
1125500086	APC0003	Plastic cover
1125500108	APC0004	Plastic cover
1125500116	APC0003	Plastic cover
1125500117	APC0003	Plastic cover
1125500128	APC0004	Plastic cover
1125500190	APC0003	Plastic cover
1125500518	APC0001	Plastic cover
1125500519	APC0005	Plastic cover
1125500583	APC0001	Plastic cover
1125500603	APC0004	Plastic cover
1125500623	APC0003	Plastic cover
1125500635	APC0001	Plastic cover
1125500647	APC0005	Plastic cover
1125825098	ABR0006	Bracket
1125825279	ABR0006	Bracket
1125825358	ABR0005	Bracket
1125827013	ABR0004	Bracket
1125885019	ABR0001	Bracket
1125885023	ABR0001	Bracket
1125885025	ABR0001	Bracket
1125885041	ABR0001	Bracket
1125885061	ABR0001	Bracket
1125885143	ABR0001	Bracket

BOSCH	AS	PRODUCT
1125885154	ABR0001	Bracket
1125885155	ABR0001	Bracket
1125885157	ABR0001	Bracket
1125885230	ABR0002	Bracket
1125887013	ABR0003	Bracket
1126301557	AFP0001	FW pulley
1126500524	AP0011	Pulley
1126500934	AP0011	Pulley
1126500945	AP0011	Pulley
1126500984	AP0002	Pulley
1126600031	AP0003	Pulley
1126600154	AP0001	Pulley
1126600218	AP0019	Pulley
1126600222	AP0001	Pulley
1126600262	AP0001	Pulley
1126600265	AP0001	Pulley
1126600282	AP0019	Pulley
1126600308	AP0001	Pulley
1126600309	AP0001	Pulley
1126600345	AP0001	Pulley
1126600348	AP0001	Pulley
1126600488	AP0001	Pulley
1126600517	AP0003	Pulley
1126600522	AP0019	Pulley
1126600544	AP0001	Pulley
1126600567	AP0002	Pulley
1126600568	AP0002	Pulley
1126600569	AP0003	Pulley
1126600570	AP0004	Pulley
1126600625	AP0005	Pulley
1126600639	AP0019	Pulley
1126600735	AP0002	Pulley
1126600861	AP0005	Pulley
1126600934	AP0011	Pulley
1126600940	AP0018	Pulley
1126600950	AP0011	Pulley
1126600976	AP0018	Pulley
1126600984	AP0002	Pulley
1126601034	AP0003	Pulley
1126601038	AP0004	Pulley
1126601039	AP0002	Pulley
1126601040	AP0002	Pulley
1126601102	AFP0043	FW pulley
1126601513	AP0020	Pulley
1126601520	AP0020	Pulley
1126601524	AP0011	Pulley
1126601529	AP0008	Pulley
1126601539	AP0013	Pulley
1126601544	AP0002	Pulley
1126601548	AP0002	Pulley
1126601551	AP0003	Pulley
1126601555	AP0018	Pulley
1126601556	AFP0001	FW pulley
1126601557	AFP0001	FW pulley
1126601559	AFP0004	FW pulley
1126601565	AFP0005	FW pulley
1126601566	AFP0006	FW pulley
1126601567	AFP0019	FW pulley
1126601568	AFP0003	FW pulley
1126601572	AFP0002	FW pulley
1126601580	AFP0030	FW pulley
1126601587	AP0013	Pulley
1126601588	AFP0040	FW pulley
1126601593	AFP0017	FW pulley
1126601597	AFP0008	FW pulley
1127011095	ARC0007	Rectifier
1127011096	ARC0007	Rectifier
1127011097	ARC0007	Rectifier
1127011098	ARC0006	Rectifier
1127011101	ARC0006	Rectifier
1127011103	ARC0007	Rectifier
1127011112	ARC0003	Rectifier
1127011113	ARC0003	Rectifier
1127011114	ARC0003	Rectifier
1127011115	ARC0003	Rectifier
1127011116	ARC0002	Rectifier
1127011117	ARC0004	Rectifier
1127011118	ARC0004	Rectifier
1127011120	ARC0004	Rectifier
1127011121	ARC0004	Rectifier
1127011123	ARC0004	Rectifier
1127011124	ARC0004	Rectifier
1127011125	ARC0004	Rectifier
1127011127	ARC0004	Rectifier
1127011130	ARC0003	Rectifier
1127011131	ARC0001	Rectifier
1127011132	ARC0004	Rectifier
1127011134	ARC0041	Rectifier
1127011135	ARC0003	Rectifier
1127011139	ARC0037	Rectifier
1127011140	ARC0004	Rectifier
1127011157	ARC0022	Rectifier
1127011175	ARE0006	Regulator
1127011614	ARC0002	Rectifier
1127011844	AFP0004	FW pulley
1127011845	AFP0004	FW pulley
1127011846	AFP0005	FW pulley
1127011861	AFP0032	FW pulley
1127014001	BX185	Alt. Brush set
1127014008	BX185	Alt. Brush set
1127014009	BX182	Alt. Brush set
1127014011	BX185	Alt. Brush set
1127014012	BX182	Alt. Brush set
1127014016	BX201	Alt. Brush set
1127014017	BX202	Alt. Brush set
1127014018	BX204	Alt. Brush set
1127014022	BX202	Alt. Brush set
1127014023	BX204	Alt. Brush set
1127014025	BX204	Alt. Brush set
1127014028	BX213	Alt. Brush set
1127014030	BX202	Alt. Brush set
1127311175	ARE0006	Regulator
1127319005	ARC0051	Rectifier
1127319009	ARC0031	Rectifier
1127319031	ARC0041	Rectifier
1127319101	ARC0032	Rectifier
1127319113	ARC0062	Rectifier
1127319501	ARC0046	Rectifier
1127319510	ARC0029	Rectifier
1127319522	ARC0042	Rectifier
1127319538	ARC0046	Rectifier
1127319552	ARC0030	Rectifier
1127319568	ARC0040	Rectifier
1127319574	ARC0046	Rectifier
1127319578	ARC0046	Rectifier
1127319584	ARC0047	Rectifier
1127319593	ARC0029	Rectifier
1127319601	ARC0051	Rectifier
1127319607	ARC0042	Rectifier
1127319617	ARC0031	Rectifier
1127319623	ARC0031	Rectifier
1127319637	ARC0041	Rectifier
1127319639	ARC0041	Rectifier
1127319690	ARC0056	Rectifier
1127319694	ARC0042	Rectifier
1127319724	ARC0040	Rectifier
1127319728	ARC0030	Rectifier
1127319729	ARC0029	Rectifier
1127319730	ARC0029	Rectifier
1127319732	ARC0040	Rectifier
1127319736	ARC0046	Rectifier
1127319751	ARC0046	Rectifier
1127319752	ARC0046	Rectifier
1127319766	ARC0051	Rectifier
1127319794	ARC0049	Rectifier
1127320025	ARD9005	Diode
1127320037	ARD9005	Diode
1127320043	ARD9005	Diode
1127320046	ARD9005	Diode
1127320081	ARD9005	Diode
1127320082	ARD9005	Diode
1127320101	ARC0003	Rectifier
1127320103	ARC0003	Rectifier
1127320105	ARC0003	Rectifier
1127320108	ARC0003	Rectifier
1127320109	ARC0004	Rectifier
1127320110	ARC0004	Rectifier
1127320115	ARC0061	Rectifier
1127320116	ARC0061	Rectifier
1127320119	ARC0003	Rectifier
1127320120	ARC0003	Rectifier
1127320125	ARC0003	Rectifier
1127320128	ARC0004	Rectifier
1127320130	ARC0003	Rectifier
1127320134	ARC0003	Rectifier
1127320136	ARC0003	Rectifier
1127320137	ARC0045	Rectifier
1127320138	ARC0003	Rectifier
1127320139	ARC0037	Rectifier
1127320140	ARC0003	Rectifier
1127320141	ARC0061	Rectifier
1127320142	ARC0061	Rectifier
1127320143	ARC0003	Rectifier
1127320144	ARC0003	Rectifier
1127320145	ARC0003	Rectifier
1127320146	ARC0061	Rectifier
1127320147	ARC0007	Rectifier
1127320149	ARC0004	Rectifier
1127320150	ARC0004	Rectifier
1127320152	ARC0045	Rectifier
1127320155	ARC0003	Rectifier
1127320157	ARC0003	Rectifier
1127320163	ARC0003	Rectifier
1127320170	ARC0004	Rectifier
1127320171	ARC0004	Rectifier
1127320174	ARC0003	Rectifier

BOSCH	AS	PRODUCT
1127320175	ARC0003	Rectifier
1127320176	ARC0003	Rectifier
1127320178	ARC0003	Rectifier
1127320181	ARC0003	Rectifier
1127320183	ARC0003	Rectifier
1127320184	ARC0004	Rectifier
1127320185	ARC0003	Rectifier
1127320187	ARC0004	Rectifier
1127320188	ARC0004	Rectifier
1127320189	ARC0004	Rectifier
1127320192	ARC0045	Rectifier
1127320195	ARC0004	Rectifier
1127320196	ARC0004	Rectifier
1127320300	ARC0004	Rectifier
1127320301	ARC0004	Rectifier
1127320302	ARC0004	Rectifier
1127320303	ARC0004	Rectifier
1127320304	ARC0004	Rectifier
1127320305	ARC0004	Rectifier
1127320306	ARC0004	Rectifier
1127320307	ARC0003	Rectifier
1127320308	ARC0004	Rectifier
1127320309	ARC0004	Rectifier
1127320310	ARC0003	Rectifier
1127320311	ARC0003	Rectifier
1127320312	ARC0003	Rectifier
1127320313	ARC0004	Rectifier
1127320314	ARC0003	Rectifier
1127320316	ARC0061	Rectifier
1127320317	ARC0061	Rectifier
1127320318	ARC0004	Rectifier
1127320319	ARC0045	Rectifier
1127320320	ARC0004	Rectifier
1127320322	ARC0003	Rectifier
1127320323	ARC0003	Rectifier
1127320325	ARC0004	Rectifier
1127320326	ARC0004	Rectifier
1127320329	ARC0003	Rectifier
1127320331	ARC0007	Rectifier
1127320332	ARC0045	Rectifier
1127320336	ARC0004	Rectifier
1127320337	ARC0007	Rectifier
1127320339	ARC0006	Rectifier
1127320340	ARC0004	Rectifier
1127320341	ARC0003	Rectifier
1127320344	ARC0006	Rectifier
1127320345	ARC0061	Rectifier
1127320346	ARC0004	Rectifier
1127320351	ARC0003	Rectifier
1127320355	ARC0003	Rectifier
1127320356	ARC0007	Rectifier
1127320358	ARC0007	Rectifier
1127320361	ARC0016	Rectifier
1127320363	ARC0006	Rectifier
1127320364	ARC0007	Rectifier
1127320365	ARC0007	Rectifier
1127320366	ARC0006	Rectifier
1127320367	ARC0006	Rectifier
1127320368	ARC0007	Rectifier
1127320369	ARC0022	Rectifier
1127320372	ARC0037	Rectifier
1127320375	ARC0007	Rectifier
1127320377	ARC0003	Rectifier
1127320378	ARC0003	Rectifier
1127320380	ARC0003	Rectifier
1127320381	ARC0003	Rectifier
1127320382	ARC0003	Rectifier
1127320384	ARC0004	Rectifier
1127320390	ARC0017	Rectifier
1127320392	ARC0003	Rectifier
1127320395	ARC0017	Rectifier
1127320398	ARC0007	Rectifier
1127320500	ARC0004	Rectifier
1127320501	ARC0004	Rectifier
1127320502	ARC0003	Rectifier
1127320506	ARC0002	Rectifier
1127320508	ARC0004	Rectifier
1127320509	ARC0004	Rectifier
1127320510	ARC0004	Rectifier
1127320511	ARC0004	Rectifier
1127320512	ARC0003	Rectifier
1127320513	ARC0003	Rectifier
1127320528	ARC0003	Rectifier
1127320529	ARC0004	Rectifier
1127320536	ARC0003	Rectifier
1127320540	ARC0007	Rectifier
1127320541	ARC0007	Rectifier
1127320545	ARC0006	Rectifier
1127320546	ARC0006	Rectifier
1127320547	ARC0038	Rectifier
1127320550	ARC0038	Rectifier
1127320551	ARC0022	Rectifier
1127320554	ARC0003	Rectifier
1127320562	ARC0010	Rectifier
1127320563	ARC0003	Rectifier
1127320565	ARC0022	Rectifier
1127320569	ARC0061	Rectifier
1127320571	ARC0038	Rectifier
1127320572	ARC0003	Rectifier
1127320573	ARC0004	Rectifier
1127320574	ARC0004	Rectifier
1127320580	ARC0037	Rectifier
1127320581	ARC0022	Rectifier
1127320583	ARC0004	Rectifier
1127320584	ARC0022	Rectifier
1127320590	ARC0024	Rectifier
1127320591	ARC0035	Rectifier
1127320594	ARC0013	Rectifier
1127320595	ARC0022	Rectifier
1127320598	ARC0007	Rectifier
1127320599	ARC0006	Rectifier
1127320601	ARC0009	Rectifier
1127320602	ARC0035	Rectifier
1127320604	ARC0007	Rectifier
1127320606	ARC0022	Rectifier
1127320607	ARC0022	Rectifier
1127320608	ARC0022	Rectifier
1127320610	ARC0003	Rectifier
1127320611	ARC0003	Rectifier
1127320612	ARC0003	Rectifier
1127320613	ARC0003	Rectifier
1127320614	ARC0002	Rectifier
1127320619	ARC0004	Rectifier
1127320620	ARC0004	Rectifier
1127320622	ARC0004	Rectifier
1127320624	ARC0004	Rectifier
1127320630	ARC0003	Rectifier
1127320633	ARC0004	Rectifier
1127320634	ARC0004	Rectifier
1127320637	ARC0003	Rectifier
1127320639	ARC0041	Rectifier
1127320641	ARC0003	Rectifier
1127320642	ARC0003	Rectifier
1127320644	ARC0003	Rectifier
1127320646	ARC0004	Rectifier
1127320647	ARC0003	Rectifier
1127320648	ARC0002	Rectifier
1127320649	ARC0004	Rectifier
1127320651	ARC0012	Rectifier
1127320652	ARC0037	Rectifier
1127320653	ARC0017	Rectifier
1127320657	ARC0004	Rectifier
1127320661	ARC0009	Rectifier
1127320662	ARC0009	Rectifier
1127320664	ARC0005	Rectifier
1127320665	ARC0005	Rectifier
1127320666	ARC0005	Rectifier
1127320667	ARC0062	Rectifier
1127320668	ARC0010	Rectifier
1127320677	ARC0012	Rectifier
1127320681	ARC0022	Rectifier
1127320686	ARC0004	Rectifier
1127320691	ARC0009	Rectifier
1127320695	ARC0009	Rectifier
1127320700	ARC0019	Rectifier
1127320701	ARC0018	Rectifier
1127320702	ARC0022	Rectifier
1127320705	ARC0021	Rectifier
1127320706	ARC0020	Rectifier
1127320707	ARC0020	Rectifier
1127320708	ARC0023	Rectifier
1127320709	ARC0022	Rectifier
1127320710	ARC0022	Rectifier
1127320712	ARC0026	Rectifier
1127320713	ARC0027	Rectifier
1127320714	ARC0028	Rectifier
1127320715	ARC0021	Rectifier
1127320718	ARC0015	Rectifier
1127320719	ARC0015	Rectifier
1127320720	ARC0028	Rectifier
1127320722	ARC0022	Rectifier
1127320723	ARC0021	Rectifier
1127320727	ARC0028	Rectifier
1127320728	ARC0021	Rectifier
1127320730	ARC0019	Rectifier
1127320731	ARC0023	Rectifier
1127320732	ARC0021	Rectifier
1127320735	ARC0026	Rectifier
1127320738	ARC0022	Rectifier
1127320739	ARC0021	Rectifier
1127320741	ARC0028	Rectifier
1127320742	ARC0023	Rectifier
1127320745	ARC0022	Rectifier
1127320749	ARC0021	Rectifier
1127320750	ARC0050	Rectifier
1127320753	ARC0050	Rectifier

BOSCH	AS	PRODUCT
1127320807	ARC0029	Rectifier
1127320834	ARC0041	Rectifier
1127320844	ARC0029	Rectifier
1127320852	ARC0030	Rectifier
1127320860	ARC0056	Rectifier
1127320862	ARC0031	Rectifier
1127320864	ARC0029	Rectifier
1127320870	ARC0047	Rectifier
1127320882	ARC0031	Rectifier
1127320902	ARC0028	Rectifier
1127320904	ARC0032	Rectifier
1127320908	ARC0022	Rectifier
1127320909	ARC0008	Rectifier
1127320911	ARC0028	Rectifier
1127320914	ARC0063	Rectifier
1127320924	ARC0035	Rectifier
1127320928	ARC0017	Rectifier
1127320934	ARC0005	Rectifier
1127320945	ARC0005	Rectifier
1127320946	ARC0017	Rectifier
1127320951	ARC0007	Rectifier
1127320954	ARC0034	Rectifier
1127320955	ARC0035	Rectifier
1127320956	ARC0035	Rectifier
1127320959	ARC0016	Rectifier
1127320961	ARC0017	Rectifier
1127320968	ARC0032	Rectifier
1127320969	ARC0017	Rectifier
1127320970	ARC0035	Rectifier
1127320971	ARC0035	Rectifier
1127320973	ARC0038	Rectifier
1127320976	ARC0024	Rectifier
1127320977	ARC0024	Rectifier
1127320980	ARC0035	Rectifier
1127320981	ARC0035	Rectifier
1127320983	ARC0035	Rectifier
1127320989	ARC0035	Rectifier
1127320990	ARC0035	Rectifier
1127320992	ARC0008	Rectifier
1127320994	ARC0032	Rectifier
1127320995	ARC0017	Rectifier
1127320996	ARC0007	Rectifier
1137010025	IM0001	Ignition Module
1187010000	SRS0003	Repair set
1197311000	ARE0001	Regulator
1197311001	ARE0001	Regulator
1197311002	ARE0001	Regulator
1197311003	ARE0003	Regulator
1197311004	ARE0002	Regulator
1197311005	ARE0002	Regulator
1197311006	ARE0002	Regulator
1197311007	ARE0003	Regulator
1197311008	ARE0003	Regulator
1197311009	ARE0003	Regulator
1197311010	ARE0002	Regulator
1197311011	ARE0002	Regulator
1197311012	ARE0002	Regulator
1197311013	ARE0002	Regulator
1197311018	ARE0004	Regulator
1197311021	ARE0002	Regulator
1197311022	ARE0003	Regulator
1197311023	ARE0003	Regulator
1197311024	ARE0047	Regulator
1197311026	ARE0014	Regulator
1197311027	ARE0014	Regulator
1197311028	ARE0014	Regulator
1197311029	ARE0021	Regulator
1197311030	ARE0021	Regulator
1197311031	ARE0021	Regulator
1197311032	ARE0025	Regulator
1197311034	ARE0021	Regulator
1197311035	ARE0003	Regulator
1197311037	ARE0014	Regulator
1197311038	ARE0014	Regulator
1197311039	ARE0004	Regulator
1197311040	ARE0014	Regulator
1197311041	ARE0014	Regulator
1197311043	ARE0021	Regulator
1197311045	ARE0021	Regulator
1197311047	ARE0031	Regulator
1197311048	ARE0047	Regulator
1197311050	ARE0003	Regulator
1197311090	ARE0001	Regulator
1197311175	ARE0006	Regulator
1197311211	ARE0007	Regulator
1197311212	ARE0006	Regulator
1197311213	ARE0007	Regulator
1197311214	ARE0006	Regulator
1197311217	ARE0007	Regulator
1197311219	ARE0007	Regulator
1197311220	ARE0006	Regulator
1197311221	ARE0006	Regulator
1197311223	ARE0006	Regulator
1197311224	ARE0006	Regulator
1197311225	ARE0006	Regulator
1197311227	ARE0006	Regulator
1197311228	ARE0006	Regulator
1197311229	ARE0006	Regulator
1197311233	ARE0006	Regulator
1197311235	ARE0006	Regulator
1197311236	ARE0006	Regulator
1197311237	ARE0006	Regulator
1197311238	ARE0006	Regulator
1197311240	ARE0017	Regulator
1197311241	ARE0006	Regulator
1197311242	ARE0007	Regulator
1197311277	ARE0006	Regulator
1197311300	ARE0005	Regulator
1197311301	ARE0005	Regulator
1197311304	ARE0022	Regulator
1197311305	ARE0005	Regulator
1197311306	ARE0005	Regulator
1197311307	ARE0005	Regulator
1197311308	ARE0024	Regulator
1197311309	ARE0023	Regulator
1197311310	ARE0026	Regulator
1197311312	ARE0024	Regulator
1197311313	ARE0026	Regulator
1197311314	ARE0022	Regulator
1197311315	ARE0032	Regulator
1197311317	ARE0015	Regulator
1197311318	ARE0005	Regulator
1197311319	ARE0035	Regulator
1197311320	ARE0035	Regulator
1197311327	ARE0024	Regulator
1197311500	ARE0011	Regulator
1197311506	ARE0010	Regulator
1197311510	ARE0062	Regulator
1197311511	ARE0039	Regulator
1197311512	ARE0017	Regulator
1197311516	ARE0010	Regulator
1197311517	ARE0017	Regulator
1197311518	ARE0046	Regulator
1197311519	ARE0006	Regulator
1197311520	ARE0046	Regulator
1197311522	ARE0006	Regulator
1197311523	ARE0011	Regulator
1197311528	ARE0006	Regulator
1197311530	ARE0011	Regulator
1197311531	ARE0011	Regulator
1197311533	ARE0007	Regulator
1197311536	ARE0010	Regulator
1197311541	ARE0007	Regulator
1197311543	ARE0053	Regulator
1197311545	ARE0010	Regulator
1197311548	ARE0011	Regulator
1197311550	ARE0017	Regulator
1197311551	ARE0017	Regulator
1197311552	ARE0006	Regulator
1197311553	ARE0017	Regulator
1197311555	ARE0046	Regulator
1197311556	ARE0007	Regulator
1197311557	ARE0010	Regulator
1197311558	ARE0056	Regulator
1197311800	ARE0003	Regulator
1227022017	IM0001	Ignition Module
1227022018	IM0001	Ignition Module
1227022031	IM0001	Ignition Module
1227030030	IM0003	Ignition Module
1227320116	ARC0061	Rectifier
1237010028	IM0001	Ignition Module
1237010029	IM0001	Ignition Module
1237010031	IM0001	Ignition Module
1237010038	IM0001	Ignition Module
1330516062	SP0002	Solenoids parts
1330516225	SP0006	Solenoids parts
1330516712	SP0003	Solenoids parts
1331303613	SS0063	Starter solenoid
1337210726	SS0022	Starter solenoid
1337210728	SS0022	Starter solenoid
1900900303	ABE9003	Bearing
1900900314	ABE9003	Bearing
1900905141	ABE9034	Bearing
1900905162	ABE9020	Bearing
1900905163	ABE9021	Bearing
1900905202	ABE9002	Bearing
1900905203	ABE9004	Bearing
1900905209	ABE9004	Bearing
1900905230	ABE9002	Bearing
1900905232	ABE9002	Bearing
1900905269	ABE9003	Bearing
1900905271	ABE9004	Bearing
1900905274	ABE9007	Bearing
1900905275	ABE9002	Bearing
1900905276	ABE9001	Bearing
1900905281	ABE9004	Bearing

BOSCH	AS	PRODUCT
1900905282	ABE9007	Bearing
1900905304	ABE9006	Bearing
1900905375	ABE9008	Bearing
1900905376	ABE9006	Bearing
1900905378	ABE9006	Bearing
1900905379	ABE9006	Bearing
1900905382	ABE9006	Bearing
1900910024	ABE9033	Bearing
1987010000	SRS0003	Repair set
2000301000	SBU9004	Bushing
2000301013	SBU9035	Bushing
2000301015	SBU9005	Bushing
2000301016	SBU9015	Bushing
2000301019	SBU9007	Bushing
2000301026	SBU9011	Bushing
2000301036	SBU9009	Bushing
2000301041	SBU9012	Bushing
2000301043	SBU9010	Bushing
2000301045	SBU9012	Bushing
2000301047	SBU9010	Bushing
2000301056	SBU9016	Bushing
2000301128	SBU9035	Bushing
2000905000	ABE9003	Bearing
2000910005	ABE9009	Bearing
2001933056	SA0021	Starter armature
2001933148	SL0002	Levers
2001933149	SL0002	Levers
2003162001	SD0104	Drive
2003162005	SD0104	Drive
2003162006	SD0104	Drive
2003162016	SD0104	Drive
2004002032	SA0011	Starter armature
2004004003	SA0017	Starter armature
2004004005	SA0017	Starter armature
2004004006	SA0017	Starter armature
2004004007	SA0017	Starter armature
2004004010	SA0017	Starter armature
2004004032	SA0016	Starter armature
2004004033	SA0016	Starter armature
2004004034	SA0046	Starter armature
2004004035	SA0016	Starter armature
2004004036	SA0016	Starter armature
2004004038	SA0016	Starter armature
2004004061	SA0012	Starter armature
2004004062	SA0013	Starter armature
2004004074	SA0015	Starter armature
2004004075	SA0014	Starter armature
2004004092	SA0015	Starter armature
2004004095	SA0015	Starter armature
2004004111	SA0013	Starter armature
2004004112	SA0012	Starter armature
2004004952	SA0015	Starter armature
2004005002	SA0009	Starter armature
2004005003	SA0042	Starter armature
2004005004	SA0042	Starter armature
2004005022	SA0009	Starter armature
2004005023	SA0001	Starter armature
2004005024	SA0001	Starter armature
2004005025	SA0010	Starter armature
2004005026	SA0048	Starter armature
2004005037	SA0009	Starter armature
2004005046	SA0009	Starter armature
2004005061	SA0042	Starter armature
2004005062	SA0042	Starter armature
2004005071	SA0010	Starter armature
2004005151	SA0010	Starter armature
2004005153	SA0009	Starter armature
2004005155	SA0048	Starter armature
2004005906	SA0042	Starter armature
2004005907	SA0042	Starter armature
2004005918	SA0042	Starter armature
2004014028	SA0045	Starter armature
2004014034	SA0046	Starter armature
2004014049	BSX100	Sta. Brush set
2004014060	SA0017	Starter armature
2004014075	SA0016	Starter armature
2004014951	SA0014	Starter armature
2004014952	SA0015	Starter armature
2004014960	SA0017	Starter armature
2004014961	SA0017	Starter armature
2004014975	SA0016	Starter armature
2004105048	SF0005	Starter field coil
2004114060	SF0015	Starter field coil
2004114065	SF0004	Starter field coil
2004114085	SF0006	Starter field coil
2004114134	SF0004	Starter field coil
2004114135	SF0004	Starter field coil
2004114143	SF0006	Starter field coil
2004114145	SF0006	Starter field coil
2004114168	SF0001	Starter field coil
2004114169	SF0002	Starter field coil
2004114290	SF0004	Starter field coil
2004114291	SF0015	Starter field coil
2004114295	SF0004	Starter field coil
2004114297	SF0015	Starter field coil
2004124001	SF0018	Starter field coil
2004124005	SF0014	Starter field coil
2004124006	SF0014	Starter field coil
2004125048	SF0005	Starter field coil
2004125075	SF0003	Starter field coil
2004125076	SF0005	Starter field coil
2004125078	SF0003	Starter field coil
2004125080	SF0003	Starter field coil
2004125083	SF0005	Starter field coil
2004320173	BSX75	Sta. Brush set
2004336027	SBH0001	S. Brush holder
2004336028	SBH0003	S. Brush holder
2004336031	SBH0002	S. Brush holder
2004336040	SBH0002	S. Brush holder
2004336041	SBH0004	S. Brush holder
2004336044	SBH0003	S. Brush holder
2004336067	SBH0003	S. Brush holder
2004336078	SBH0021	S. Brush holder
2004336085	SBH0018	S. Brush holder
2004336086	SBH0024	S. Brush holder
2004449002	SRS0016	Repair set
2004449086	SRS0016	Repair set
2004632026	SRS0014	Repair set
2005005026	SA0048	Starter armature
2005824325	SBR0019	Starter bracket
2005824570	SBR0002	Starter bracket
2005824666	SBR0002	Starter bracket
2005824692	SBR0019	Starter bracket
2005824843	SBR0002	Starter bracket
2005824916	SBR0019	Starter bracket
2005825070	SBR0004	Starter bracket
2005825071	SBR0004	Starter bracket
2005825083	SBR0005	Starter bracket
2005825087	SBR0004	Starter bracket
2005825169	SBR0005	Starter bracket
2005825186	SBR0005	Starter bracket
2005825218	SBR0003	Starter bracket
2005825226	SBR0005	Starter bracket
2005825359	SBR0006	Starter bracket
2005825378	SBR0004	Starter bracket
2005831167	SBR0008	Starter bracket
2005834009	SBR0019	Starter bracket
2005834035	SBR0011	Starter bracket
2005834325	SBR0019	Starter bracket
2005834341	SBR0002	Starter bracket
2005855184	SBH0019	S. Brush holder
2005855199	SBH0019	S. Brush holder
2005855297	SBH0019	S. Brush holder
2005855298	SBH0019	S. Brush holder
2005855299	SBH0019	S. Brush holder
2005855306	SBH0019	S. Brush holder
2005855338	SBH0019	S. Brush holder
2005855377	SBH0019	S. Brush holder
2005855378	SBH0019	S. Brush holder
2006202000	SD0028	Drive
2006202001	SD0029	Drive
2006202003	SD0029	Drive
2006202010	SD0079	Drive
2006202011	SD0079	Drive
2006208011	SD0114	Drive
2006209022	SD0114	Drive
2006209030	SD0114	Drive
2006209043	SD0114	Drive
2006209068	SD0114	Drive
2006209086	SD0048	Drive
2006209095	SD0048	Drive
2006209107	SD0018	Drive
2006209111	SD0009	Drive
2006209117	SD0018	Drive
2006209119	SD0018	Drive
2006209162	SD0002	Drive
2006209163	SD0139	Drive
2006209183	SD0114	Drive
2006209200	SD0106	Drive
2006209201	SD0106	Drive
2006209212	SD0114	Drive
2006209215	SD0048	Drive
2006209229	SD0048	Drive
2006209240	SD0008	Drive
2006209241	SD0003	Drive
2006209242	SD0003	Drive
2006209246	SD0152	Drive
2006209249	SD0003	Drive
2006209280	SD0030	Drive
2006209301	SD0018	Drive
2006209305	SD0009	Drive
2006209306	SD0106	Drive
2006209321	SD0105	Drive
2006209330	SD0008	Drive
2006209331	SD0003	Drive
2006209332	SD0003	Drive

BOSCH	AS	PRODUCT
2006209336	SD0152	Drive
2006209341	SD0018	Drive
2006209345	SD0009	Drive
2006209346	SD0106	Drive
2006209394	SD0009	Drive
2006209401	SD0018	Drive
2006209405	SD0009	Drive
2006209406	SD0018	Drive
2006209408	SD0019	Drive
2006209418	SD0008	Drive
2006209421	SD0018	Drive
2006209422	SD0018	Drive
2006209423	SD0019	Drive
2006209425	SD0020	Drive
2006209426	SD0054	Drive
2006209427	SD0047	Drive
2006209431	SD0017	Drive
2006209432	SD0121	Drive
2006209435	SD0009	Drive
2006209436	SD0018	Drive
2006209438	SD0019	Drive
2006209446	SD0046	Drive
2006209448	SD0008	Drive
2006209449	SD0011	Drive
2006209452	SD0050	Drive
2006209453	SD0050	Drive
2006209457	SD0047	Drive
2006209458	SD0064	Drive
2006209459	SD0047	Drive
2006209462	SD0027	Drive
2006209465	SD0053	Drive
2006209466	SD0021	Drive
2006209469	SD0011	Drive
2006209470	SD0010	Drive
2006209471	SD0004	Drive
2006209476	SD0011	Drive
2006209477	SD0089	Drive
2006209478	SD0007	Drive
2006209483	SD0010	Drive
2006209485	SD0011	Drive
2006209492	SD0012	Drive
2006209494	SD0020	Drive
2006209495	SD0050	Drive
2006209498	SD0025	Drive
2006209499	SD0027	Drive
2006209500	SD0004	Drive
2006209501	SD0089	Drive
2006209503	SD0089	Drive
2006209504	SD0011	Drive
2006209529	SD0012	Drive
2006209530	SD0012	Drive
2006209531	SD0037	Drive
2006209532	SD0050	Drive
2006209533	SD0025	Drive
2006209536	SD0012	Drive
2006209537	SD0037	Drive
2006209539	SD0025	Drive
2006209540	SD0085	Drive
2006209541	SD0037	Drive
2006209542	SD0085	Drive
2006209543	SD0064	Drive
2006209544	SD0064	Drive
2006209594	SD0055	Drive
2006209900	SD0114	Drive
2006209904	SD0114	Drive
2006209915	SD0114	Drive
2006209930	SD0012	Drive
2006209931	SD0047	Drive
2006209932	SD0025	Drive
2006209933	SD0037	Drive
2006382013	SD0006	Drive
2006382017	SD0006	Drive
2006382018	SD0005	Drive
2006382019	SD0015	Drive
2006382020	SD0006	Drive
2006382150	SD0006	Drive
2006382152	SD0005	Drive
2006382156	SD0005	Drive
2006382172	SD0015	Drive
2006382176	SD0006	Drive
2006382178	SD0157	Drive
2006382182	SD0157	Drive
2006382188	SD0157	Drive
2006382190	SD0113	Drive
2006383150	SD0006	Drive
2006383176	SD0006	Drive
2006401527	SD0104	Drive
2007010059	SA0042	Starter armature
2007010061	SA0042	Starter armature
2007011029	SRS0005	Repair set
2007011060	SRS0006	Repair set
2007011070	SRS0007	Repair set
2007011072	SRS0008	Repair set
2007014004	SRS0001	Repair set
2007014015	BSX148	Sta. Brush set
2007014019	BSX102	Sta. Brush set
2007014021	BSX34	Sta. Brush set
2007014022	BSX100	Sta. Brush set
2007014026	BSX75	Sta. Brush set
2007014032	BSX100	Sta. Brush set
2007014035	BSX100	Sta. Brush set
2007014042	BSX148	Sta. Brush set
2007014044	BSX96	Sta. Brush set
2007014047	SRS0001	Repair set
2007014049	BSX100	Sta. Brush set
2007014050	BSX96	Sta. Brush set
2007014051	BSX100	Sta. Brush set
2007014052	BSX96	Sta. Brush set
2007014053	BSX102	Sta. Brush set
2007014054	BSX76	Sta. Brush set
2007014056	BSX96	Sta. Brush set
2007014057	BSX137-143	Sta. Brush set
2007014058	BSX138-142	Sta. Brush set
2007014062	BSX134-144	Sta. Brush set
2007014063	BSX135-145	Sta. Brush set
2007014064	BSX96	Sta. Brush set
2007014065	BSX139	Sta. Brush set
2007014068	BSX137-143	Sta. Brush set
2007014069	BSX138-142	Sta. Brush set
2007014070	BSX148	Sta. Brush set
2007014073	BSX134-144	Sta. Brush set
2007014074	BSX148	Sta. Brush set
2007014076	BSX134-144	Sta. Brush set
2007014078	BSX100	Sta. Brush set
2007014079	BSX172-173	Sta. Brush set
2007014082	BSX177	Sta. Brush set
2007014566	BSX96	Sta. Brush set
2007022001	SS0001	Starter solenoid
2008109203	SD0079	Drive
2008209008	SD0012	Drive
2009994113	SBH0002	S. Brush holder
2197311005	ARE0014	Regulator
2197311008	ARE0016	Regulator
2197311021	ARE0014	Regulator
2197311022	ARE0003	Regulator
2197311023	ARE0016	Regulator
2197311026	ARE0014	Regulator
2197311027	ARE0014	Regulator
2197311028	ARE0021	Regulator
2197311029	ARE0021	Regulator
2197311032	ARE0021	Regulator
2197311090	ARE0001	Regulator
2197311301	ARE0005	Regulator
23339303724	SS0017	Starter solenoid
2339303001	SS0038	Starter solenoid
2339303201	SS0038	Starter solenoid
2339303202	SS0026	Starter solenoid
2339303206	SS0038	Starter solenoid
2339303207	SS0020	Starter solenoid
2339303210	SS0040	Starter solenoid
2339303211	SS0017	Starter solenoid
2339303220	SS0046	Starter solenoid
2339303222	SS0017	Starter solenoid
2339303225	SS0017	Starter solenoid
2339303229	SS0036	Starter solenoid
2339303231	SS0010	Starter solenoid
2339303232	SS0067	Starter solenoid
2339303240	SS0064	Starter solenoid
2339303241	SS0064	Starter solenoid
2339303245	SS0037	Starter solenoid
2339303246	SS0025	Starter solenoid
2339303248	SS0036	Starter solenoid
2339303250	SS0064	Starter solenoid
2339303251	SS0020	Starter solenoid
2339303254	SS0047	Starter solenoid
2339303256	SS0020	Starter solenoid
2339303258	SS0017	Starter solenoid
2339303261	SS0035	Starter solenoid
2339303263	SS0019	Starter solenoid
2339303265	SS0017	Starter solenoid
2339303270	SS0006	Starter solenoid
2339303271	SS0063	Starter solenoid
2339303272	SS0063	Starter solenoid
2339303273	SS0048	Starter solenoid
2339303283	SS0005	Starter solenoid
2339303284	SS0011	Starter solenoid
2339303289	SS0051	Starter solenoid
2339303291	SS0036	Starter solenoid
2339303294	SS0026	Starter solenoid
2339303296	SS0011	Starter solenoid
2339303306	SS0026	Starter solenoid
2339303315	SS0046	Starter solenoid
2339303316	SS0051	Starter solenoid
2339303318	SS0046	Starter solenoid
2339303319	SS0045	Starter solenoid
2339303324	SS0036	Starter solenoid

BOSCH	AS	PRODUCT
2339303339	SS0017	Starter solenoid
2339303351	SS0017	Starter solenoid
2339303354	SS0045	Starter solenoid
2339303363	SS0010	Starter solenoid
2339303377	SS0017	Starter solenoid
2339303386	SS0045	Starter solenoid
2339303390	SS0017	Starter solenoid
2339303396	SS0063	Starter solenoid
2339303403	SS0067	Starter solenoid
2339303405	SS0051	Starter solenoid
2339303407	SS0036	Starter solenoid
2339303408	SS0010	Starter solenoid
2339303411	SS0047	Starter solenoid
2339303432	SS0051	Starter solenoid
2339303435	SS0010	Starter solenoid
2339303438	SS0047	Starter solenoid
2339303706	SS0038	Starter solenoid
2339303722	SS0017	Starter solenoid
2339303724	SS0017	Starter solenoid
2339303857	SS0028	Starter solenoid
2339304001	SS0021	Starter solenoid
2339304002	SS0039	Starter solenoid
2339304005	SS0016	Starter solenoid
2339304006	SS0039	Starter solenoid
2339304007	SS0049	Starter solenoid
2339304008	SS0013	Starter solenoid
2339304009	SS0016	Starter solenoid
2339304010	SS0016	Starter solenoid
2339304013	SS0016	Starter solenoid
2339304018	SS0039	Starter solenoid
2339304019	SS0039	Starter solenoid
2339304021	SS0039	Starter solenoid
2339304023	SS0049	Starter solenoid
2339304039	SS0039	Starter solenoid
2339304040	SS0016	Starter solenoid
2339304046	SS0016	Starter solenoid
2339304249	SS0064	Starter solenoid
2339305014	SS0054	Starter solenoid
2339305025	SS0052	Starter solenoid
2339305033	SS0042	Starter solenoid
2339305034	SS0054	Starter solenoid
2339305043	SS0044	Starter solenoid
2339305051	SS0043	Starter solenoid
2339305054	SS0054	Starter solenoid
2339305056	SS0052	Starter solenoid
2339305076	SS0054	Starter solenoid
2339305078	SS0052	Starter solenoid
2339305111	SS0068	Starter solenoid
2339305119	SS0052	Starter solenoid
2339402117	SS0029	Starter solenoid
2339402119	SS0055	Starter solenoid
2339402120	SS0004	Starter solenoid
2339402124	SS0058	Starter solenoid
2339402136	SS0059	Starter solenoid
2339402141	SS0009	Starter solenoid
2339402156	SS0029	Starter solenoid
2339402157	SS0059	Starter solenoid
2339402161	SS0004	Starter solenoid
2339402165	SS0058	Starter solenoid
2339402180	SS0029	Starter solenoid
2339402220	SS0041	Starter solenoid
2339403006	SS0030	Starter solenoid
2339403008	SS0027	Starter solenoid
2339403010	SS0027	Starter solenoid
2339403506	SS0030	Starter solenoid
2339450012	SS0001	Starter solenoid
2339450013	SS0031	Starter solenoid
365740BB1B	ABE9041(NSK)	Bearing
4197311511	ARE0039	Regulator
6004AA0003	S0102	Starter
6004AA0008	S0102	Starter
6004AA0018	S0035	Starter
6004AA0027	S0102	Starter
6004AHS018	SD0156	Drive
6004ML0000	A0182	Alternator
6004ML0001	A0182	Alternator
6033A4093	SF0016	Starter field coil
6033A4096	SF0016	Starter field coil
6033A4098	SF0016	Starter field coil
6033AB1J00	S0153	Starter
6033AD0004	SD0102	Drive
6033AD0007	SF0019	Starter field coil
6033AD0010	SA0052	Starter armature
6033AD0014	SBH0023	S. Brush holder
6033AD0044	SD0038	Drive
6033AD0058	SF0020	Starter field coil
6033AD0061	SD0098	Drive
6033AD0063	SG0021	Starter gear
6033AD0077	SD0108	Drive
6033AD0086	SS0033	Starter solenoid
6033AD0091	SD0151	Drive
6033AD0115	SD0122	Drive
6033AD0128	SF0016	Starter field coil
6033AD0129	SD0109	Drive
6033AD0130	SBH0017	S. Brush holder
6033AD0148	SD0112	Drive
6033AD0151	SF0016	Starter field coil
6033AD0156	SBH0017	S. Brush holder
6033AD0159	SBH0023	S. Brush holder
6033AD0160	SF0020	Starter field coil
6033AD0162	SF0019	Starter field coil
6033AD0174	SBR0017	Starter bracket
6033AD0184	SD0101	Drive
6033AD0200	SD0101	Drive
6033AD0206	SA0051	Starter armature
6033AD0218	SD0125	Drive
6033AD0225	SF0020	Starter field coil
6033AD0231	SBR0017	Starter bracket
6033AD0242	SD0122	Drive
6033AD0243	SD0123	Drive
6033AD0250	SD0143	Drive
6033AD0270	SD0117	Drive
6033AD0285	SA0041	Starter armature
6033AD0304	SD0122	Drive
6033AD0306	SD0123	Drive
6033AD0368	SBH0023	S. Brush holder
6033AD0380	SBH0017	S. Brush holder
6033AD0401	SBH0023	S. Brush holder
6033AD0414	SD0103	Drive
6033AD0436	SA0052	Starter armature
6033AD0440	SS0022	Starter solenoid
6033AD0442	SD0083	Drive
6033AD0446	SA0050	Starter armature
6033AD0462	SD0083	Drive
6033AD0467	SD0122	Drive
6033AD0471	SBH0017	S. Brush holder
6033AD1002	SD0108	Drive
6033AD1059	SA0052	Starter armature
6033AD1061	SA0050	Starter armature
6033AD1062	SD0142	Drive
6033AD1104	SA0050	Starter armature
6033AD1107	SA0051	Starter armature
6033AD1245	SF0019	Starter field coil
6033AD1251	SF0020	Starter field coil
6033AD3006	SD0083	Drive
6033AD3108	SD0083	Drive
6033AD3120	SD0112	Drive
6033AD3130	SD0112	Drive
6033AD3172	SBR0017	Starter bracket
6033AD3244	SD0083	Drive
6033AD3310	SG0022	Starter gear
6033AD3850	SD0083	Drive
6033AD4001	SD0122	Drive
6033AD4013	SA0041	Starter armature
6033AD4019	SD0101	Drive
6033AD4026	SBH0017	S. Brush holder
6033AD4034	SD0083	Drive
6033AD4052	SD0122	Drive
6033AD4064	SF0016	Starter field coil
6033AD4080	SA0041	Starter armature
6033AD4092	SF0016	Starter field coil
6033AD4093	SF0016	Starter field coil
6033AD4096	SF0016	Starter field coil
6033AD4098	SF0016	Starter field coil
6033AD4107	SF0016	Starter field coil
6033AD4108	SF0016	Starter field coil
6033AD4109	SF0016	Starter field coil
6033AD4148	SD0083	Drive
6033AD4161	SBH0017	S. Brush holder
6033AD4180	SBH0017	S. Brush holder
6033AD5025	SA0057	Starter armature
6033AD5032	SBR0012	Starter bracket
6033AD5055	SD0128	Drive
6033AD5078	SD0128	Drive
6033AD5125	SBR0018	Starter bracket
6033AD5128	SBH0026	S. Brush holder
6033AD5138	SS0060	Starter solenoid
6033AD5173	SG0025	Starter gear
6033AD5190	SS0061	Starter solenoid
6033AD5255	SS0060	Starter solenoid
6033AD5355	SD0128	Drive
6033AD6153	SS0060	Starter solenoid
6033G2019B	A0082	Alternator
6033G3020B	A3059	Alternator
6033GB2009	A0135	Alternator
6033GB3010	A0011	Alternator
6033GB3019	A0007	Alternator
6033GB3020	A3059	Alternator
6033GB3021	A0008	Alternator
6033GB3022	A0007	Alternator
6033GB3023	A0011	Alternator
6033GB3027	A0007	Alternator
6033GB3033	A0029	Alternator
6033GB3034	A0029	Alternator
6033GB3047	A0001	Alternator
6033GB3053	A0001	Alternator

BOSCH	AS	PRODUCT
6033GB3054	A0002	Alternator
6033GB3055	A0001	Alternator
6033GC5009	AFP0046	FW pulley
6033GD4121	ARC0004	Rectifier
6033GD5036	AFP0003	FW pulley
6033GD5106	AP0019	Pulley
6033GD7001	ABE9008	Bearing
6033RD0002	ARE0005	Regulator
6033RD2004	ARE0023	Regulator
6033RDO002	ARE0005	Regulator
6333G3013B	A0023	Alternator
9000020027	S0046	Starter
9000042021	S0046	Starter
9000042027	S0046	Starter
9000042034	S0046	Starter
9000042057	S0072	Starter
9000082009	S0046	Starter
9000082050	S0050	Starter
9000082059	S0050	Starter
9000083054	S0067	Starter
9000083065	S0002	Starter
9000084018	S0007	Starter
9000141101	S4033	Starter
9000141107	S4033	Starter
9000143400	S4018	Starter
9000143601	S0002	Starter
9000330939	S4033	Starter
9000330948	S4033	Starter
9000331406	S0165	Starter
9000331420	S0183	Starter
9000331421	S0165	Starter
9000331424	S0165	Starter
9000331430	S0165	Starter
9000333117	S3015	Starter
9000333118	S0247	Starter
9000333119	S0247	Starter
9000333121	S5016	Starter
9000692050	S0072	Starter
9000692069	S5014	Starter
9000694029	S0062	Starter
9001042021	SD0002	Drive
9001049121	SA0040	Starter armature
9001066236	SD0001	Drive
9001066242	SD0052	Drive
9001066247	SD0052	Drive
9001066248	SD0052	Drive
9001066476	SD0052	Drive
9001081010	SD0058	Drive
9001081022	SD0014	Drive
9001081033	SD0063	Drive
9001082166	SBU9009	Bushing
9001082324	SD0042	Drive
9001082340	SD0001	Drive
9001082362	SD0002	Drive
9001082669	SD0002	Drive
9001082686	SD0001	Drive
9001082749	SD0042	Drive
9001083406	SD0046	Drive
9001083436	SD0046	Drive
9001083444	SD0114	Drive
9001083498	SA0059	Starter armature
9001084064	SD0113	Drive
9001133219	SD4004	Drive
9001140275	SA0012	Starter armature
9001140317	SD0036	Drive
9001140322	SG0005	Starter gear
9001140339	SA0025	Starter armature
9001140347	SBU9040	Bushing
9001140362	SG0002	Starter gear
9001140384	ABE9045	Bearing
9001141143	SA0017	Starter armature
9001330323	SBU9033	Bushing
9001333409	SP0007	Solenoids parts
9001334000	SA0021	Starter armature
9001336244	SG0022	Starter gear
9001336324	SD0001	Drive
9001337056	SG0008	Starter gear
9001337057	SG0009	Starter gear
9001337062	SG0008	Starter gear
9001338021	SBR0016	Starter bracket
9001338056	SBR0017	Starter bracket
9001453644	BSX177	Sta. Brush set
9001453717	SF0018	Starter field coil
9001690111	SD0052	Drive
9002335832	SBR0009	Starter bracket
9002336200	SD0153	Drive
9002336204	SD0059	Drive
9002336205	SD0153	Drive
9002336207	SD0035	Drive
9002336208	SD0082	Drive
9002336209	SD0038	Drive
9002336219	SD0034	Drive
9002336223	SD0065	Drive
9002336224	SD0094	Drive
9002336225	SD0084	Drive
9002336230	SD0154	Drive
9002336236	SD0083	Drive
9002336237	SD0101	Drive
9002336238	SD0034	Drive
9002336283	SD0034	Drive
9002336287	SD0094	Drive
9002338850	SG0005	Starter gear
9002338856	SBR0015	Starter bracket
9002338889	SBR0009	Starter bracket
9002453073	SD0046	Drive
9003330317	SBU9048	Bushing
9003334021	SA0025	Starter armature
9003334024	SA0039	Starter armature
9003334025	SA0025	Starter armature
9003334026	SA0025	Starter armature
9003334029	SA0025	Starter armature
9003334031	SA0036	Starter armature
9003334032	SA0036	Starter armature
9003334033	SA0025	Starter armature
9003334034	SA0025	Starter armature
9003334039	SA0041	Starter armature
9003334104	SF0002	Starter field coil
9003334158	SBH0015	S. Brush holder
9003334314	SBH0010	S. Brush holder
9003334359	BSX190-191	Sta. Brush set
9003334363	SBH0017	S. Brush holder
9003336201	SD0035	Drive
9003336206	SD0049	Drive
9003336223	SD0065	Drive
9003336268	SG0003	Starter gear
9003336280	SD0038	Drive
9003336282	SD0111	Drive
9003336283	SD0034	Drive
9003336284	SD0035	Drive
9003336289	SD0034	Drive
9003336290	SD0056	Drive
9003336291	SD0033	Drive
9003336293	SD0036	Drive
9003336296	SG0009	Starter gear
9006033136	SD0123	Drive
9006033306	SD0123	Drive
9007042024	S0046	Starter
9007044002	S0067	Starter
9007044014	S9045	Starter
9007045009	S0028	Starter
9007045016	S2017	Starter
9007045018	S0035	Starter
9007045020	S0028	Starter
9009082059	S0050	Starter
9009991159	BSX34	Sta. Brush set
9120060041	A0082	Alternator
9120067027	ARC0039	Rectifier
9120080088	A0099	Alternator
9120080114	A0099	Alternator
9120144228	A4081	Alternator
9120144229	A4081	Alternator
9120144240	A4081	Alternator
9120144241	A4081	Alternator
9120144269	A0069	Alternator
9120144270	A0069	Alternator
9120144285	A3007	Alternator
9120144286	A3007	Alternator
9120144295	A3048	Alternator
9120144296	A3048	Alternator
9120144302	A3006	Alternator
9120144303	A3006	Alternator
9120145002	A0058	Alternator
9120690145	A4066	Alternator
9120690146	A4066	Alternator
9120690170	A4066	Alternator
9121067091	BX204	Alt. Brush set
9121067364	ARC0039	Rectifier
9121067371	ARC0039	Rectifier
9121067374	ARC0039	Rectifier
9121067375	ARC0039	Rectifier
9121067385	ARC0039	Rectifier
9121067388	ARC0039	Rectifier
9121067394	ARC0039	Rectifier
9121080963	ARC0013	Rectifier
9121140295	ARC0004	Rectifier
9121147302	ARC0011	Rectifier
9121334114	AS0002	Stator
9121337079	ARE0021	Regulator
9121456090	AS0001	Stator
9122080234	ABE9041(NSK)	Bearing
9122080559	AS0002	Stator
9123320007	A0077	Alternator
9123320012	A0161	Alternator
9123320016	A3081	Alternator
9123369044	A0005	Alternator
9127041200	A0028	Alternator

BOSCH	AS	PRODUCT
9127041201	A0028	Alternator
9129080088	A0099	Alternator
9152053021	ARE0035	Regulator
9190041002	ARE0033	Regulator
9190067016	ARE0049	Regulator
9190067017	ARE0049	Regulator
9190067018	ARE0050	Regulator
9190067019	ARE0049	Regulator
9190067020	ARE0049	Regulator
9190087014	ARE0027	Regulator
9190087026	ARE0072	Regulator
9190087032	ARE0072	Regulator
9190456007	ARE0070	Regulator
9190457001	ARE0032	Regulator
9190457002	ARE0071	Regulator
9190457003	ARE0035	Regulator
9191337302	ARE0037	Regulator
9191337303	ARE0021	Regulator
9191337305	ARE0001	Regulator
9191337306	ARE0037	Regulator
9191337307	ARE0037	Regulator
9191337311	ARE0031	Regulator
9330041005	SS0057	Starter solenoid
9330081028	SS0009	Starter solenoid
9330081030	SS0015	Starter solenoid
9330081039	SS0006	Starter solenoid
9330081042	SS0008	Starter solenoid
9330081050	SS0067	Starter solenoid
9330081060	SS0066	Starter solenoid
9330081061	SS0066	Starter solenoid
9330081062	SS0062	Starter solenoid
9330081064	SS0065	Starter solenoid
9330081065	SS0011	Starter solenoid
9330081066	SS0020	Starter solenoid
9330081068	SS0017	Starter solenoid
9330091064	SS0065	Starter solenoid
9330142004	SS0008	Starter solenoid
9330142504	SS0008	Starter solenoid
9330331001	SS0028	Starter solenoid
9337043526	SS0050	Starter solenoid
9900333089	SBU9035	Bushing
9902455037	ABE9003	Bearing
B001109104	S0225	Starter
B001110042	S0126	Starter
B001110043	S0054	Starter
B001110097	S0098	Starter
B001110116	S0072	Starter
B001110240	S0238	Starter
B001111024	S0057	Starter
B001111106	S0034	Starter
B001111158	S0044	Starter
B001111164	S3031	Starter
B001111214	S0034	Starter
B001111217	S0190R	Starter
B001111273	S9008	Starter
B001111361	S3052	Starter
B001111498	S0073	Starter
B001116092	S0176	Starter
B001116118	S0106	Starter
B001117012	S0217	Starter
B001117050	S0051	Starter
B001117070	S0069	Starter
B001117071	S0045	Starter
B001117148	S0051	Starter
B001117149	S0051	Starter
B001117311	S3001	Starter
B001120046	S0032	Starter
B001126081	S0049	Starter
B001127016	S3041	Starter
B001127041	S0125	Starter
B001180009	S0050	Starter
B001181007	S0072	Starter
B001181014	S0190R	Starter
B001208256	S0077	Starter
B001233033	S0043	Starter
B001233104	S0043	Starter
B001233112	S0043	Starter
B001233121	S0016	Starter
B001233158	S0047	Starter
B001233172	S0016	Starter
B001233216	S0042	Starter
B001233261	S0016	Starter
B001260015	S0037	Starter
B001410028	S0222(BOSCH)R	Starter
B001411324	S0003	Starter
B001816006	S0041	Starter
B001816326	S0002	Starter
B001816486	S0130	Starter
B001816592	S0040	Starter
B001860021	S0076	Starter
B001860023	S0076	Starter
B001960018	S0019	Starter
B120310084	A0131	Alternator
B120310087	A0202	Alternator
B120411182	A0078	Alternator
B120411203	A0202	Alternator
B120411204	A0202	Alternator
B120411528	A0153	Alternator
B120416351	A0043	Alternator
B120421831	A0101	Alternator
B120421892	A0101	Alternator
B120421999	A0001	Alternator
B120500330	A0106	Alternator
B120500331	A0106	Alternator
B120500755	A0002	Alternator
B120501009	A0094	Alternator
B120501043	A0111	Alternator
B120510214	A1012	Alternator
B120510330	A0048	Alternator
B120510614	A0186	Alternator
B120516076	A0036	Alternator
B120516094	A0143	Alternator
BIM140	IM0001	Ignition Module
BNG4/24	S0151	Starter
BNG4/24CR231	S0151	Starter
BNG4/24CRS162	S0151	Starter
BNG4/24CRS163	S0151	Starter
BNG4/24CRS165	S0151	Starter
D001965593	SD0124	Drive
F-225653-911	AT0003	Combi tools
F000AL0101	S3020	Starter
F000AL0128	SG0020	Starter gear
F000AL0319	S4022	Starter
F000AL0320	S4025	Starter
F000AL1001	SD0042	Drive
F000AL1005	SBU9016	Bushing
F000AL1040	SD0014	Drive
F000AL1055	SBH0011	S. Brush holder
F000AL1100	SD0092	Drive
F000AL1326	SBH0034	S. Brush holder
F000AL1483	SBH0034	S. Brush holder
F000AL1521	SA0007	Starter armature
F000AL1704	SD0058	Drive
F000AL1881	SD0034	Drive
F000AL2034	SBH0022	S. Brush holder
F000SH0102	SS0017	Starter solenoid
F000SH0108	SS0020	Starter solenoid
F000SH0120	SS0017	Starter solenoid
F000SH0125	SS0013	Starter solenoid
F000SH0131	SS0013	Starter solenoid
F000SH0133	SS0017	Starter solenoid
F000SH0136	SS0017	Starter solenoid
F000SH0139	SS0020	Starter solenoid
F004A94410	S0185	Starter
F005A00023	A0018	Alternator
F005A00024	A0082	Alternator
F005M00001	S0098	Starter
F005M10053	SD0097	Drive
F009AL0101	S3020	Starter
F00M061001	AP0020	Pulley
F00M061005	AFP0032	FW pulley
F00M061010	AFP0006	FW pulley
F00M061016	AFP0022	FW pulley
F00M061023	AFP0008	FW pulley
F00M110110	AS0016	Stator
F00M111602	AR0013	Rotor
F00M111604	AR0012	Rotor
F00M111609	AR0012	Rotor
F00M111613	AR0013	Rotor
F00M111615	AR0013	Rotor
F00M111636	AR0013	Rotor
F00M113209	ARC0058	Rectifier
F00M120102	AS0018	Stator
F00M120104	AS0013	Stator
F00M120107	AS0018	Stator
F00M120111	AS0014	Stator
F00M120120	AS0014	Stator
F00M120126	AS0021	Stator
F00M120130	AS0017	Stator
F00M121611	AR0013	Rotor
F00M121622	AR0013	Rotor
F00M121636	AR0013	Rotor
F00M123200	ARC0043	Rectifier
F00M123201	ARC0043	Rectifier
F00M123202	ARC0044	Rectifier
F00M123210	ARC0060	Rectifier
F00M123227	ARC0043	Rectifier
F00M123244	ARC0043	Rectifier
F00M123250	ARC0059	Rectifier
F00M123324	ARC0059	Rectifier
F00M123337	ARC0044	Rectifier
F00M123347	ARC0060	Rectifier
F00M126603	APC0002	Plastic cover
F00M130111	AS0020	Stator
F00M130113	AS0009	Stator
F00M130126	AS0019	Stator

BOSCH	AS	PRODUCT
F00M131615	AR0015	Rotor
F00M131621	AR0015	Rotor
F00M131629	AR0014	Rotor
F00M131631	AR0015	Rotor
F00M133201	ARC0043	Rectifier
F00M133205	ARC0043	Rectifier
F00M133208	ARC0052	Rectifier
F00M133215	ARC0065	Rectifier
F00M133218	ARC0065	Rectifier
F00M133223	ARC0048	Rectifier
F00M133226	ARC0055	Rectifier
F00M133228	ARC0043	Rectifier
F00M133229	ARC0065	Rectifier
F00M133240	ARC0064	Rectifier
F00M133241	ARC0043	Rectifier
F00M133246	ARC0043	Rectifier
F00M133247	ARC0065	Rectifier
F00M133259	ARC0065	Rectifier
F00M133266	ARC0052	Rectifier
F00M133291	ARC0048	Rectifier
F00M133331	ARC0064	Rectifier
F00M133346	ARC0048	Rectifier
F00M133347	ARC0052	Rectifier
F00M144102	ARE0042	Regulator
F00M144103	ARE0054	Regulator
F00M144107	ARE0042	Regulator
F00M144108	ARE0076	Regulator
F00M144109	ARE0067	Regulator
F00M144111	ARE0018	Regulator
F00M144118	ARE0042	Regulator
F00M144119	ARE0054	Regulator
F00M144120	ARE0054	Regulator
F00M144123	ARE0042	Regulator
F00M144132	ARE0076	Regulator
F00M144136	ARE0008	Regulator
F00M144137	ARE0073	Regulator
F00M144142	ARE0012	Regulator
F00M144147	ARE0075(BOSCH)	Regulator
F00M144156	ARE0076	Regulator
F00M144160	ARE0067	Regulator
F00M144171	ARE0043	Regulator
F00M144181	ARE0063	Regulator
F00M144288	ARE0073	Regulator
F00M145107	ARE0042	Regulator
F00M145200	ARE0008	Regulator
F00M145201	ARE0012	Regulator
F00M145204	ARE0018	Regulator
F00M145206	ARE0013	Regulator
F00M145207	ARE0059	Regulator
F00M145208	ARE0041	Regulator
F00M145209	ARE0008	Regulator
F00M145211	ARE0013	Regulator
F00M145214	ARE0040	Regulator
F00M145220	ARE0009	Regulator
F00M145225	ARE0008	Regulator
F00M145228	ARE0043	Regulator
F00M145229	ARE0041	Regulator
F00M145231	ARE0012	Regulator
F00M145232	ARE0052	Regulator
F00M145233	ARE0008	Regulator
F00M145235	ARE0040	Regulator
F00M145236	ARE0045	Regulator
F00M145237	ARE0008	Regulator
F00M145238	ARE0008	Regulator
F00M145239	ARE0018	Regulator
F00M145240	ARE0013	Regulator
F00M145243	ARE0052	Regulator
F00M145244	ARE0073	Regulator
F00M145245	ARE0051	Regulator
F00M145246	ARE0054	Regulator
F00M145247	ARE0058	Regulator
F00M145251	ARE0051	Regulator
F00M145252	ARE0052	Regulator
F00M145255	ARE0060	Regulator
F00M145256	ARE0042	Regulator
F00M145258	ARE0074	Regulator
F00M145260	ARE0012	Regulator
F00M145261	ARE0008	Regulator
F00M145266	ARE0066	Regulator
F00M145267	ARE0042	Regulator
F00M145269	ARE0013	Regulator
F00M145270	ARE0052	Regulator
F00M145272	ARE0075(BOSCH)	Regulator
F00M145276	ARE0063	Regulator
F00M145281	ARE0012	Regulator
F00M145282	ARE0012	Regulator
F00M145283	ARE0043	Regulator
F00M145286	ARE0057	Regulator
F00M145289	ARE0074	Regulator
F00M145292	ARE0076	Regulator
F00M145293	ARE0075(BOSCH)	Regulator
F00M145296	ARE0008	Regulator
F00M145297	ARE0054	Regulator
F00M145298	ARE0042	Regulator
F00M145299	ARE0042	Regulator
F00M145302	ARE0042	Regulator
F00M145305	ARE0045	Regulator
F00M145307	ARE0042	Regulator
F00M145315	ARE0008	Regulator
F00M145322	ARE0065(BOSCH)	Regulator
F00M145324	ARE0045	Regulator
F00M145333	ARE0008	Regulator
F00M145337	ARE0008	Regulator
F00M145338	ARE0008	Regulator
F00M145341	ARE0008	Regulator
F00M145344	ARE0008	Regulator
F00M145346	ARE0013	Regulator
F00M145347	ARE0059	Regulator
F00M145348	ARE0040	Regulator
F00M145349	ARE0009	Regulator
F00M145350	ARE0008	Regulator
F00M145351	ARE0041	Regulator
F00M145353	ARE0008	Regulator
F00M145354	ARE0008	Regulator
F00M145356	ARE0073	Regulator
F00M145357	ARE0058	Regulator
F00M145360	ARE0051	Regulator
F00M145361	ARE0060	Regulator
F00M145363	ARE0012	Regulator
F00M145365	ARE0066	Regulator
F00M145367	ARE0075(BOSCH)	Regulator
F00M145368	ARE0063	Regulator
F00M145369	ARE0041	Regulator
F00M145370	ARE0012	Regulator
F00M145371	ARE0043	Regulator
F00M145374	ARE0076	Regulator
F00M145376	ARE0045	Regulator
F00M145383	ARE0008	Regulator
F00M145385	ARE0075(BOSCH)	Regulator
F00M145387	ARE0018	Regulator
F00M145389	ARE0013	Regulator
F00M145394	ARE0057	Regulator
F00M145396	ARE0008	Regulator
F00M145397	ARE0008	Regulator
F00M145409	ARE0043	Regulator
F00M145656	ARE0074	Regulator
F00M145862	ARE0008	Regulator
F00M145865	ARE0045	Regulator
F00M145873	ARE0045	Regulator
F00M145874	ARE0045	Regulator
F00M145876	ARE0008	Regulator
F00M145882	ARE0074	Regulator
F00M145883	ARE0066	Regulator
F00M145884	ARE0076	Regulator
F00M145891	ARE0008	Regulator
F00M146071	APC0009	Plastic cover
F00M146605	APC0002	Plastic cover
F00M146639	APC0002	Plastic cover
F00M146652	APC0006	Plastic cover
F00M146675	APC0007	Plastic cover
F00M146692	APC0008	Plastic cover
F00M146712	APC0009	Plastic cover
F00M146743	APC0002	Plastic cover
F00M146793	APC0002	Plastic cover
F00M146900	ABEC0001	Bearing cover
F00M146901	ABEC0001	Bearing cover
F00M146902	ABEC0007	Bearing cover
F00M147721	AFP0014	FW pulley
F00M147724	AFP0009	FW pulley
F00M147732	AFP0023	FW pulley
F00M147736	AFP0032	FW pulley
F00M147738	AFP0035	FW pulley
F00M147746	AFP0028	FW pulley
F00M147747	AFP0044	FW pulley
F00M147760	AFP0007	FW pulley
F00M147764	AFP0029	FW pulley
F00M147766	AFP0029	FW pulley
F00M147767	AFP0055	FW pulley
F00M147799	AFP0007	FW pulley
F00M147800	AFP0047	FW pulley
F00M147801	AFP0010	FW pulley
F00M147806	AFP0014	FW pulley
F00M147807	AFP0058	FW pulley
F00M147821	AFP0057	FW pulley
F00M147831	AFP0058	FW pulley
F00M147854	AFP0041	FW pulley
F00M147859	AFP0048	FW pulley
F00M147876	AFP0033	FW pulley
F00M147877	AFP0063	FW pulley
F00M147878	AFP0065	FW pulley
F00M147880	AFP0066	FW pulley
F00M147906	AFP3018	FW pulley
F00M147907	AFP0029	FW pulley
F00M147913	AFP0044	FW pulley

BOSCH	AS	PRODUCT
F00M147914	AFP0028	FW pulley
F00M147936	AFP0058	FW pulley
F00M147956	AFP0057	FW pulley
F00M147957	AFP0055	FW pulley
F00M147976	AFP0056	FW pulley
F00M147999	AFP0020	FW pulley
F00M148611	AFP9002	Cover for pulley
F00M196004	APC0009	Plastic cover
F00M196012	APC0002	Plastic cover
F00M225200	ARE0055	Regulator
F00M225401	ARE0044	Regulator
F00M255200	ARE0055	Regulator
F00M255202	ARE0055	Regulator
F00M310100	AS0015	Stator
F00M310102	AS0015	Stator
F00M312002	AR0010	Rotor
F00M312012	AR0010	Rotor
F00M314001	ARC0057	Rectifier
F00M346010	ARE0061(BOSCH)	Regulator
F00M346015	ARE0061(BOSCH)	Regulator
F00M346021	ARE0077	Regulator
F00M346026	ARE0061(BOSCH)	Regulator
F00M346037	ARE0077	Regulator
F00M346047	ARE0077	Regulator
F00M346080	ARE0077	Regulator
F00M346087	ARE0061(BOSCH)	Regulator
F00M346102	ARE0064	Regulator
F00M346340	ARE0064	Regulator
F00M349810	AFP0059	FW pulley
F00M349813	AFP0052	FW pulley
F00M349814	AFP0029	FW pulley
F00M349820	AFP0028	FW pulley
F00M349823	AFP0067	FW pulley
F00M349824	AFP0068	FW pulley
F00M349826	AFP0050	FW pulley
F00M349827	AFP0045	FW pulley
F00M349828	AFP0049	FW pulley
F00M349829	AFP0036	FW pulley
F00M349859	AFP0069	FW pulley
F00M349860	AFP0064	FW pulley
F00M349870	AFP0069	FW pulley
F00M349877	AFP0027	FW pulley
F00M349878	AFP0051	FW pulley
F00M349898	AFP0028	FW pulley
F00M349899	AFP0068	FW pulley
F00M390405	ABE9003	Bearing
F00M390410	ABE9003	Bearing
F00M391100	AFP0064	FW pulley
F00M391104	AFP0049	FW pulley
F00M391105	AFP0036	FW pulley
F00M391107	AFP0027	FW pulley
F00M391108	AFP0051	FW pulley
F00M391110	AFP0050	FW pulley
F00M391112	AFP0059	FW pulley
F00M391113	AFP0052	FW pulley
F00M391118	AFP0027	FW pulley
F00M391120	AFP0027	FW pulley
F00M391121	AFP0051	FW pulley
F00M391122	AFP0028	FW pulley
F00M391124	AFP0067	FW pulley
F00M391125	AFP0051	FW pulley
F00M391131	AFP0069	FW pulley
F00M391135	AFP0064	FW pulley
F00M391138	AFP0059	FW pulley
F00M391139	AFP0052	FW pulley
F00M391140	AFP0069	FW pulley
F00M391144	AFP0049	FW pulley
F00M391145	AFP0036	FW pulley
F00M391146	AFP0050	FW pulley
F00M391157	AFP0028	FW pulley
F00M391158	AFP0068	FW pulley
F00M391159	AFP0028	FW pulley
F00M391160	AFP0031	FW pulley
F00M599403	AFP0027	FW pulley
F00M990402	ABE9021	Bearing
F00M990403	ABE9021	Bearing
F00M990405	ABE9021	Bearing
F00M990407	ABE9006	Bearing
F00M990409	ABE9006	Bearing
F00M990411	ABE9006	Bearing
F00M990412	ABE9006	Bearing
F00M990417	ABE9018	Bearing
F00M990418	ABE9021	Bearing
F00M990423	ABE9006	Bearing
F00M990424	ABE9006	Bearing
F00M990425	ABE9018	Bearing
F00M990426	ABE9018	Bearing
F00M990432	ABE9021	Bearing
F00M990710	ABE9006	Bearing
F00M991002	AFP0010	FW pulley
F00M991003	AP0013	Pulley
F00M991004	AP0012	Pulley
F00M991005	AP0021	Pulley
F00M991016	AFP0007	FW pulley
F00M991017	AP0013	Pulley
F00M991029	AP0012	Pulley
F00M991039	AFP0014	FW pulley
F00M991042	AFP0011	FW pulley
F00M991043	AFP0009	FW pulley
F00M991044	AFP0017	FW pulley
F00M991045	AFP0009	FW pulley
F00M991061	AFP0007	FW pulley
F00M991076	AFP0026	FW pulley
F00M991078	AFP0013	FW pulley
F00M991090	AFP0024	FW pulley
F00M991095	AFP0032	FW pulley
F00M991105	AFP0016	FW pulley
F00M991108	AFP0023	FW pulley
F00M991110	AFP0050	FW pulley
F00M991116	AFP0013	FW pulley
F00M991122	AFP0010	FW pulley
F00M991125	AFP0021	FW pulley
F00M991128	AFP0026	FW pulley
F00M991133	AFP0035	FW pulley
F00M991134	AFP0071	FW pulley
F00M991138	AFP0031	FW pulley
F00M991139	AFP0054	FW pulley
F00M991141	AFP0028	FW pulley
F00M991142	AFP0044	FW pulley
F00M991156	AFP0007	FW pulley
F00M991157	AFP0050	FW pulley
F00M991171	AFP0029	FW pulley
F00M991172	AFP0020	FW pulley
F00M991178	AFP0055	FW pulley
F00M991181	AFP0045	FW pulley
F00M991185	AP0021	Pulley
F00M991186	AFP0037	FW pulley
F00M991189	AFP0035	FW pulley
F00M991190	AFP0021	FW pulley
F00M991192	AFP0013	FW pulley
F00M991204	AFP0047	FW pulley
F00M991210	AFP0061	FW pulley
F00M991216	AFP0058	FW pulley
F00M991217	AFP0056	FW pulley
F00M991218	AFP0048	FW pulley
F00M991219	AFP0057	FW pulley
F00M991229	AFP0053	FW pulley
F00M991231	AFP0058	FW pulley
F00M991232	AFP0007	FW pulley
F00M991234	AFP0048	FW pulley
F00M991238	AFP0063	FW pulley
F00M991240	AFP0062	FW pulley
F00M991247	AFP0033	FW pulley
F00M991248	AFP0065	FW pulley
F00M991251	AFP0066	FW pulley
F00M991252	AFP0034	FW pulley
F00M991255	AFP0045	FW pulley
F00M991260	AFP0068	FW pulley
F00M991265	AFP0007	FW pulley
F00M991271	AFP0029	FW pulley
F00M991273	AFP0044	FW pulley
F00M991281	AFP0041	FW pulley
F00M991283	AFP0047	FW pulley
F00M991284	AFP0010	FW pulley
F00M991286	AFP0048	FW pulley
F00M991287	AFP0033	FW pulley
F00M991289	AFP0060	FW pulley
F00M991293	AFP0058	FW pulley
F00M991300	AFP0025	FW pulley
F00M991301	AFP0028	FW pulley
F00M991302	AFP0031	FW pulley
F00M991303	AFP0021	FW pulley
F00M991304	AFP0008	FW pulley
F00M991308	AFP0032	FW pulley
F00M991313	AFP0057	FW pulley
F00M991314	AFP0055	FW pulley
F00M991326	AFP0056	FW pulley
F00M991375	AFP0014	FW pulley
F00M991378	AFP0009	FW pulley
F00M991391	AFP0036	FW pulley
F00M991393	AFP0030	FW pulley
F00M991394	AFP0032	FW pulley
F00M991395	AFP0042	FW pulley
F00M992723	AFP3018	FW pulley
F00M992725	AFP0041	FW pulley
F00MA45210	ARE0060	Regulator
F00MA45223	ARE0074	Regulator
F00MA45303	ARE0008	Regulator
F00MA47701	AFP0028	FW pulley
F00MA47704	AFP0041	FW pulley
F00MAL1100	SD0092	Drive
F00SH0125	SS0013	Starter solenoid
F00SH0131	SS0013	Starter solenoid
F010AL1014	SA0037	Starter armature

BOSCH	AS	PRODUCT
F010LD1120	AFP0024	FW pulley
F010RS0201	ARE0037	Regulator
R007042024	S0046	Starter
SD0119	SD0108	Drive
for 0121615002	ABEC0008	Bearing cover

BRIGGS STRATTON	AS	PRODUCT
390838	S9025	Starter
391135	SD9035	Drive
391423	S9025	Starter
392749	S9025	Starter
393017	S9028	Starter
394674	S9028	Starter
394805	S9025	Starter
394808	S9028	Starter
398003	SD9035	Drive
399928	S9026	Starter
490240	S9027	Starter
494148	S9027	Starter
494198	S9027	Starter
495100	S9026	Starter
497401	S9027	Starter
497594	S9025	Starter
497595	S9025	Starter
497596	S9028	Starter
497605	SBH9006	S. Brush holder
497606	SD9034	Drive
498148	S9026	Starter
691293	SBH9006	S. Brush holder
692024	SD9035	Drive
for 497401	SBU9052	Bushing

BUTEC	AS	PRODUCT
850037	ABE9004	Bearing
850058	ABE9038	Bearing
850363	SD0028	Drive
850629	SD0029	Drive
850758	SD0028	Drive
850760	SD0029	Drive
852758	SD0028	Drive
852760	SD0029	Drive
852957	SD0028	Drive
852959	SD0029	Drive
852962	SD1003	Drive
854319	ABE9003	Bearing
854323	ABE9040(NSK)	Bearing
856309	ABE9001	Bearing
856310	ABE9021	Bearing
858442	S1001	Starter
858450	S1001	Starter
858506	S1001	Starter
859022	S0196	Starter
859820	A0001	Alternator
MS1/411AZ	S1001	Starter

CARGO	AS	PRODUCT
110113	A0017	Alternator
110117	A0102	Alternator
110149	S5014	Starter
110158	S5002	Starter
110168	A2036	Alternator
110206	S0001	Starter
110207	S0063	Starter
110208	S0007	Starter
110210	S0003	Starter
110211	S0061	Starter
110212	S0220(BOSCH)R	Starter
110214	S0010	Starter
110221	S1002	Starter
110260	S6009	Starter
110347	S1009	Starter
110351	S9008	Starter
110352	S0128	Starter
110358	A0069	Alternator
110363	S0046	Starter
110365	S4033	Starter
110385	A5028	Alternator
110389	S6002	Starter
110394	S5016	Starter
110397	S6013	Starter
110403	S2015	Starter
110439	S4018	Starter
110441	S4009	Starter
110443	S4011	Starter
110459	S4012	Starter
110461	S4007	Starter
110462	S4004	Starter
110465	S4006	Starter
110479	S6017	Starter
110490	S6010	Starter
110497	A4036	Alternator
110499	A1007	Alternator
110511	S9067	Starter
110512	S0151	Starter
110517	S4021	Starter
110518	S0092	Starter
110521	S4023	Starter
110522	S0110	Starter
110523	S0068	Starter
110524	S0002	Starter
110525	S0067	Starter
110527	S0197	Starter
110529	S0116	Starter
110530	S0114	Starter
110532	S0008	Starter
110535	S0011	Starter
110536	S0115	Starter
110545	S4010	Starter
110556	S9005	Starter
110562	A9027	Alternator
110564	A6020	Alternator
110565	S4005	Starter
110572	S5021	Starter
110575	S2015	Starter
110576	S5008	Starter
110580	S6027	Starter
110582	S0221(BOSCH)R	Starter
110584	S3005	Starter
110585	S3015	Starter
110587	S0004	Starter
110619	A3020	Alternator
110620	A6022R	Alternator
110622	A9015	Alternator
110627	S6003	Starter
110631	A2031	Alternator
110634	S9025	Starter
110635	S9028	Starter
110641	A0004	Alternator
110656	S9034	Starter
110657	A9025	Alternator
110682	A6017	Alternator
110697	A2028	Alternator
110700	A2012	Alternator
110723	S2003	Starter
110744	A3045	Alternator
110766	A0030	Alternator
110767	A0098	Alternator
110768	A3049	Alternator
110775	S0219(BOSCH)R	Starter
110800	A9024	Alternator
110804	A5027	Alternator
110806	A5006	Alternator
110808	S5012	Starter
110809	S5005	Starter
110811	S5020	Starter
110813	S0152	Starter
110818	S4014	Starter
110819	S4001	Starter
110820	S2006	Starter
110839	S0217	Starter
110847	S0034	Starter
110865	S0050	Starter
110866	S3014	Starter
110889	A3001	Alternator
110890	A4039	Alternator
110891	A4012	Alternator
110895	A0001	Alternator
110905	A3009	Alternator
110906	A0097	Alternator
110919	A0091	Alternator
110944	S6025	Starter
110964	S9044	Starter
110977	A4037	Alternator
110980	S0108	Starter
110981	S0023	Starter
110990	A0103	Alternator
110994	S0038	Starter
110999	S1006	Starter
111000	S1001	Starter
111001	S0113	Starter
111003	S0134	Starter
111009	A9030R	Alternator
111010	S0015	Starter
111013	S9021	Starter
111015	S3045	Starter
111020	S9006	Starter
111025	S4039	Starter
111032	A4051	Alternator
111034	S1003	Starter
111036	A4063	Alternator
111047	S3042	Starter
111051	A9028	Alternator
111059	S0072	Starter
111060	S0045	Starter
111061	S0077	Starter
111070	S0084	Starter
111075	A3013	Alternator
111078	A4081	Alternator

CARGO	AS	PRODUCT
111079	A0094	Alternator
111093	A0031	Alternator
111108	S5010	Starter
111113	S0132	Starter
111115	S0236	Starter
111120	S0043	Starter
111123	S0088	Starter
111129	S3031	Starter
111130	S3009	Starter
111131	S0247	Starter
111141	A0020	Alternator
111144	A3046	Alternator
111146	A0087	Alternator
111157	A0110	Alternator
111163	A3007	Alternator
111166	A0134	Alternator
111171	A3002	Alternator
111176	A4013	Alternator
111180	A0012	Alternator
111186	A2005	Alternator
111187	A2020	Alternator
111201	S9047	Starter
111214	S9010	Starter
111219	S0009	Starter
111222	S1012	Starter
111231	S0022	Starter
111235	A2026	Alternator
111237	A5036	Alternator
111238	A5014	Alternator
111241	S5019	Starter
111251	S3004	Starter
111264	A2024	Alternator
111267	A2004	Alternator
111272	S5004	Starter
111282	A4079	Alternator
111285	A5026	Alternator
111287	A0086	Alternator
111291	A2027	Alternator
111292	A0148	Alternator
111293	A0152	Alternator
111294	A2009	Alternator
111307	S3053	Starter
111309	A9009	Alternator
111312	S2017	Starter
111314	A5011	Alternator
111316	A2033	Alternator
111318	A0081	Alternator
111319	A3044	Alternator
111321	A3004	Alternator
111324	A3025	Alternator
111325	A3050	Alternator
111330	A3043	Alternator
111331	A3099R	Alternator
111332	S9043	Starter
111335	S3035	Starter
111339	A5018	Alternator
111343	A9010	Alternator
111344	A5007	Alternator
111346	S4019	Starter
111347	S0087	Starter
111348	S5024	Starter
111349	S5015	Starter
111353	A0131	Alternator
111356	A4067	Alternator
111362	A4011	Alternator
111368	A4014	Alternator
111369	A0005	Alternator
111374	S9015	Starter
111381	A2008	Alternator
111387	S6001	Starter
111396	S0028	Starter
111397	A3042	Alternator
111399	S0196	Starter
111400	S0052	Starter
111404	S3050	Starter
111405	A9005	Alternator
111409	A4023	Alternator
111411	A4003	Alternator
111413	A4017	Alternator
111416	A4007	Alternator
111417	A4016	Alternator
111418	A4030	Alternator
111420	S4015	Starter
111422	S4022	Starter
111423	S0204	Starter
111425	S0058	Starter
111426	A1001	Alternator
111437	A6024	Alternator
111451	S5023	Starter
111452	S5025	Starter
111455	S6020	Starter
111459	S2016	Starter
111461	S5006	Starter
111477	A0077	Alternator
111478	A3064	Alternator
111479	A0006	Alternator
111489	S0055	Starter
111490	S0031	Starter
111491	A5012	Alternator
111493	A2010	Alternator
111497	A3095	Alternator
111498	A3041	Alternator
111505	A4069	Alternator
111508	S3013	Starter
111514	A1010	Alternator
111515	A2001	Alternator
111518	A6009	Alternator
111523	S0057	Starter
111528	A0009	Alternator
111534	S2004	Starter
111537	A6032	Alternator
111559	S6022	Starter
111561	S6018	Starter
111568	A4049	Alternator
111569	A4010	Alternator
111579	A6012	Alternator
111581	S6019	Starter
111584	A4057	Alternator
111585	S4033	Starter
111594	A5008	Alternator
111603	A6016	Alternator
111608	S5017	Starter
111614	A2013	Alternator
111619	S0105	Starter
111620	A4065	Alternator
111621	A4063	Alternator
111623	A4001	Alternator
111625	A4025	Alternator
111626	A5017	Alternator
111631	A3059	Alternator
111632	A4022	Alternator
111633	A4078	Alternator
111637	S0235	Starter
111638	S0107	Starter
111640	S0041	Starter
111641	S3007	Starter
111649	A0013	Alternator
111658	A3060	Alternator
111662	A4009	Alternator
111675	A0113	Alternator
111676	A0078	Alternator
111679	S6026	Starter
111680	S0157	Starter
111683	S6004	Starter
111684	S1014	Starter
111685	S0241	Starter
111687	A4047	Alternator
111688	A4060	Alternator
111689	A4004	Alternator
111690	S2002	Starter
111691	S4002	Starter
111693	S0111	Starter
111694	S0039	Starter
111696	S5040	Starter
111698	S0126	Starter
111699	S1010	Starter
111704	A2007	Alternator
111708	A1003	Alternator
111712	A1006	Alternator
111718	A3028	Alternator
111719	A3092	Alternator
111720	A3018	Alternator
111721	A3090	Alternator
111723	A4052	Alternator
111730	S5037	Starter
111732	A0116	Alternator
111733	A0048	Alternator
111737	S4013	Starter
111740	A4040	Alternator
111742	A4002	Alternator
111746	A0008	Alternator
111748	S0062	Starter
111749	S0033	Starter
111752	S9046	Starter
111755	S0112	Starter
111756	A4020	Alternator
111760	S1007	Starter
111763	S2018	Starter
111767	A2032	Alternator
111771	S0019	Starter
111786	S1008	Starter
111788	A3076	Alternator
111793	S0198	Starter
111795	A4035	Alternator
111797	A5002	Alternator
111802	A4006	Alternator

CARGO	AS	PRODUCT
111803	A4008	Alternator
111805	S2005	Starter
111806	A5016	Alternator
111817	S0233	Starter
111820	A0080	Alternator
111821	S0239	Starter
111824	A0225	Alternator
111829	A0129	Alternator
111831	A2016	Alternator
111833	A0021	Alternator
111834	A0058	Alternator
111842	A0022	Alternator
111843	A0082	Alternator
111846	A1002	Alternator
111847	A9004	Alternator
111848	S0098	Starter
111849	S6016	Starter
111851	S0026	Starter
111855	S0066	Starter
111865	S0106	Starter
111868	S0240	Starter
111872	A5001	Alternator
111873	A0157	Alternator
111875	A0161	Alternator
111876	A0130	Alternator
111880	A0079	Alternator
111886	A0029	Alternator
111888	A0018	Alternator
111892	A0151	Alternator
111894	A0177	Alternator
111898	A0186	Alternator
111899	A0019	Alternator
111900	S0025	Starter
111902	A0173	Alternator
111903	A0172	Alternator
111904	S0094	Starter
111906	S0096	Starter
111909	S0027	Starter
111910	S0024	Starter
111911	S0044	Starter
111913	S5003	Starter
111929	A2002	Alternator
111931	S3020	Starter
111932	A3091	Alternator
111938	A3010	Alternator
111943	A3082	Alternator
111967	A3058	Alternator
111971	S5033	Starter
111974	A3065	Alternator
111978	A0135	Alternator
111979	A0133	Alternator
111982	S0037	Starter
111984	S0238	Starter
111987	A0023	Alternator
111988	A0118	Alternator
111989	A0027	Alternator
111991	A0119	Alternator
111993	A5026	Alternator
111994	S3019	Starter
111995	S0176	Starter
111996	S0018	Starter
111998	A0174	Alternator
112000	A0112	Alternator
112002	A0059	Alternator
112003	S2011	Starter
112005	S0048	Starter
112014	S0169	Starter
112021	A4032	Alternator
112026	S4017	Starter
112029	S4034	Starter
112034	S0209	Starter
112037	S0170	Starter
112043	A0040	Alternator
112045	A0178	Alternator
112052	S0142	Starter
112053	S0017	Starter
112055	S0160	Starter
112056	A0115	Alternator
112059	A3079	Alternator
112071	S0129	Starter
112072	A0061	Alternator
112076	A0025	Alternator
112078	A0060	Alternator
112079	A0127	Alternator
112083	S2010	Starter
112092	A2015	Alternator
112093	A2014	Alternator
112097	A4029	Alternator
112098	A0014	Alternator
112103	S5009	Starter
112113	A3100R	Alternator
112116	S0021	Starter
112117	S0012	Starter
112119	S0065	Starter
112121	A4005	Alternator
112124	S4020	Starter
112125	S0133	Starter
112129	A5004	Alternator
112131	S0083	Starter
112141	S0158	Starter
112142	A4021	Alternator
112143	A4028	Alternator
112144	A0044	Alternator
112149	A0028	Alternator
112151	A9003	Alternator
112159	A0002	Alternator
112160	A1018	Alternator
112162	A3012	Alternator
112165	A1014	Alternator
112169	S1024	Starter
112170	A0185	Alternator
112187	S1024	Starter
112190	A0140	Alternator
112194	A0003	Alternator
112197	A0035	Alternator
112201	A0041	Alternator
112203	A4064	Alternator
112205	A5003	Alternator
112206	S0020	Starter
112218	S3008	Starter
112221	S0049	Starter
112224	S0097	Starter
112226	S0143	Starter
112227	S3034	Starter
112228	A2025	Alternator
112236	S0125	Starter
112237	A4066	Alternator
112242	S9026	Starter
112251	S9001	Starter
112256	S1023	Starter
112271	A2003	Alternator
112272	A2011	Alternator
112274	A0042	Alternator
112286	S3041	Starter
112287	A3029	Alternator
112288	A0101	Alternator
112290	S0161	Starter
112292	A3015	Alternator
112295	S3001	Starter
112299	A3057	Alternator
112302	A0024	Alternator
112304	S9009	Starter
112305	S0056	Starter
112306	S0131	Starter
112307	S0104	Starter
112309	S0030	Starter
112319	S0124	Starter
112320	S2001	Starter
112321	S0054	Starter
112324	A4054	Alternator
112325	A4019	Alternator
112328	A5010	Alternator
112333	A9001	Alternator
112340	S9031	Starter
112341	S1005	Starter
112342	S5047	Starter
112345	A0108	Alternator
112350	A5005	Alternator
112351	A2021	Alternator
112352	A5020	Alternator
112355	A5025	Alternator
112359	A5015	Alternator
112365	S2009	Starter
112370	S5007	Starter
112373	S2019	Starter
112379	S0246	Starter
112382	S4028	Starter
112383	S4027	Starter
112384	A4061	Alternator
112385	A4053	Alternator
112386	A4043	Alternator
112388	S9011	Starter
112397	A0046	Alternator
112399	A0050	Alternator
112402	A0189	Alternator
112404	A0198	Alternator
112406	A0033	Alternator
112407	A0149	Alternator
112408	A0188	Alternator
112412	A0056	Alternator
112413	A0162	Alternator
112415	A0052	Alternator
112416	A1011	Alternator
112417	A0171	Alternator
112419	A0158	Alternator
112422	A0071	Alternator

CARGO	AS	PRODUCT
112423	A0121	Alternator
112425	A0169	Alternator
112426	A0226	Starter
112427	A0136	Alternator
112428	A0205R	Alternator
112429	S0248	Starter
112431	S0141	Starter
112433	S0095	Starter
112434	S0154	Starter
112435	S0032	Starter
112436	S0089	Starter
112437	S0109	Starter
112438	S0224	Starter
112439	S0042	Starter
112440	S0091	Starter
112441	S0099	Starter
112443	S0234	Starter
112444	S0212	Starter
112446	S0078	Starter
112453	A0107	Alternator
112454	S0166	Starter
112457	A5009	Alternator
112458	A3073	Alternator
112460	A3027	Alternator
112461	A3051	Alternator
112462	A3072	Alternator
112464	A3030	Alternator
112468	A3094	Alternator
112471	A3037	Alternator
112474	S3058R	Starter
112475	S3024	Starter
112480	A3023	Alternator
112488	S9018	Starter
112494	S0079	Starter
112496	S0208	Starter
112498	S0082	Starter
112529	A0114	Alternator
112533	S0093	Starter
112534	S0188	Starter
112537	S0047	Starter
112541	S0183	Starter
112555	S0174	Starter
112561	A0007	Alternator
112563	S9027	Starter
112581	S0076	Starter
112629	A1008	Alternator
112648	A4076	Alternator
112654	A4045	Alternator
112679	A3089	Alternator
112680	A0153	Alternator
112681	A3019	Alternator
112687	A3062	Alternator
112688	A3022	Alternator
112696	A3031	Alternator
112698	A4031	Alternator
112700	A0156	Alternator
112701	A3040	Alternator
112703	A3096	Alternator
112709	A0117	Alternator
112710	A0128	Alternator
112711	A3024	Alternator
112712	A0096	Alternator
112715	A3088	Alternator
112718	A4033	Alternator
112720	A1009	Alternator
112723	A0051	Alternator
112726	A3047	Alternator
112729	A0093	Alternator
112734	A0015	Alternator
112736	A0084	Alternator
112741	A0092	Alternator
112744	A3048	Alternator
112745	A0179	Alternator
112746	A0104	Alternator
112747	A0203	Alternator
112748	A0070	Alternator
112756	A3006	Alternator
112757	A0026	Alternator
112765	A0106	Alternator
112769	A3008	Alternator
112777	A0111	Alternator
112778	A0105	Alternator
112784	A0099	Alternator
112791	A3038	Alternator
112793	A3016	Alternator
112795	A3014	Alternator
112798	A0095	Alternator
112800	A3075	Alternator
112803	A0010	Alternator
112818	S0059	Starter
112820	S0051	Starter
112821	S9002	Starter
112822	S6023	Starter
112823	S6005	Starter
112911	S1002	Starter
112939	A9002	Alternator
112968	A2034	Alternator
113007	S1019	Starter
113123	S1022	Starter
113125	S1021	Starter
113126	S1020	Starter
113129	S5013	Starter
113130	S9012	Starter
113134	S0127	Starter
113153	S1016	Starter
113155	A1017	Alternator
113181	S0101	Starter
113182	S0081	Starter
113187	A0212	Alternator
113188	A0074	Alternator
113195	S5011	Starter
113210	S5052	Starter
113246	A3056	Alternator
113247	A3053	Alternator
113248	A3035	Alternator
113249	A3063	Alternator
113250	A5024	Alternator
113251	A3085R	Alternator
113252	A3033	Alternator
113253	A3101	Alternator
113254	S3016	Starter
113255	S3012	Starter
113256	S3039	Starter
113260	A3077	Alternator
113261	S3049	Starter
113267	S3036	Starter
113269	S9023	Starter
113270	A0075	Alternator
113271	S0168	Starter
113272	A0049	Alternator
113273	A0196	Alternator
113274	A0218	Alternator
113277	S0080	Starter
113278	A0034	Alternator
113282	S0136	Starter
113283	A3054	Alternator
113284	A0120	Alternator
113285	A0043	Alternator
113289	A0073	Alternator
113290	A0085	Alternator
113294	A0217	Alternator
113295	A0175	Alternator
113298	A0068	Alternator
113300	A0144	Alternator
113302	A0067	Alternator
113303	S0155	Starter
113304	A0219	Alternator
113317	A2006	Alternator
113318	S5043	Starter
113327	S6008	Starter
113328	A9035	Alternator
113329	S6024	Starter
113331	A9018	Alternator
113336	A4034	Alternator
113337	A4077	Alternator
113349	A1005	Alternator
113350	A1004	Alternator
113351	A0053	Alternator
113352	A0047	Alternator
113356	S9041	Starter
113371	A2006	Alternator
113380	S4008	Starter
113383	A2035	Alternator
113387	S0005	Starter
113389	S0144	Starter
113405	A3032	Alternator
113406	A3083	Alternator
113407	A3087	Alternator
113430	S0195	Starter
113438	A3039	Alternator
113439	A2029	Alternator
113445	S5026	Starter
113446	S4035	Starter
113447	A0197	Alternator
113448	A0011	Alternator
113451	S0064	Starter
113464	S0145	Starter
113466	S0075	Starter
113468	S0040	Starter
113470	A0088	Alternator
113471	A4018	Alternator
113472	A4044	Alternator
113481	S3052	Starter
113485	A0163	Alternator
113486	A0187	Alternator
113500	A3003	Alternator

CARGO	AS	PRODUCT
113517	A9017	Alternator
113518	A9006	Alternator
113531	A0089	Alternator
113535	A4058	Alternator
113550	S1011	Starter
113552	A9031	Alternator
113560	S5051	Starter
113587	S0035	Starter
113599	A4046	Alternator
113603	A3017	Alternator
113605	S3030	Starter
113608	S0071	Starter
113609	S0074	Starter
113611	A0109	Alternator
113613	S0102	Starter
113624	A4080	Alternator
113640	A0142	Alternator
113654	S4029	Starter
113655	S4030	Starter
113657	A9008	Alternator
113662	S6007	Starter
113672	S5027	Starter
113673	S5022	Starter
113675	S2008	Starter
113676	S5055	Starter
113678	S0214	Starter
113680	S2020	Starter
113684	A4075	Alternator
113697	A2030	Alternator
113698	A2037	Alternator
113720	A3078	Alternator
113721	A3104	Alternator
113722	A4074	Alternator
113751	A3108	Alternator
113760	S0178	Starter
113771	A1016R	Alternator
113772	A1015R	Alternator
113791	A9029	Alternator
113794	S9004	Starter
113810	S6029	Starter
113820	S5054	Starter
113821	S9039	Starter
113841	S0243	Starter
113846	S0148	Starter
113849	A6018	Alternator
113851	S5049	Starter
113858	A0221	Alternator
113859	S0173	Starter
113871	A0216	Alternator
113878	A0195	Alternator
113880	A3102	Alternator
113882	A3109	Alternator
113896	A3098R	Alternator
113908	S9036	Starter
113917	S1018	Starter
113952	A5033	Alternator
113987	A4050	Alternator
130013	ARE0031	Regulator
130062	SA0043	Starter armature
130101	AS0002	Stator
130105	AS0006	Stator
130115	SA0015	Starter armature
130116	SA0014	Starter armature
130119	SA0013	Starter armature
130120	SA0009	Starter armature
130127	SF0001	Starter field coil
130128	SF0002	Starter field coil
130131	SF0003	Starter field coil
130200	SA4005	Starter armature
130301	SS0003	Starter solenoid
130302	SS0015	Starter solenoid
130303	SS0004	Starter solenoid
130304	SS0001	Starter solenoid
130305	SS0031	Starter solenoid
130317	SD0104	Drive
130319	SA0012	Starter armature
130320	SA0010	Starter armature
130393	SD0118	Drive
130396	SD0001	Drive
130404	SD0002	Drive
130405	SD0139	Drive
130409	SD0003	Drive
130412	SD0105	Drive
130414	SD0004	Drive
130415	SD0114	Drive
130418	SD0005	Drive
130419	SD0006	Drive
130441	SD6001	Drive
130442	SD6002	Drive
130445	SD4036	Drive
130447	SD4001	Drive
130452	SD4002	Drive
130453	SD4003	Drive
130465	SD1001	Drive
130468	SS0057	Starter solenoid
130475	SS0005	Starter solenoid
130476	SS0006	Starter solenoid
130493	SS9021	Starter solenoid
130495	SF1001	Starter field coil
130499	SS1001	Starter solenoid
130500	SS1002	Starter solenoid
130510	ARE1002	Regulator
130517	ARC9001	Rectifier
130537	SD1002	Drive
130539	SD1003	Drive
130540	SD1004	Drive
130551	SA1001	Starter armature
130553	SA1004	Starter armature
130554	SA1003	Starter armature
130555	ARC1012	Rectifier
130592	ARE0015	Regulator
130597	ARC0045	Rectifier
130602	ARC0004	Rectifier
130603	ARC0003	Rectifier
130643	ARC4010	Rectifier
130650	ARC4023	Rectifier
130652	ARE4009	Regulator
130657	ARE3004	Regulator
130661	ARE3003	Regulator
130668	ARE1001	Regulator
130672	ARD9059	Diode
130673	ARC1007	Rectifier
130674	ARC1001	Rectifier
130676	ARE0001	Regulator
130685	SBH0016	S. Brush holder
130703	ABH4002	A. Brush holder
130704	ABH4001	A. Brush holder
130712	ABH1001	A. Brush holder
130738	SD4004	Drive
130741	SD5001	Drive
130811	SS2001	Starter solenoid
130814	SS6001	Starter solenoid
130833	ARC5020	Rectifier
130834	ARE2002	Regulator
130835	ARE5001	Regulator
130849	ARE3017	Regulator
130855	SS4005	Starter solenoid
130878	SA4013	Starter armature
130912	ARD9005	Diode
130923	SA1002	Starter armature
130930	SD0007	Drive
130931	SD0008	Drive
130932	SD0009	Drive
130937	ARD9001	Diode
130950	SD0010	Drive
130958	ARE0002	Regulator
130960	ARE0027	Regulator
130963	SS1016	Starter solenoid
130973	ABH1002	A. Brush holder
131019	SD0011	Drive
131042	SS0007	Starter solenoid
131044	ARE1010	Regulator
131045	AS0003	Stator
131052	AS3003	Stator
131053	SS0008	Starter solenoid
131056	SD1005	Drive
131063	SA0021	Starter armature
131065	SD0012	Drive
131074	SF0004	Starter field coil
131075	SA0017	Starter armature
131084	SS6002	Starter solenoid
131085	SD2018	Drive
131086	SD2017	Drive
131087	SD5002	Drive
131102	SD0013	Drive
131104	SD0014	Drive
131107	SD0015	Drive
131109	SD4005	Drive
131111	SD3001	Drive
131112	SS4003	Starter solenoid
131115	SS4004	Starter solenoid
131119	SS1017	Starter solenoid
131120	ARE3048	Regulator
131132	SA4011	Starter armature
131134	SF0015	Starter field coil
131141	SS0009	Starter solenoid
131143	SS0011	Starter solenoid
131144	SS2002	Starter solenoid
131146	ARE3011	Regulator
131150	SD0016	Drive
131164	ARC3003	Rectifier
131170	SD3002	Drive
131171	SS3001	Starter solenoid
131184	SBH0001	S. Brush holder
131185	SBH0002	S. Brush holder
131189	SS0053	Starter solenoid

CARGO	AS	PRODUCT
131200	AP0001	Pulley
131207	SD0017	Drive
131209	ARE9001	Regulator
131212	SD9001	Drive
131219	ASL9016	Slip ring
131221	ARC5017	Rectifier
131222	ARE3018	Regulator
131224	ARE3001	Regulator
131228	ARC3001	Rectifier
131248	SS4006	Starter solenoid
131267	SD0018	Drive
131270	SD0019	Drive
131271	SD0020	Drive
131272	SS1011	Starter solenoid
131273	SS1012	Starter solenoid
131277	ARE4001	Regulator
131283	ARE4003	Regulator
131286	ARE4006	Regulator
131287	ARE2003	Regulator
131289	ARE5032	Regulator
131290	ARE5002	Regulator
131294	ARD9004	Diode
131297	ARE0071	Regulator
131300	ARE3013	Regulator
131304	ARC4002	Rectifier
131309	SA0016	Starter armature
131311	SA0001	Starter armature
131312	SF0005	Starter field coil
131314	SF0006	Starter field coil
131315	SP0001	Solenoids parts
131318	SP0003	Solenoids parts
131319	SP0009	Solenoids parts
131337	SP0002	Solenoids parts
131340	ARE0032	Regulator
131343	SD3003	Drive
131344	SD0021	Drive
131346	SBH1002	S. Brush holder
131349	SS1003	Starter solenoid
131350	SA1008	Starter armature
131351	SF1002	Starter field coil
131352	SBH1001	S. Brush holder
131354	SA1005	Starter armature
131359	SA1007	Starter armature
131361	SS1015	Starter solenoid
131363	SS1014	Starter solenoid
131364	SS1004	Starter solenoid
131365	SA1006	Starter armature
131369	SS1005	Starter solenoid
131370	SS9003	Starter solenoid
131371	SS9004	Starter solenoid
131372	SS9006	Starter solenoid
131373	SS9005	Starter solenoid
131391	ARC4008	Rectifier
131421	ARC9002	Rectifier
131422	ARC9005	Rectifier
131430	ARC9006	Rectifier
131431	SS2004	Starter solenoid
131432	SD0022	Drive
131433	SD0023	Drive
131434	SD0024	Drive
131435	SA0019	Starter armature
131458	ARC1025	Rectifier
131459	ARE6001	Regulator
131460	ARE6003	Regulator
131468	ARC0007	Rectifier
131470	SA4018	Starter armature
131471	ARE5006	Regulator
131472	SA4009	Starter armature
131475	SD0025	Drive
131481	SD1020	Drive
131489	SD0026	Drive
131503	SG0001	Starter gear
131505	ARC4009	Rectifier
131521	ARE5014	Regulator
131523	ARE5005	Regulator
131524	ARE5004	Regulator
131542	ARC5018	Rectifier
131543	ARC5015	Rectifier
131545	ARC5022	Rectifier
131559	ARC0002	Rectifier
131566	ARC3036	Rectifier
131568	ARC3026	Rectifier
131569	ARC3025	Rectifier
131570	ARC3019	Rectifier
131573	ARC3017	Rectifier
131584	SS3002	Starter solenoid
131586	SS0010	Starter solenoid
131590	SS1006	Starter solenoid
131597	SD0027	Drive
131598	ARC2001	Rectifier
131599	ARC2002	Rectifier
131600	ARC2005	Rectifier
131601	ARC2007	Rectifier
131602	ARC2006	Rectifier
131603	ARC2011	Rectifier
131628	SD5003	Drive
131643	AR4003	Rotor
131648	AS4004	Stator
131663	SA0040	Starter armature
131670	SA4012	Starter armature
131693	ARC4001	Rectifier
131701	ARC3007	Rectifier
131707	SD4038	Drive
131712	SD0152	Drive
131715	SD4006	Drive
131716	SD4007	Drive
131728	SD4037	Drive
131729	SD4008	Drive
131766	SD0028	Drive
131768	SD0029	Drive
131771	SD0030	Drive
131772	SD0031	Drive
131790	SS0024	Starter solenoid
131791	SS0064	Starter solenoid
131793	SS0034	Starter solenoid
131807	SS6003	Starter solenoid
131811	ARE9007	Regulator
131813	SA3002	Starter armature
131814	ASL9001	Slip ring
131815	ASL9002	Slip ring
131817	ASL9003	Slip ring
131826	ABEC3003	Bearing cover
131828	ABEC0006	Bearing cover
131830	SP6010	Solenoids parts
131831	SP6001	Solenoids parts
131832	SP6002	Solenoids parts
131833	SP6018	Solenoids parts
131839	SA0018	Starter armature
131844	AP0002	Pulley
131845	AP0003	Pulley
131846	AP0004	Pulley
131873	ARC1010	Rectifier
131877	ARC1014	Rectifier
131880	ARC1005	Rectifier
131881	ARC1016	Rectifier
131904	ARE1007	Regulator
131905	ARE1003	Regulator
131906	ARE1013	Regulator
131907	ARE9003	Regulator
131915	ABH1003	A. Brush holder
131944	AR4005	Rotor
131948	AR0004	Rotor
131977	AS4001	Stator
131982	AS3006	Stator
131984	SD2001	Drive
131985	SD2002	Drive
131986	SD2003	Drive
131990	SG0002	Starter gear
131991	SG0003	Starter gear
131992	SG0005	Starter gear
131994	SD0032	Drive
131995	SD0033	Drive
131996	SD0034	Drive
131997	SD0035	Drive
131998	SD0036	Drive
131999	SD3004	Drive
132000	SD0037	Drive
132001	SD2004	Drive
132002	SD2005	Drive
132004	SD6003	Drive
132005	SD5004	Drive
132011	SD5005	Drive
132012	SD5006	Drive
132013	SD5007	Drive
132014	SD5008	Drive
132015	SD5009	Drive
132020	SD3005	Drive
132021	SD3006	Drive
132022	SD3007	Drive
132024	SS3005	Starter solenoid
132025	SS3006	Starter solenoid
132027	SA3003	Starter armature
132031	SA0025	Starter armature
132039	ARC5002	Rectifier
132040	ARC5004	Rectifier
132049	SBR0005	Starter bracket
132053	ARC2004	Rectifier
132058	SS2009	Starter solenoid
132059	SS2005	Starter solenoid
132079	SD0038	Drive
132082	ARC6005	Rectifier
132084	ABH6001	A. Brush holder
132090	SBH2004	S. Brush holder
132091	AS0011	Stator
132093	SS2003	Starter solenoid
132094	SS2006	Starter solenoid

CARGO	AS	PRODUCT
132095	SS5008	Starter solenoid
132099	ARC2026	Rectifier
132101	ARE5011	Regulator
132102	ARE5026	Regulator
132103	ARC0019	Rectifier
132111	ARE6016	Regulator
132119	SD4009	Drive
132123	SG0004	Starter gear
132130	ARC5016	Rectifier
132153	SA0023	Starter armature
132158	SA0015	Starter armature
132162	SA0022	Starter armature
132164	SA0020	Starter armature
132167	SD0039	Drive
132168	SD0040	Drive
132169	SD0041	Drive
132177	SD3008	Drive
132186	SD4010	Drive
132187	SD4011	Drive
132188	SD4012	Drive
132194	SD0042	Drive
132204	SD0043	Drive
132205	SD0044	Drive
132216	SD0045	Drive
132219	SBR0002	Starter bracket
132221	SBR0003	Starter bracket
132258	SS0019	Starter solenoid
132262	SS0064	Starter solenoid
132265	SS0062	Starter solenoid
132269	SS4007	Starter solenoid
132273	SD0046	Drive
132275	SP0004	Solenoids parts
132285	SD4013	Drive
132292	ARE2007	Regulator
132299	SS0018	Starter solenoid
132303	SBH0003	S. Brush holder
132306	SBH0004	S. Brush holder
132315	APC4004	Plastic cover
132325	SA0024	Starter armature
132345	SD0047	Drive
132354	AS0004	Stator
132364	SD0048	Drive
132378	AS3004	Stator
132386	SD5024	Drive
132388	SD0049	Drive
132406	ARC2015	Rectifier
132410	ARC2012	Rectifier
132453	SD2006	Drive
132454	SA2002	Starter armature
132456	SA2006	Starter armature
132459	SD2019	Drive
132463	ARC5025	Rectifier
132466	ARC5053	Rectifier
132467	ARC5006	Rectifier
132468	ARC5011	Rectifier
132469	ARC5008	Rectifier
132471	SS5012	Starter solenoid
132472	SS5010	Starter solenoid
132473	SS5009	Starter solenoid
132475	SBH5006	S. Brush holder
132481	SD5010	Drive
132484	SA5005	Starter armature
132486	SA5004	Starter armature
132487	SA5008	Starter armature
132515	SD9015	Drive
132519	SD9012	Drive
132540	ARC6023	Rectifier
132541	ARC6008	Rectifier
132547	SD6004	Drive
132553	SA6002	Starter armature
132558	ABH6003	A. Brush holder
132563	SP6007	Solenoids parts
132565	SP6019	Solenoids parts
132567	SP6016	Solenoids parts
132568	SP6014	Solenoids parts
132585	SF0007	Starter field coil
132586	SD4034	Drive
132591	SS5007	Starter solenoid
132604	SG0005	Starter gear
132619	SA4008	Starter armature
132642	ASL9004	Slip ring
132645	ARE6006	Regulator
132646	ARE6007	Regulator
132665	ARE0014	Regulator
132666	ARE0021	Regulator
132667	ARC0005	Rectifier
132668	ARC0009	Rectifier
132669	ARC0037	Rectifier
132670	ARC0061	Rectifier
132695	SD1014	Drive
132697	SD0106	Drive
132702	SD0050	Drive
132710	SRS0003	Repair set
132718	ARC4005	Rectifier
132720	ARC4003	Rectifier
132721	ARC4004	Rectifier
132731	SD1015	Drive
132737	ARE0037	Regulator
132762	SA5001	Starter armature
132765	SD5011	Drive
132769	ABEC0005	Bearing cover
132789	ARC5001	Rectifier
132791	ARC5003	Rectifier
132792	ARC5054	Rectifier
132793	ARC5038	Rectifier
132796	SA6004	Starter armature
132798	SA2001	Starter armature
132804	ATP4001	Terminal plug
132808	SL0001	Levers
132812	SBH3004	S. Brush holder
132814	SA0027	Starter armature
132815	SA0044	Starter armature
132816	SA0026	Starter armature
132817	SA4001	Starter armature
132818	SD4014	Drive
132819	SD4015	Drive
132821	SD4016	Drive
132827	SS0011	Starter solenoid
132828	SS0067	Starter solenoid
132831	ARE6005	Regulator
132849	SA4007	Starter armature
132852	SD4017	Drive
132855	ARE6008	Regulator
132856	ARE6018	Regulator
132859	ARE6011	Regulator
132860	ARE6009	Regulator
132861	AS6002	Stator
132863	SD6005	Drive
132864	SD6023	Drive
132869	SA6003	Starter armature
132874	SBH6002	S. Brush holder
132903	ARE0005	Regulator
132904	SA0042	Starter armature
132929	ARE1009	Regulator
132931	ARC1022	Rectifier
132934	AS5001	Stator
132936	ARE5029	Regulator
132938	ARC3020	Rectifier
132941	SD9002	Drive
132942	SD6006	Drive
132943	SD1006	Drive
132944	SS1007	Starter solenoid
132974	SD3009	Drive
132976	SS3003	Starter solenoid
132977	SS3004	Starter solenoid
132980	ARE0003	Regulator
132985	ARC3004	Rectifier
132990	ARE2030	Regulator
132991	ARE2012	Regulator
132992	ARE2028	Regulator
132993	ARE2020	Regulator
132995	SBH3005	S. Brush holder
133002	AS3002	Stator
133003	AR3001	Rotor
133030	SA4010	Starter armature
133031	SA2004	Starter armature
133034	SA5003	Starter armature
133044	SS2013	Starter solenoid
133047	SS2014	Starter solenoid
133049	SS5003	Starter solenoid
133052	SS5033	Starter solenoid
133054	SS2010	Starter solenoid
133055	ASL9017	Slip ring
133056	SA2005	Starter armature
133058	SD2015	Drive
133095	ARE0019	Regulator
133096	SS9018	Starter solenoid
133107	SA0011	Starter armature
133138	ARC0006	Rectifier
133148	SP0006	Solenoids parts
133194	ARD9060	Diode
133201	APC4005	Plastic cover
133208	SA0002	Starter armature
133230	SD0051	Drive
133257	ARE6019	Regulator
133261	ARC0022	Rectifier
133265	ARC5007	Rectifier
133266	SD2023	Drive
133268	SD5012	Drive
133288	SS5002	Starter solenoid
133289	SS5005	Starter solenoid
133290	SS9008	Starter solenoid
133308	SRS0016	Repair set
133341	SBH5001	S. Brush holder
133342	SBH5002	S. Brush holder
133362	SD0052	Drive

CARGO	AS	PRODUCT
133378	ARE0016	Regulator
133389	SA6001	Starter armature
133391	SA9002	Starter armature
133393	SD9014	Drive
133401	ASL9005	Slip ring
133402	ASL9006	Slip ring
133417	ARE9018	Regulator
133421	SS0012	Starter solenoid
133424	SS0020	Starter solenoid
133428	SS0014	Starter solenoid
133432	ARC3022	Rectifier
133433	ARC3022	Rectifier
133437	SD2016	Drive
133441	SD6007	Drive
133444	AR0001	Rotor
133448	SD5031	Drive
133449	SD5026	Drive
133454	SD5013	Drive
133456	SG0017	Starter gear
133466	SG0006	Starter gear
133467	SG0007	Starter gear
133486	SA0048	Starter armature
133487	SS0032	Starter solenoid
133492	ARE3014	Regulator
133520	SD5028	Drive
133521	SS5006	Starter solenoid
133526	ARE6017	Regulator
133529	ARE2027	Regulator
133530	ARC0016	Rectifier
133531	SS4017	Starter solenoid
133532	SS3007	Starter solenoid
133533	SS3008	Starter solenoid
133534	SS3009	Starter solenoid
133539	ARC5056	Rectifier
133543	ARE2001	Regulator
133544	ARE2004	Regulator
133554	SS0002	Starter solenoid
133559	AR0003	Rotor
133573	SP0005	Solenoids parts
133581	ARE1016	Regulator
133582	ARE1014	Regulator
133587	AR3008	Rotor
133589	ARE1017	Regulator
133596	SD0053	Drive
133601	SP6003	Solenoids parts
133602	SP6004	Solenoids parts
133604	SRS0006	Repair set
133605	SD2008	Drive
133618	SG4001	Starter gear
133631	SD6008	Drive
133634	SP6005	Solenoids parts
133635	SP6006	Solenoids parts
133646	SBH3001	S. Brush holder
133647	SBH3002	S. Brush holder
133648	ABEC3002	Bearing cover
133664	ARE3022	Regulator
133671	AS6001	Stator
133672	ARC6002	Rectifier
133673	ABH6002	A. Brush holder
133675	SS6004	Starter solenoid
133683	SD4035	Drive
133687	ARC3008	Rectifier
133689	ARC3006	Rectifier
133694	AS4003	Stator
133712	SD6009	Drive
133730	SBH2001	S. Brush holder
133741	ARC3010	Rectifier
133750	SS2008	Starter solenoid
133781	ARE0028	Regulator
133783	ARE3053	Regulator
133805	SD6010	Drive
133809	SS6009	Starter solenoid
133841	SD4018	Drive
133845	AR4001	Rotor
133850	SA1009	Starter armature
133872	ARE6028	Regulator
133886	SBH5005	S. Brush holder
133897	SD3010	Drive
133954	SG3001	Starter gear
133956	ARE4007	Regulator
133961	SD9003	Drive
133993	ARE0004	Regulator
133994	ARC0010	Rectifier
133995	ARC0008	Rectifier
133996	ARC0012	Rectifier
133997	ARC0011	Rectifier
133998	ARC0063	Rectifier
134002	ARC0020	Rectifier
134003	ARC0023	Rectifier
134026	ARE5033	Regulator
134027	ARC5010	Rectifier
134036	ABR4008	Bracket
134037	ABR4015	Bracket
134071	SA5006	Starter armature
134088	ARE5016	Regulator
134098	ARC3009	Rectifier
134103	SBH0005	S. Brush holder
134104	SBH0006	S. Brush holder
134105	SL3001	Levers
134121	SA2003	Starter armature
134129	ABR0001	Bracket
134282	SD0054	Drive
134284	SD9030	Drive
134295	ARC5055	Rectifier
134297	ARC5021	Rectifier
134302	SD9028	Drive
134306	ARC6004	Rectifier
134341	ARC0001	Rectifier
134343	ARE1008	Regulator
134344	ARE5015	Regulator
134364	SD4019	Drive
134365	SA4002	Starter armature
134369	SA6005	Starter armature
134371	SD0055	Drive
134404	SBR0019	Starter bracket
134415	ABR4028	Bracket
134417	ABR4030	Bracket
134422	ABR4029	Bracket
134434	SD0056	Drive
134436	SA0058	Starter armature
134447	ARE6004	Regulator
134457	SS4023	Starter solenoid
134475	ARE3002	Regulator
134492	ASL9007	Slip ring
134493	SBR0019	Starter bracket
134494	ARD9046	Diode
134495	ARD9045	Diode
134513	SA3006	Starter armature
134514	SA0032	Starter armature
134515	AS2001	Stator
134518	AP4004	Pulley
134528	SBR0010	Starter bracket
134607	SRS0005	Repair set
134609	ARC0024	Rectifier
134658	SBH0007	S. Brush holder
134659	SBH0008	S. Brush holder
134660	SBH0009	S. Brush holder
134661	SBH0010	S. Brush holder
134667	ABR4009	Bracket
134687	ARE0006	Regulator
134700	ARE6010	Regulator
134736	SA5009	Starter armature
134761	ARE0007	Regulator
134806	SD6025	Drive
134824	SS0017	Starter solenoid
134864	SBR0001	Starter bracket
134868	SBH0011	S. Brush holder
134886	SS4013	Starter solenoid
134887	SA0027	Starter armature
134888	SS4012	Starter solenoid
134890	SS4009	Starter solenoid
134918	SD5014	Drive
134960	SD5015	Drive
134961	SD6011	Drive
134966	SD5027	Drive
134976	APC3001	Plastic cover
134977	ARC9019	Rectifier
135002	SD6012	Drive
135015	SBH0012	S. Brush holder
135021	ARE2015	Regulator
135022	ARE2022	Regulator
135024	ARE2021	Regulator
135027	ARE2014	Regulator
135032	ARE5018	Regulator
135035	ARC2025	Rectifier
135037	ARC2009	Rectifier
135038	ARC2024	Rectifier
135039	ARC2031	Rectifier
135041	ARC5024	Rectifier
135042	ARC5031	Rectifier
135043	ARC6006	Rectifier
135063	SD1007	Drive
135064	ARE5045	Regulator
135072	SG0008	Starter gear
135073	SG0009	Starter gear
135078	SG0010	Starter gear
135079	SG0011	Starter gear
135081	SG3002	Starter gear
135083	SD3011	Drive
135084	SD3012	Drive
135085	SD0057	Drive
135086	SD0058	Drive
135089	SA1010	Starter armature
135091	SD2009	Drive
135098	SA0004	Starter armature
135100	SD4020	Drive

CARGO	AS	PRODUCT
135116	SD0059	Drive
135117	SD4021	Drive
135121	SG4002	Starter gear
135138	AS6003	Stator
135158	ARE2013	Regulator
135171	ABEC3005	Bearing cover
135172	ASL9008	Slip ring
135173	ASL9009	Slip ring
135179	ASL9010	Slip ring
135195	SP0008	Solenoids parts
135215	ARC5009	Rectifier
135229	ARC5039	Rectifier
135231	ARE4002	Regulator
135233	ARE5008	Regulator
135235	SBH0013	S. Brush holder
135237	ABEC0002	Bearing cover
135240	APC0003	Plastic cover
135241	APC0004	Plastic cover
135246	ARC2008	Rectifier
135247	ARC5012	Rectifier
135248	ARC5057	Rectifier
135249	ARC5030	Rectifier
135250	ARC6001	Rectifier
135252	ARC5037	Rectifier
135258	ARC6009	Rectifier
135278	ARC3035	Rectifier
135287	SS2022	Starter solenoid
135293	ARC3021	Rectifier
135318	ARC2018	Rectifier
135321	ARE9031	Regulator
135335	SL4001	Levers
135336	ARE1005	Regulator
135337	ARC1006	Rectifier
135370	SS2015	Starter solenoid
135384	SP6011	Solenoids parts
135385	SP6020	Solenoids parts
135387	SA3007	Starter armature
135388	SG3006	Starter gear
135389	SD3013	Drive
135390	SS3013	Starter solenoid
135407	ABEC0004	Bearing cover
135416	ARC6010	Rectifier
135417	ARC6003	Rectifier
135427	ARC3011	Rectifier
135434	ARE3005	Regulator
135436	APC3002	Plastic cover
135444	ARC0047	Rectifier
135464	SD0060	Drive
135466	ARC2014	Rectifier
135467	SBH5007	S. Brush holder
135503	AR2001	Rotor
135504	AR2002	Rotor
135508	ABEC3001	Bearing cover
135513	ARE3009	Regulator
135518	ARC3012	Rectifier
135533	AS3005	Stator
135547	ARE1004	Regulator
135556	ABR0001	Bracket
135565	SBH4004	S. Brush holder
135567	SD5016	Drive
135590	SS5030	Starter solenoid
135593	SD6013	Drive
135598	SG0016	Starter gear
135601	SG0020	Starter gear
135605	ARC0041	Rectifier
135620	SA4006	Starter armature
135647	SD3014	Drive
135651	SD6014	Drive
135652	SS6005	Starter solenoid
135693	SD9013	Drive
135711	SD4022	Drive
135714	SD0061	Drive
135715	SD0062	Drive
135716	SD0063	Drive
135717	SD4023	Drive
135718	SD2010	Drive
135730	ARE6012	Regulator
135734	ARE6002	Regulator
135737	ARE6013	Regulator
135757	ARC2013	Rectifier
135776	AP0018	Pulley
135784	SF5005	Starter field coil
135788	AS3001	Stator
135797	ARE0014	Regulator
135801	SD0009	Drive
135820	SS3010	Starter solenoid
135832	SA5010	Starter armature
135841	SG0018	Starter gear
135854	ARE9004	Regulator
135856	ARE0022	Regulator
135860	SD0113	Drive
135867	SAP3001	Starter armature part
135878	SS0056	Starter solenoid
135882	ARC5044	Rectifier
135889	SD6015	Drive
135890	ARC0062	Rectifier
135900	ARC5059	Rectifier
135901	ARC5045	Rectifier
135904	AS0007	Stator
135908	ABR0006	Bracket
135912	SBR0011	Starter bracket
135944	AP0005	Pulley
135948	ARC5048	Rectifier
135952	AS5004	Stator
135970	SG0012	Starter gear
135974	SD6028	Drive
135981	P4003	Pomp
135998	AS0005	Stator
136000	ASL9020	Slip ring
136002	ABR0004	Bracket
136006	ABR0003	Bracket
136020	SA0006	Starter armature
136035	SS0025	Starter solenoid
136036	SS0025	Starter solenoid
136037	AS0001	Stator
136049	SBR0015	Starter bracket
136086	SD6016	Drive
136117	AP2001	Pulley
136144	SD2011	Drive
136145	SD5017	Drive
136164	SS4015	Starter solenoid
136196	SA5002	Starter armature
136204	SBH4003	S. Brush holder
136209	ARC9010	Rectifier
136210	ARC9011	Rectifier
136216	ABH9001	A. Brush holder
136228	SD2012	Drive
136230	ARE9005	Regulator
136231	SA0029	Starter armature
136235	ABEC0003	Bearing cover
136248	SA2008	Starter armature
136249	SA2011	Starter armature
136250	SRS0001	Repair set
136252	SRS0001	Repair set
136255	SS3004	Starter solenoid
136257	SD4024	Drive
136262	AS2002	Stator
136267	SD9004	Drive
136270	SS9007	Starter solenoid
136299	SD5018	Drive
136305	ASL9011	Slip ring
136324	ARC4006	Rectifier
136326	SS5002	Starter solenoid
136334	SA5011	Starter armature
136342	SD1008	Drive
136346	AS0008	Stator
136351	AP3007	Pulley
136353	SBR0009	Starter bracket
136360	AR0008	Rotor
136364	AP3001	Pulley
136371	SS0035	Starter solenoid
136372	ARC0028	Rectifier
136374	SP6008	Solenoids parts
136387	AR0006	Rotor
136395	APC0005	Plastic cover
136418	SBH0034	S. Brush holder
136423	ARC4014	Rectifier
136425	SD0153	Drive
136430	APC4001	Plastic cover
136432	ARE4004	Regulator
136440	ABR0002	Bracket
136457	ARE4008	Regulator
136458	ARC4012	Rectifier
136472	SD0140	Drive
136482	ARC0051	Rectifier
136509	SD0064	Drive
136545	ARE0024	Regulator
136546	ARE3006	Regulator
136549	ARE5030	Regulator
136554	ARE0049	Regulator
136555	ARE0050	Regulator
136557	SBH0020	S. Brush holder
136559	SBH0019	S. Brush holder
136581	ARC0038	Rectifier
136591	ARC0039	Rectifier
136595	ARC1002	Rectifier
136596	APC1001	Plastic cover
136599	ABH1004	A. Brush holder
136601	AP3002	Pulley
136602	SD5019	Drive
136614	SD0124	Drive
136615	SS0037	Starter solenoid
136632	SS9001	Starter solenoid
136633	SD9016	Drive
136634	SA9003	Starter armature
136635	SBH9001	S. Brush holder

CARGO	AS	PRODUCT
136636	SL9001	Levers
136638	SG9001	Starter gear
136648	ARE5045	Regulator
136649	ARE5020	Regulator
136650	ARC2017	Rectifier
136662	APC3003	Plastic cover
136674	AR4002	Rotor
136682	ASL9012	Slip ring
136702	AS0012	Stator
136703	ARC0042	Rectifier
136705	APC0001	Plastic cover
136722	SD5020	Drive
136726	ARC5019	Rectifier
136733	ARC5013	Rectifier
136737	ARC0034	Rectifier
136741	ARC6018	Rectifier
136763	SBH3008	S. Brush holder
136783	SA0005	Starter armature
136784	SA0036	Starter armature
136787	SD0065	Drive
136794	SD6017	Drive
136796	SD6018	Drive
136829	AR0002	Rotor
136832	ARC0035	Rectifier
136843	AP0008	Pulley
136852	SS0036	Starter solenoid
136854	SD0066	Drive
136888	SD0067	Drive
136923	SD5030	Drive
136925	SD0068	Drive
136938	SF5002	Starter field coil
136976	ARC2019	Rectifier
136977	ARC5027	Rectifier
136979	ARC5035	Rectifier
136982	AR4004	Rotor
136988	SA0007	Starter armature
137014	ARE2010	Regulator
137015	ARC2023	Rectifier
137016	SRS0003	Repair set
137023	SS9016	Starter solenoid
137048	ARC9009	Rectifier
137052	AS1001	Stator
137053	ABH1005	A. Brush holder
137069	SA0033	Starter armature
137070	SA0031	Starter armature
137075	ARE5010	Regulator
137092	SA2007	Starter armature
137117	ARE0011	Regulator
137119	SA2012	Starter armature
137120	SA2009	Starter armature
137121	SBH2002	S. Brush holder
137152	ARE0035	Regulator
137175	SS0063	Starter solenoid
137182	ARE5034	Regulator
137189	ARE2001	Regulator
137190	SS4010	Starter solenoid
137191	SS4011	Starter solenoid
137218	SD5025	Drive
137231	SD0085	Drive
137257	ARC0031	Rectifier
137258	ARC0046	Rectifier
137259	ARC0056	Rectifier
137266	SS0046	Starter solenoid
137275	SD0154	Drive
137277	SD2020	Drive
137279	SD0069	Drive
137284	SA0034	Starter armature
137293	SD6019	Drive
137304	SA2013	Starter armature
137327	SBR0014	Starter bracket
137331	AR0009	Rotor
137333	ARC0029	Rectifier
137339	SS1008	Starter solenoid
137357	ARE9019	Regulator
137363	SA4014	Starter armature
137370	SS1009	Starter solenoid
137395	ARE6021	Regulator
137396	ARE5003	Regulator
137399	SF3001	Starter field coil
137464	SG0023	Starter gear
137480	SD0070	Drive
137481	SD0071	Drive
137483	SD0072	Drive
137486	ARC5041	Rectifier
137489	ARE3012	Regulator
137491	SS0028	Starter solenoid
137524	ARC3016	Rectifier
137580	AR3005	Rotor
137581	AS3010	Stator
137612	SS0013	Starter solenoid
137613	SS0038	Starter solenoid
137617	SL0002	Levers
137622	SF0009	Starter field coil
137630	SBR0007	Starter bracket
137633	SBR0016	Starter bracket
137643	SD5021	Drive
137671	ARC6016	Rectifier
137693	SS0066	Starter solenoid
137694	ARE3050	Regulator
137696	SS0048	Starter solenoid
137703	SBH0014	S. Brush holder
137720	SS6006	Starter solenoid
137729	SF0012	Starter field coil
137733	SD3015	Drive
137748	ARE5027	Regulator
137750	SBH2005	S. Brush holder
137751	SD6031	Drive
137753	SD6027	Drive
137760	SD1018	Drive
137764	SD5036	Drive
137787	AR0008	Rotor
137790	SS4016	Starter solenoid
137795	SS2016	Starter solenoid
137811	SS9012	Starter solenoid
137812	SG0013	Starter gear
137813	SS5011	Starter solenoid
137826	SS0023	Starter solenoid
137841	ARE2006	Regulator
137849	ARC5034	Rectifier
137860	ARC5050	Rectifier
137861	ARC5032	Rectifier
137874	ARC6013	Rectifier
137878	SS0046	Starter solenoid
137879	SS0016	Starter solenoid
137888	SD0073	Drive
137889	SD0074	Drive
137890	SD0075	Drive
137891	SD0076	Drive
137893	SA0037	Starter armature
137897	SF0017	Starter field coil
137915	SBR0008	Starter bracket
137929	SBH5003	S. Brush holder
137930	SS5028	Starter solenoid
137945	APC3004	Plastic cover
137948	SA2010	Starter armature
137950	SD6026	Drive
137978	SA6007	Starter armature
137981	SD0077	Drive
137982	SS0047	Starter solenoid
138011	SS5031	Starter solenoid
138014	SS6007	Starter solenoid
138037	AR0008	Rotor
138039	AR0005	Rotor
138052	AR1001	Rotor
138056	AS0012	Stator
138069	AP0020	Pulley
138070	AP0011	Pulley
138073	AFP0003	FW pulley
138077	ARC0030	Rectifier
138080	ARC0040	Rectifier
138108	ARE0017	Regulator
138109	ARE0046	Regulator
138116	AR3006	Rotor
138119	ARC4023	Rectifier
138146	ARE6030	Regulator
138164	ARC0026	Rectifier
138170	SS2007	Starter solenoid
138171	ABR4003	Bracket w/stator
138185	ARE9010	Regulator
138188	AS2003	Stator
138189	ARR2002	Regulator + Rectifier
138190	ARR2002	Regulator + Rectifier
138201	SBH0022	S. Brush holder
138203	AFP0004	FW pulley
138204	ARE9006	Regulator
138205	ARC9018	Rectifier
138209	SD1019	Drive
138216	SD1009	Drive
138217	SS1010	Starter solenoid
138222	SD1010	Drive
138233	SD0078	Drive
138236	AFP9002	Cover for pulley
138251	AR0007	Rotor
138254	SA0039	Starter armature
138282	AFP0001	FW pulley
138292	ARE0026	Regulator
138295	AR0007	Rotor
138303	ARC3018	Rectifier
138308	SD0079	Drive
138309	ARE5025	Regulator
138310	ARE0039	Regulator
138311	SS0030	Starter solenoid
138316	SD0121	Drive
138322	SD0080	Drive
138323	SF0010	Starter field coil

CARGO	AS	PRODUCT
138330	SA0008	Starter armature
138334	SA0003	Starter armature
138339	AP0019	Pulley
138340	ARE5035	Regulator
138372	AP2002	Pulley
138376	ARC4007	Rectifier
138377	ARC4016	Rectifier
138387	ARE1011	Regulator
138389	ARC1020	Rectifier
138412	SRS0004	Repair set
138418	SS5013	Starter solenoid
138421	ASL9013	Slip ring
138424	SBH0015	S. Brush holder
138434	SBR4001	Starter bracket
138441	ASL9014	Slip ring
138444	SS4020	Starter solenoid
138456	ABR4019	Bracket w/stator
138473	ABR4002	Bracket
138477	SS4001	Starter solenoid
138496	SS9002	Starter solenoid
138506	ABR4004	Bracket w/stator
138508	ABR4004	Bracket w/stator
138526	SA4004	Starter armature
138531	SS4018	Starter solenoid
138532	SS4002	Starter solenoid
138533	SD4025	Drive
138535	SBH4002	S. Brush holder
138561	SBR4002	Starter bracket
138564	ABR4035	Bracket
138566	SD6020	Drive
138567	SD6021	Drive
138595	AR3006	Rotor
138614	ABH2001	A. Brush holder
138617	ARC2027	Rectifier
138618	SS5020	Starter solenoid
138620	ARC0027	Rectifier
138622	AR5001	Rotor
138623	AS5002	Stator
138638	ARE6032	Regulator
138642	SBH3006	S. Brush holder
138662	ARE6031	Regulator
138663	ARE9013	Regulator
138671	ARE2023	Regulator
138672	SBH6001	S. Brush holder
138674	SA0030	Starter armature
138675	SA6006	Starter armature
138683	SDK0003	Dust Cover Kits
138701	SA2016	Starter armature
138717	ARE2011	Regulator
138718	ARC2022	Rectifier
138727	ARE2017	Regulator
138732	ARC2021	Rectifier
138740	ARE2024	Regulator
138756	ARE0023	Regulator
138789	ARE4005	Regulator
138792	ARC4015	Rectifier
138793	SD4041	Drive
138796	ARE4015	Regulator
138799	ABR4032	Bracket
138800	ARC4007	Rectifier
138802	ARC4013	Rectifier
138807	AFP0002	FW pulley
138808	ARC4002	Rectifier
138814	SS2019	Starter solenoid
138830	SA2015	Starter armature
138849	SA0059	Starter armature
138852	APC4006	Plastic cover
138857	SF3002	Starter field coil
138872	ARE5019	Regulator
138873	ARC5028	Rectifier
138874	SD0081	Drive
138875	SD0107	Drive
138877	SS0021	Starter solenoid
138891	APC4007	Plastic cover
138894	ARE6014	Regulator
138927	SRS0014	Repair set
138948	SD0082	Drive
138951	ABR4005	Bracket
138957	SS2011	Starter solenoid
138958	SD2013	Drive
138960	SA2014	Starter armature
138962	SA5012	Starter armature
138963	SBH5004	S. Brush holder
138964	SA9005	Starter armature
138971	SS0018	Starter solenoid
138985	SD4026	Drive
138987	ARC0015	Rectifier
138991	SG0014	Starter gear
138999	ARE0010	Regulator
139043	ARE5012	Regulator
139044	ARE0012	Regulator
139056	SD0083	Drive
139069	SS0026	Starter solenoid
139071	SRS0007	Repair set
139074	AP4002	Pulley
139075	SS0049	Starter solenoid
139104	SS4022	Starter solenoid
139110	ARE5017	Regulator
139115	SP0007	Solenoids parts
139132	SD2014	Drive
139143	SG0015	Starter gear
139166	SBH2003	S. Brush holder
139195	ARC5052	Rectifier
139202	SS5017	Starter solenoid
139206	SS5002	Starter solenoid
139209	SS1013	Starter solenoid
139212	SS0065	Starter solenoid
139218	ARC4017	Rectifier
139224	SBH3003	S. Brush holder
139269	ARC5040	Rectifier
139281	AFP0005	FW pulley
139292	SRS0015	Repair set
139320	SD3016	Drive
139334	ARE0040	Regulator
139341	SD9005	Drive
139398	SA5013	Starter armature
139402	AR1002	Rotor
139408	SS5014	Starter solenoid
139412	AP4001	Pulley
139434	SA3011	Starter armature
139440	ARE3016	Regulator
139447	AR3007	Rotor
139453	APC3005	Plastic cover
139456	ARE3007	Regulator
139458	SD0084	Drive
139462	APC3006	Plastic cover
139467	ARE1012	Regulator
139468	ARE1020	Regulator
139469	ARE9023	Regulator
139471	SD3017	Drive
139473	SD3018	Drive
139475	ARE3024	Regulator
139477	SD3019	Drive
139478	SD3020	Drive
139481	ARC3015	Rectifier
139482	ARE3008	Regulator
139483	ARC3028	Rectifier
139494	SP6017	Solenoids parts
139506	SD0085	Drive
139513	ARE9008	Regulator
139531	APC4008	Plastic cover
139541	SD5023	Drive
139581	ARC0017	Rectifier
139584	ARE6033	Regulator
139593	SA3005	Starter armature
139614	SS5015	Starter solenoid
139625	SF4001	Starter field coil
139627	SBH4001	S. Brush holder
139646	SA5007	Starter armature
139653	SD6024	Drive
139655	SD4027	Drive
139656	APC0002	Plastic cover
139657	SA0041	Starter armature
139658	SA0047	Starter armature
139668	ARC9012	Rectifier
139669	ARE9002	Regulator
139697	SF0016	Starter field coil
139698	SBH0017	S. Brush holder
139703	SA0038	Starter armature
139710	SD4028	Drive
139784	SS2018	Starter solenoid
139787	SS0049	Starter solenoid
139825	SA5015	Starter armature
139845	SD6022	Drive
139846	SD0086	Drive
139848	SD4029	Drive
139850	SD0087	Drive
139866	ABEC4002	Bearing cover
139872	ARE0062	Regulator
139900	SD4030	Drive
139901	SD4031	Drive
139902	SD4032	Drive
139904	SD3021	Drive
139925	ARE0008	Regulator
139929	ABEC0001	Bearing cover
139932	AP0012	Pulley
139933	ARE0013	Regulator
139954	SD0088	Drive
139956	AS4002	Stator
139967	SS0027	Starter solenoid
139980	ARE2009	Regulator
140003	SBU9001	Bushing
140008	SBU9002	Bushing
140009	SBU9003	Bushing
140010	SBU9004	Bushing
140011	SBU9005	Bushing

CARGO	AS	PRODUCT
140012	SBU9006	Bushing
140014	SBU9035	Bushing
140015	SBU9035	Bushing
140016	SBU9007	Bushing
140017	SBU9008	Bushing
140018	SBU9009	Bushing
140019	SBU9010	Bushing
140025	SBU9011	Bushing
140026	SBU9012	Bushing
140027	SBU9013	Bushing
140036	SBU9027	Bushing
140043	SBU9014	Bushing
140047	SBU9036	Bushing
140048	SBU9029	Bushing
140050	SBU9037	Bushing
140077	ABE9034	Bearing
140079	ABE9001	Bearing
140081	ABE9002	Bearing
140084	ABE9003	Bearing
140087	ABE9004	Bearing
140091	ABE9005	Bearing
140093	ABE9006	Bearing
140105	ABE9007	Bearing
140111	SBU9015	Bushing
140116	ABE9008	Bearing
140175	ABE9040(NSK)	Bearing
140176	ABE9041(NSK)	Bearing
140190	ABE9045	Bearing
140198	ABE9009	Bearing
140200	SBU9028	Bushing
140201	SBU9038	Bushing
140202	SBU9039	Bushing
140204	SBU9040	Bushing
140208	SBU9016	Bushing
140219	ABE9038	Bearing
140222	ABE9010	Bearing
140223	ABE9035	Bearing
140231	ABE9011	Bearing
140232	ABE9012	Bearing
140233	ABE9013	Bearing
140234	ABE9014	Bearing
140235	ABE9015	Bearing
140237	ABE9016	Bearing
140239	ABE9017	Bearing
140242	ABE9045	Bearing
140249	SBU9017	Bushing
140250	SBU9018	Bushing
140251	SBU9019	Bushing
140252	SBU9020	Bushing
140263	ABE9018	Bearing
140271	ABE9019	Bearing
140272	ABE9020	Bearing
140273	ABE9021	Bearing
140278	ABE9040(NSK)	Bearing
140278A	ABE9040(NSK)	Bearing
140311	SBU9031	Bushing
140319	SBU9041	Bushing
140326	SBU9032	Bushing
140334	SB2001	Sta. Brush set
140336	SB2002	Sta. Brush set
140338	SB2003	Sta. Brush set
140340	SB2013	Sta. Brush set
140342	AB2005	Alt. Brush set
140344	AB2006	Alt. Brush set
140347	SB5007	Sta. Brush set
140348	SB5008	Sta. Brush set
140349	SB5001	Sta. Brush set
140350	AB5001	Alt. Brush set
140351	AB5002	Alt. Brush set
140352	AB5003	Alt. Brush set
140354	AB5005	Alt. Brush set
140361	SB6006	Sta. Brush set
140362	SB6001	Sta. Brush set
140363	SB6002	Sta. Brush set
140364	SB6003	Sta. Brush set
140365	AB6001	Alt. Brush set
140368	AB6002	Alt. Brush set
140369	AB6003	Alt. Brush set
140370	AB6004	Alt. Brush set
140371	AB6005	Alt. Brush set
140378	SB2004	Sta. Brush set
140379	SB2005	Sta. Brush set
140380	AB2001	Alt. Brush set
140386	SB5011	Sta. Brush set
140387	SB5002	Sta. Brush set
140396	SB6004	Sta. Brush set
140401	ABE9029	Bearing
140419	ABE9027	Bearing
140420	ABE9028	Bearing
140423	SBU9033	Bushing
140429	SBU9030	Bushing
140434	ABE9030	Bearing
140441	ABE9036	Bearing
140442	ABE9022	Bearing
140443	ABE9023	Bearing
140460	ABE9024	Bearing
140461	ABE9031	Bearing
140462	ABE9026	Bearing
140480	SB4001	Sta. Brush set
140481	SB4002	Sta. Brush set
140491	PSX148-149	Sta. Brush set
140496	SBU9023	Bushing
140497	SBU9024	Bushing
140498	SBU9025	Bushing
140499	SBU9026	Bushing
140502	SBU9039	Bushing
140515	ABE9033	Bearing
140559	SB5009	Sta. Brush set
140560	SB5004	Sta. Brush set
140561	SB5005	Sta. Brush set
140563	SBU9021	Bushing
140567	SB2006	Sta. Brush set
140569	ABE9025	Bearing
140575	AB2002	Alt. Brush set
140576	AB5006	Alt. Brush set
140577	AB5007	Alt. Brush set
140588	ABE9032	Bearing
140595	SB2014	Sta. Brush set
140600	RX457-458	Sta. Brush set
140602	SB6005	Sta. Brush set
140613	LAX82	Alt. Brush set
140656	SBU9042	Bushing
140658	SBU9043	Bushing
140659	SBU9044	Bushing
140731	SBU9050	Bushing
140734	SBU9045	Bushing
140740	SB6007	Sta. Brush set
140744	AB2003	Alt. Brush set
140755	SB1001	Sta. Brush set
140785	SB2007	Sta. Brush set
140786	SB2008	Sta. Brush set
140807	ABE9046	Bearing
140813	SB1002	Sta. Brush set
140814	SB1003	Sta. Brush set
140815	SB1004	Sta. Brush set
140817	AB5009	Alt. Brush set
140818	AB2004	Alt. Brush set
140845	SB9004	Sta. Brush set
140850	SBU9022	Bushing
140850Z	SBU9051	Bushing
140852	SB2009	Sta. Brush set
140856	SBU9046	Bushing
140893	ABE9042(NSK)	Bearing
140897	SB4003	Sta. Brush set
140914	AB4001	Alt. Brush set
140921	SB5006	Sta. Brush set
140933	SB2011	Sta. Brush set
140934	SB2012	Sta. Brush set
140953	SB2010	Sta. Brush set
140954	SB6008	Sta. Brush set
140955	SB9001	Sta. Brush set
140957	ABE9044	Bearing
140963	SB6008	Sta. Brush set
140979	SB9002	Sta. Brush set
140987	SBU9047	Bushing
140988	SBU9048	Bushing
141012	ABE9037	Bearing
141037	SB5003	Sta. Brush set
141045	SB1005	Sta. Brush set
141071	ABE9039	Bearing
141198	SBU9049	Bushing
141225	ABE9043	Bearing
141259	SB5012	Sta. Brush set
142006	SB5010	Sta. Brush set
142075	ABE9024	Bearing
150057	IM0001	Ignition Module
150063	IM1001	Ignition Module
150088	IM4001	Ignition Module
150160	IM5001	Ignition Module
150171	IM0003	Ignition Module
150239	IM1002	Ignition Module
150396	IM0002	Ignition Module
150416	IC9003	Ignition Coil
150505	IC9001	Ignition Coil
150509	IC9002	Ignition Coil
210843	AT0001	Combi tools
210867	SDK0005	Dust Cover Kits
210877	AT0005	Combi tools
210909	AT0002	Combi tools
210948	AT0003	Combi tools
230019	SRS0010	Repair set
230021	SRS0012	Repair set
230022	SRS0009	Repair set
230023	SRS0013	Repair set
230024	SRS0011	Repair set
230043	ARE5040	Regulator

CARGO	AS	PRODUCT
230055	AR2003	Rotor
230065	ARE9015	Regulator
230066	ARE9014	Regulator
230073	SD1011	Drive
230075	ARC0043	Rectifier
230083	AFP0006	FW pulley
230090	ASL9015	Slip ring
230091	SDK0002	Dust Cover Kits
230094	ARC2016	Rectifier
230121	AP0013	Pulley
230130	AS2006	Stator
230143	ABR4020	Bracket w/stator
230144	SD0089	Drive
230172	ABR0005	Bracket
230173	ARC0046	Rectifier
230181	AS0018	Stator
230186	SS1019	Starter solenoid
230221	SP6009	Solenoids parts
230223	ABR4001	Bracket
230224	ABR4017	Bracket
230225	ABR4006	Bracket
230242	ARC0030	Rectifier
230244	SS0026	Starter solenoid
230247	SD2022	Drive
230249	ARE0009	Regulator
230250	SA3001	Starter armature
230259	ARE0007	Regulator
230260	ARE5022	Regulator
230272	AS3012	Stator
230280	SD9006	Drive
230288	AP3005	Pulley
230292	AFP0008	FW pulley
230293	AFP0010	FW pulley
230296	AFP0007	FW pulley
230297	AFP3001	FW pulley
230302	AFP0009	FW pulley
230303	AFP0040	FW pulley
230304	AFP0011	FW pulley
230305	AFP0003	FW pulley
230306	AFP0017	FW pulley
230307	AFP0015	FW pulley
230308	AFP9003	FW pulley
230309	AFP0014	FW pulley
230310	AFP3003	FW pulley
230311	AFP0042	FW pulley
230312	AFP0018	FW pulley
230313	AFP4001	FW Pulley
230314	AFP6004	FW pulley
230315	AFP0016	FW pulley
230323	SS0040	Starter solenoid
230336	SD0034	Drive
230338	SDK0001	Dust Cover Kits
230339	SD0091	Drive
230340	SD0092	Drive
230350	SD0145	Drive
230352	SD0093	Drive
230353	SD3022	Drive
230356	SS0039	Starter solenoid
230360	ARC0044	Rectifier
230371	SA0049	Starter armature
230372	APC4009	Plastic cover
230386	SS0022	Starter solenoid
230391	SBH1003	S. Brush holder
230396	SBH1004	S. Brush holder
230397	SBH9006	S. Brush holder
230400	SD9034	Drive
230433	ARE2031	Regulator
230455	ARE0025	Regulator
230475	AP0021	Pulley
230502	ARE5041	Regulator
230519	AFP0022	FW pulley
230520	AFP0032	FW pulley
230521	AFP2003	FW pulley
230522	AFP3004	FW pulley
230523	AFP3005	FW pulley
230524	AFP3002	FW pulley
230525	AFP6006	FW pulley
230526	AFP1002	FW pulley
230527	AFP1001	FW pulley
230546	SD0094	Drive
230553	SA1011	Starter armature
230593	ARC5049	Rectifier
230604	SA1014	Starter armature
230620	AS0013	Stator
230624	ARE0018	Regulator
230640	ARC0032	Rectifier
230643	ARC5061	Rectifier
230676	APC3007	Plastic cover
230677	APC4002	Plastic cover
230686	ARE3036	Regulator
230722	AR3003	Rotor
230729	ARC0032	Rectifier
230739	SA9001	Starter armature
230741	SBH9002	S. Brush holder
230742	SBR9001	Starter bracket
230757	SD4009	Drive
230790	ARE4011	Regulator
230808	SS4008	Starter solenoid
230809	SS4002	Starter solenoid
230812	ABR4021	Bracket w/stator
230828	SD0095	Drive
230834	SD0096	Drive
230835	SD0097	Drive
230841	SF0018	Starter field coil
230842	ARC9013	Rectifier
230843	SBH0021	S. Brush holder
230849	AR0013	Rotor
230870	ARC9015	Rectifier
230904	SS0029	Starter solenoid
230911	SD1022	Drive
230944	ARE3023	Regulator
230948	APC4010	Plastic cover
230951	AS5003	Stator
230961	SD0157	Drive
230971	AS0016	Stator
230983	ARC1019	Rectifier
230985	ARE5007	Regulator
230990	ARE5024	Regulator
230993	SF0019	Starter field coil
231009	SD0116	Drive
231025	ARC4018	Rectifier
231026	ARC4019	Rectifier
231029	ABR4037	Bracket w/stator
231036	ABR4022	Bracket w/stator
231038	ABR4023	Bracket w/stator
231039	ABR4024	Bracket w/stator
231050	ARC9023	Rectifier
231060	ARE6046	Regulator
231061	ARC1015	Rectifier
231062	ARC1018	Rectifier
231065	SA0053	Starter armature
231073	SD3023	Drive
231079	ARC5042	Rectifier
231080	SA9011	Starter armature
231081	ARC2028	Rectifier
231083	SG0022	Starter gear
231084	SBH0018	S. Brush holder
231085	SF0014	Starter field coil
231092	AFP0043	FW pulley
231093	SD3024	Drive
231094	APC3008	Plastic cover
231097	APC3009	Plastic cover
231098	ARC3031	Rectifier
231101	ARC3038	Rectifier
231103	ARE3010	Regulator
231130	ARE0059	Regulator
231159	SA4003	Starter armature
231178	SS9019	Starter solenoid
231179	SS9020	Starter solenoid
231183	ARE1019	Regulator
231197	ARE6017	Regulator
231200	ARC1006	Rectifier
231238	SBR3001	Starter bracket
231241	ABR4007	Bracket
231242	ABR4018	Bracket
231267	SS0033	Starter solenoid
231272	SA0045	Starter armature
231292	ARE2005	Regulator
231319	ABR4011	Bracket
231341	SD5022	Drive
231346	ABH1006	A. Brush holder
231347	SG9002	Starter gear
231413	SD3025	Drive
231414	SD4033	Drive
231415	SD5034	Drive
231425	ARE9020	Regulator
231430	APC4011	Plastic cover
231442	ARC2032	Rectifier
231451	ARC0050	Rectifier
231454	SS5026	Starter solenoid
231457	SS5029	Starter solenoid
231462	ARE6036	Regulator
231472	ARC9024	Rectifier
231481	SA4019	Starter armature
231491	AS4006	Stator
231493	SA0046	Starter armature
231510	ARE5036	Regulator
231511	AFP4004	FW pulley
231523	ARE0042	Regulator
231524	ARC0048	Rectifier
231534	ARE2019	Regulator
231537	SBR3002	Starter bracket
231584	AFP3018	FW pulley
231593	SBR0017	Starter bracket
231610	SS3019	Starter solenoid
231645	SRS0008	Repair set

CARGO	AS	PRODUCT
231648	SBH0023	S. Brush holder
231663	ARE3045(VALEO)	Regulator
231669	SS3019	Starter solenoid
231679	SD9020	Drive
231680	SA9008	Starter armature
231681	SS9009	Starter solenoid
231696	SBR0004	Starter bracket
231698	APC4012	Plastic cover
231700	APC4003	Plastic cover
231716	ARE0043	Regulator
231726	ARC2015	Rectifier
231736	ARC3021	Rectifier
231750	SBR0006	Starter bracket
231756	SD0101	Drive
231771	SA5014	Starter armature
231772	SF5003	Starter field coil
231789	SD1012	Drive
231795	SD2021	Drive
231796	ARE1006	Regulator
231797	ARC1003	Rectifier
231800	SS1022	Starter solenoid
231812	APC4001	Plastic cover
231820	SS5027	Starter solenoid
231827	ABEC4001	Bearing cover
231857	AP3008	Pulley
231896	SD0115	Drive
231898	SD0098	Drive
231899	SD4039	Drive
231919	SS1020	Starter solenoid
231926	SS1024	Starter solenoid
231927	SS1023	Starter solenoid
231932	SD3027	Drive
231952	SD5039	Drive
231960	SD9029	Drive
231961	SD1021	Drive
231966	SD1013	Drive
231968	SD1017	Drive
231970	SD1016	Drive
231976	SS5001	Starter solenoid
231981	SS5016	Starter solenoid
231982	SS5024	Starter solenoid
231990	SS4019	Starter solenoid
231992	ABR4016	Bracket
231994	ABR4012	Bracket
231996	SS2021	Starter solenoid
232004	SS9015	Starter solenoid
232012	SS3012	Starter solenoid
232172	ARC0018	Rectifier
232183	SBH0028	S. Brush holder
232185	SS0045	Starter solenoid
232193	ARE0052	Regulator
232199	ARC3024	Rectifier
232200	SS2017	Starter solenoid
232229	SD5029	Drive
232267	SA4016R	Starter armature
232415	ARE9012	Regulator
232443	ARE2008	Regulator
232449	ARE5028	Regulator
232452	SS2012	Starter solenoid
232455	ARE6023	Regulator
232481	SD0099	Drive
232487	SS2020	Starter solenoid
232604	SG4003	Starter gear
232623	SD0100	Drive
232624	AFP0021	FW pulley
232628	ARC5032	Rectifier
232632	SD0028	Drive
232665	ARE1027	Regulator
232668	ARC1004	Rectifier
232700	SBH0029	S. Brush holder
232766	AR3002	Rotor
232891	SA1013	Starter armature
232927	ARE0041	Regulator
232962	ARE3028	Regulator
233117	ARE0054	Regulator
233168	SP6013	Solenoids parts
233171	SD1024	Drive
233179	SD6033	Drive
233195	ARC1009	Rectifier
233208	ARC9014	Rectifier
233232	ARE9033	Regulator
233233	ARE9016	Regulator
233246	ARC6017	Rectifier
233317	SBR3003	Starter bracket
233337	SA5017	Starter armature
233387	SD1023	Drive
233447	ARC1021	Rectifier
233449	ABH1007	A. Brush holder
233451	SD6029	Drive
233453	SS6010	Starter solenoid
233454	SS6011	Starter solenoid
233469	ARC0052	Rectifier
233475	SA0052	Starter armature
233484	ARC9020	Rectifier
233497	SG0019	Starter gear
233508	ARE0060	Regulator
233511	ARC5023	Rectifier
233515	ARC5058	Rectifier
233517	ARE6027	Regulator
233518	ARC5043	Rectifier
233525	AS0014	Stator
233530	AFP0044	FW pulley
233557	AS0014	Stator
233565	SBH0030	S. Brush holder
233583	SS0058	Starter solenoid
233587	ARE0045	Regulator
233588	APC0007	Plastic cover
233590	AFP3011	FW pulley
233614	ARC3023	Rectifier
233620	ARC2020	Rectifier
233629	SS0058	Starter solenoid
233633	ARE3020	Regulator
233636	ARE4013	Regulator
233654	APC3010	Plastic cover
233655	APC3011	Plastic cover
233657	AFP0013	FW pulley
233663	SF0013	Starter field coil
233697	SA3009	Starter armature
233698	SA0050	Starter armature
233709	SS5018	Starter solenoid
233713	AS3007	Stator
233716	SS0051	Starter solenoid
233719	SD0103	Drive
233720	SD0129	Drive
233722	SD0109	Drive
233737	ARE1022	Regulator
233746	ARC5029	Rectifier
233762	SS1021	Starter solenoid
233767	SA3008	Starter armature
233775	ARE9017	Regulator
233778	ARC0021	Rectifier
233792	ARC4020	Rectifier
233796	SS0050	Starter solenoid
233797	AFP0014	FW pulley
233828	SD0126	Drive
233829	SD0130	Drive
233830	SD9007	Drive
233835	SD0108	Drive
233836	SD0102	Drive
233837	SD0112	Drive
233841	SD0131	Drive
233845	SD5037	Drive
233847	AFP3010	FW pulley
233852	SS0059	Starter solenoid
233854	AR0012	Rotor
233890	SS9014	Starter solenoid
233922	SF0019	Starter field coil
233937	ASL9018	Slip ring
233947	SD0142	Drive
233948	SD0143	Drive
233949	SD0141	Drive
233960	SA1012	Starter armature
233961	SA5019	Starter armature
233975	ARE1025	Regulator
233989	AFP2001	FW pulley
233990	AFP6007	FW pulley
233993	SD9031	Drive
234024	ABEC9001	Bearing cover
234038	ARE0074	Regulator
234056	AFP0020	FW pulley
234062	SBH9004	S. Brush holder
234086	SD3029	Drive
234087	SD0123	Drive
234088	SD3035	Drive
234091	ARE6034	Regulator
234100	SA5020	Starter armature
234106	SA9004	Starter armature
234109	APC4013	Plastic cover
234112	ARE0053	Regulator
234115	ARE3027	Regulator
234124	SD0137	Drive
234126	SBH0029	S. Brush holder
234127	AFP0029	FW pulley
234135	SD9027	Drive
234141	SD0132	Drive
234149	AFP3013	FW pulley
234150	APC0008	Plastic cover
234158	SD0148	Drive
234160	SS9013	Starter solenoid
234163	SS1018	Starter solenoid
234168	SD0125	Drive
234169	AFP0028	FW pulley
234203	ABR4010	Bracket
234211	SD9035	Drive
234231	SD3031	Drive
234242	SD0110	Drive

CARGO	AS	PRODUCT
234244	SA0051	Starter armature
234247	SD0136	Drive
234266	SF5004	Starter field coil
234270	SD9008	Drive
234273	ARE2036	Regulator
234282	ABR4027	Bracket
234304	ARE5009	Regulator
234305	ARC5047	Rectifier
234307	ARC9016	Rectifier
234311	ARE2016	Regulator
234313	ARE5021	Regulator
234314	ARE2026	Regulator
234327	APC4014	Plastic cover
234333	ARC0049	Rectifier
234375	SG0021	Starter gear
234377	AP3009	Pulley
234387	SG3005	Starter gear
234388	SS3017	Starter solenoid
234389	SS3018	Starter solenoid
234391	SBR3004	Starter bracket
234401	AFP9007	FW pulley
234402	SD6032	Drive
234403	SD0111	Drive
234405	SD0117	Drive
234406	SD0151	Drive
234475	SBH0031	S. Brush holder
234480	ARE9028	Regulator
234504	SD9017	Drive
234514	SD5035	Drive
234522	ARE0056	Regulator
234523	AR0011	Rotor
234533	ARE3032	Regulator
234535	SD0120	Drive
234549	APC0006	Plastic cover
234557	ARE6015	Regulator
234569	AFP3006	FW pulley
234587	AR9002	Rotor
234595	AS9002	Stator
234596	ARC9022	Rectifier
234601	ABR9002	Bracket
234620	ARE5043	Regulator
234627	AP4005	Pulley
234638	ABR4039	Bracket
234654	ARE5044	Regulator
234674	AS3008	Stator
234701	ARE2035	Regulator
234729	AS2005	Stator
234730	ABR4027	Bracket
234732	ARE6035	Regulator
234733	SS4008	Starter solenoid
234770	ARE0057	Regulator
234771	ARE0066	Regulator
234774	SD5032	Drive
234778	SS3016	Starter solenoid
234785	SD0155	Drive
234788	SBH0024	S. Brush holder
234793	AFP0031	FW pulley
234794	AFP3009	FW pulley
234795	AFP0023	FW pulley
234796	AFP0045	FW pulley
234808	SD5033	Drive
234815	AS9001	Stator
234818	ARE3029	Regulator
234819	SD3039	Drive
234820	ARE3044	Regulator
234822	APC3012	Plastic cover
234850	AS4006	Stator
234867	AFP5001	FW pulley
234895	SA0054	Starter armature
234896	SBH0032	S. Brush holder
234898	ABR4025	Bracket w/stator
234908	ARE2018	Regulator
234918	SD3017	Drive
234946	SD0138	Drive
234961	ARE3026	Regulator
234974	SA5022	Starter armature
234982	ARE3030	Regulator
234987	SDK0004	Dust Cover Kits
234996	SD3030	Drive
234999	ARE9032	Regulator
235019	ARC9021	Rectifier
235021	ABR4036	Bracket
235028	ARC1023	Rectifier
235065	SBH9005	S. Brush holder
235071	AFP5003	FW pulley
235079	ARE3037	Regulator
235082	ARE3019	Regulator
235089	AS3014	Stator
235100	SS5035	Starter solenoid
235102	ARE5031	Regulator
235106	SS3021	Starter solenoid
235114	SBR9006	Starter bracket
235119	ABR4031	Bracket
235137	ABR4038	Bracket
235139	ARC9017	Rectifier
235157	AFP9004	FW pulley
235163	APC3013	Plastic cover
235195	AS4008	Stator
235205	ARE9024	Regulator
235207	ARE0058	Regulator
235212	SA0055	Starter armature
235218	ARC0065	Rectifier
235219	AR0015	Rotor
235228	AP5001	Pulley
235229	ARE3047(VALEO)	Regulator
235247	SA5018	Starter armature
235252	SD3041	Drive
235254	APC0009	Plastic cover
235278	ARE5047	Regulator
235290	SD0156	Drive
235324	SA0056	Starter armature
235331	AFP0024	FW pulley
235337	SA2017	Starter armature
235338	AS3011	Stator
235366	AR3004	Rotor
235385	SS5023	Starter solenoid
235424	AFP5002	FW pulley
235439	AFP0034	FW pulley
235440	SD0149	Drive
235450	ARE5038	Regulator
235457	ARE6037	Regulator
235460	ARE0055	Regulator
235465	ARC3032	Rectifier
235476	AFP4005	FW pulley
235478	AFP0030	FW pulley
235479	AFP3012	FW pulley
235480	AFP0035	FW pulley
235494	AFP9006	FW pulley
235498	SG3004	Starter gear
235503	AFP9010	FW pulley
235504	AFP0046	FW pulley
235505	AFP3017	FW pulley
235506	AFP0047	FW pulley
235507	AFP0048	FW pulley
235508	AFP0049	FW pulley
235521	ARC3039	Rectifier
235526	ARC5060	Rectifier
235528	ARE0044	Regulator
235531	SBH0033	S. Brush holder
235535	SS0054	Starter solenoid
235536	ARE0073	Regulator
235541	ARE5048	Regulator
235547	ARE5037	Regulator
235549	ARE0051	Regulator
235552	AS0019	Stator
235564	AR0014	Rotor
235568	ABR3001	Bracket
235569	AS3009	Stator
235580	AS0021	Stator
235600	ABR6001	Bracket w/stator
235601	ARE9026	Regulator
235638	SP6012	Solenoids parts
235649	AFP5009	FW pulley
235652	ARC3029	Rectifier
235654	ARC3030	Rectifier
235655	ARC1024	Rectifier
235657	ARE3054	Regulator
235659	ARE2025	Regulator
235662	SA4015	Starter armature
235663	SD4040	Drive
235665	ARE5042	Regulator
235695	AFP0033	FW pulley
235696	AFP6009	FW pulley
235697	AFP0050	FW pulley
235703	ARE0042	Regulator
235716	AFP0038	FW pulley
235717	AFP0039	FW pulley
235719	AFP4002	FW pulley
235720	AFP0051	FW pulley
235721	AFP0036	FW pulley
235724	SBH0034	S. Brush holder
235725	SA9010	Starter armature
235726	SG9003	Starter gear
235729	ARC2029	Rectifier
235732	AFP0052	FW pulley
235733	AFP0053	FW pulley
235741	SBH0035	S. Brush holder
235756	AS0009	Stator
235800	AFP0062	FW pulley
235812	AFP3020	FW pulley
236002	ARE0074	Regulator
236130	SD0122	Drive
236137	AP3006	Pulley
236238	SD3036	Drive
236270	SD3032	Drive
236306	ARE3039(VALEO)	Regulator

CARGO	AS	PRODUCT
236329	ARE6039	Regulator
236332	AFP6010	FW pulley
236436	SF5001	Starter field coil
236441	SBH5008	S. Brush holder
236473	APC3014	Plastic cover
236477	SD3038	Drive
236530	ABEC0007	Bearing cover
236531	AFP0025	FW pulley
236563	ARE9027	Regulator
236579	ARE4012	Regulator
236597	ARE3034(VALEO)	Regulator
236601	ARE3031	Regulator
236609	SD3034	Drive
236626	SS3015	Starter solenoid
236717	ARE0063	Regulator
236762	AFP0026	FW pulley
236763	AFP6005	FW pulley
236780	SS5032	Starter solenoid
236797	SD3028	Drive
236801	SS3011	Starter solenoid
236832	SD0135	Drive
236883	SD0150	Drive
236995	AFP3008	FW pulley
237003	APC3015	Plastic cover
237090	SS5021	Starter solenoid
237102	SS5019	Starter solenoid
237270	ARE0075(BOSCH)	Regulator
237280	AFP0054	FW pulley
237291	SD3037	Drive
237320	AFP3014	FW pulley
237323	ASL9019	Slip ring
237355	AFP0055	FW pulley
237366	SBH0036	S. Brush holder
237498	SS5025	Starter solenoid
237500	AFP6001	FW pulley
237582	AFP6011	FW pulley
237600	AFP0019	FW pulley
237607	ARC6020	Rectifier
237609	ARE6040	Regulator
237610	AFP6012	FW pulley
237613	ARC6019	Rectifier
237650	ARE6047	Regulator
237667	SD0146	Drive
237670	SBH0025	S. Brush holder
237672	SS0042	Starter solenoid
237674	AFP3007	FW pulley
237736	ARE0076	Regulator
237745	SBR0013	Starter bracket
237747	SS0060	Starter solenoid
237752	SD0128	Drive
237753	SS0041	Starter solenoid
237817	AFP0056	FW pulley
237938	ARE3038	Regulator
237963	APC4015	Plastic cover
237990	SD6030	Drive
238068	AFP5004	FW pulley
238265	ARE4014	Regulator
238339	AFP3015	FW pulley
238626	SD1025	Drive
238690	AFP2002	FW pulley
238691	ARE2032	Regulator
238733	AFP0057	FW pulley
238734	AFP0058	FW pulley
238841	SS4021	Starter solenoid
238843	SA4017	Starter armature
238956	ABH9002	A. Brush holder
239018	AS3013	Stator
239019	ARC3041	Rectifier
239091	SBR0012	Starter bracket
239094	SS0060	Starter solenoid
239096	SBH0026	S. Brush holder
239514	AS3001	Stator
239544	SA3010	Starter armature
239735	ARE5051	Regulator
239737	AS4005	Stator
239769	AS0010	Stator
239823	SS5034	Starter solenoid
239829	SA5021	Starter armature
239832	SL5001	Levers
239885	ARE3052	Regulator
239903	SD0156	Drive
239914	AFP0064	FW pulley
239930	ASL9021	Slip ring
239982	ARC4022	Rectifier
330030	SS0052	Starter solenoid
330063	AFP9011	FW pulley
330091	AS4008	Stator
330104	SD3033	Drive
330113	AR0010	Rotor
330114	AS0015	Stator
330200	AFP3016	FW pulley
330206	AFP3018	FW pulley
330221	AFP6002	FW pulley
330240	AFP5006	FW pulley
330265	SD0144	Drive
330287	AFP6013	FW pulley
330328	AFP0051	FW pulley
330331	ARE0061(BOSCH)	Regulator
330339	AFP5005	FW pulley
330356	AFP0059	FW pulley
330516	AFP5007	FW pulley
330716	AFP0060	FW pulley
330843	ARE6038	Regulator
330850	AFP6014	FW pulley
330895	AFP0027	FW pulley
330921	AFP0041	FW pulley
331002	ARC0064	Rectifier
331651	AFP0067	FW pulley
331925	AFP0061	FW pulley
B134578	SAC0001	Starter commutator
B182	BX182	Alt. Brush set
B185	BX185	Alt. Brush set
B201	BX201	Alt. Brush set
B202	BX202	Alt. Brush set
B204	BX204	Alt. Brush set
B213	BX213	Alt. Brush set
BS102	BSX102	Sta. Brush set
BS134/0	BSX134-144	Sta. Brush set
BS135/0	BSX135-145	Sta. Brush set
BS139	BSX139	Sta. Brush set
BS140/0	BSX140	Sta. Brush set
BS148	BSX148	Sta. Brush set
BS149	BSX149	Sta. Brush set
BS151	BSX151	Sta. Brush set
BS157	BSX157-158	Sta. Brush set
BS158	BSX157-158	Sta. Brush set
BS159	BSX159-160	Sta. Brush set
BS160	BSX159-160	Sta. Brush set
BS175	BSX175-176	Sta. Brush set
BS176	BSX175-176	Sta. Brush set
BS177	BSX177	Sta. Brush set
BS75/0	BSX75	Sta. Brush set
BS96	BSX96	Sta. Brush set
BSX100 4	BSX100	Sta. Brush set
BSX102 4	BSX102	Sta. Brush set
BSX134-144 4	BSX134-144	Sta. Brush set
BSX135-145 4	BSX135-145	Sta. Brush set
BSX137-143 4	BSX137-143	Sta. Brush set
BSX138-142 4	BSX138-142	Sta. Brush set
BSX139 4	BSX139	Sta. Brush set
BSX140 4	BSX140	Sta. Brush set
BSX146 4	BSX146	Sta. Brush set
BSX148	SRS0001	Repair set
BSX148 4	BSX148	Sta. Brush set
BSX1484	SRS0001	Repair set
BSX1494	BSX149	Sta. Brush set
BSX151S 4	BSX151	Sta. Brush set
BSX1544	BSX149	Sta. Brush set
BSX1564	BSX149	Sta. Brush set
BSX157-158 4	BSX157-158	Sta. Brush set
BSX159-160 4	BSX159-160	Sta. Brush set
BSX172-173 4	BSX172-173	Sta. Brush set
BSX175-176 4	BSX161-162	Sta. Brush set
BSX177 4	BSX177	Sta. Brush set
BSX190-191 4	BSX190-191	Sta. Brush set
BSX196 4	BSX196	Sta. Brush set
BSX34	BSX34	Sta. Brush set
BSX34 4	BSX34	Sta. Brush set
BSX75	BSX75	Sta. Brush set
BSX75 4	BSX75	Sta. Brush set
BSX76	BSX76	Sta. Brush set
BSX76 4	BSX76	Sta. Brush set
BSX96	BSX96	Sta. Brush set
BSX96 4	BSX96	Sta. Brush set
BX182 2	BX182	Alt. Brush set
BX185 2	BX185	Alt. Brush set
BX201 2	BX201	Alt. Brush set
BX202 2	BX202	Alt. Brush set
BX204 2	BX204	Alt. Brush set
BX213 2	BX213	Alt. Brush set
IKSX2-3 2	SB9003	Sta. Brush set
J42	JX42	Alt. Brush set
JS21	JSX21-22	Sta. Brush set
JS22	JSX21-22	Sta. Brush set
JS31	JSX31-32	Sta. Brush set
JS32	JSX31-32	Sta. Brush set
JSX21-22	JSX21-22	Sta. Brush set
JSX31-32	JSX31-32	Sta. Brush set
JSX33-34	JSX33-34	Sta. Brush set
JSX33-34 4	JSX33-34	Sta. Brush set
JSX35-36	JSX35-36	Sta. Brush set
JSX35-36 4	JSX35-36	Sta. Brush set
JSX35-37	JSX35-37	Sta. Brush set
JSX35-37 4	JSX35-37	Sta. Brush set

CARGO	AS	PRODUCT
JSX38-39-40 3	JSX38-39-40	Sta. Brush set
JSX38-41 2	JSX38-41	Sta. Brush set
JX42 2	JX42	Alt. Brush set
LASX15-16	LASX15-16	Sta. Brush set
LASX15-16 4	LASX15-16	Sta. Brush set
LASX36	LASX36	Sta. Brush set
LASX36 4	LASX36	Sta. Brush set
MASX17-18	MASX17-18	Sta. Brush set
MASX17-18 4	MASX17-18	Sta. Brush set
P58	PX58	Alt. Brush set
PS115	PSX115-116	Sta. Brush set
PS119	PSX119-120	Sta. Brush set
PS129A	PSX129	Sta. Brush set
PS140/0	PSX140-141	Sta. Brush set
PS144	PSX148-149	Sta. Brush set
PS146	PSX146-147	Sta. Brush set
PSX115-116	PSX115-116	Sta. Brush set
PSX115-116 2	PSX115-116	Sta. Brush set
PSX119-120	PSX119-120	Sta. Brush set
PSX119-120 2	PSX119-120	Sta. Brush set
PSX122-123-124	PSX122-123-124	Sta. Brush set
PSX129 2+1P	PSX129	Sta. Brush set
PSX133 2	PSX133	Sta. Brush set
PSX140-141 4	PSX140-141	Sta. Brush set
PSX142-143 4	PSX142-143	Sta. Brush set
PSX142-144 4	PSX142-144	Sta. Brush set
PSX144-145K	PSX148-149	Sta. Brush set
PSX146-147K	PSX146-147	Sta. Brush set
PSX155 4	PSX155	Sta. Brush set
PSX158 4	PSX158	Sta. Brush set
PSX169-170	PSX169-170	Sta. Brush set
PSX169-170 4	PSX169-170	Sta. Brush set
PSX83-844	PSX83-84	Sta. Brush set
PX58 2	PX58	Alt. Brush set
PX60 2	PX60	Alt. Brush set
R103F	RX103F	Alt. Brush set
RES12488	ARC3040	Rectifier
RX103	RX103	Sta. Brush set
RX103 4	RX103	Sta. Brush set
RX103E 2	RX103	Alt. Brush set
RX103F 2	RX103F	Alt. Brush set
RX122	RX122	Sta. Brush set
RX122 4	RX122	Sta. Brush set
RX122H	RX122H	Sta. Brush set
RX122H 4	RX122H	Sta. Brush set
RX124	RX124	Sta. Brush set
RX124 6	RX124	Sta. Brush set
RX124H	RX124H	Sta. Brush set
RX124H 6	RX124H	Sta. Brush set
RX134	RX134	Sta. Brush set
RX134 4	RX134	Sta. Brush set
RX134H	RX134H	Sta. Brush set
RX134H 4	RX134H	Sta. Brush set
RX58	RX58	Alt. Brush set
RX70	RX70 8	Sta. Brush set
RX70 8	RX70 8	Sta. Brush set
S13-160	S2021	Starter
SV7	SVX7	Alt. Brush set
SVX7 2	SVX7	Alt. Brush set

CASE	AS	PRODUCT
1420000902201	A9031	Alternator
2855914	A0228	Alternator
3055414R92	S9046	Starter
3055557R92	S9046	Starter
3218677R91	S9046	Starter
3228193EX	S9046	Starter
3228193R91	S9046	Starter
3229193EX	S9046	Starter
87326219	A9031	Alternator
A169694	S1024	Starter
A187873	A0018	Alternator
AR89421	SA1003	Starter armature
K308650	S9045	Starter
P941518P	A0185	Alternator
PO9415420	A0185	Alternator
Q941542	A0185	Alternator
V941501	S9044	Starter
X 830100007	S9044	Starter

CATERPILLAR	AS	PRODUCT
109-2361	S0170	Starter
1P2508	SD1003	Drive
1P9181	SS1004	Starter solenoid
258207	ARC1007	Rectifier
321507	SS1002	Starter solenoid
328925	ARD9059	Diode
329679	SD1004	Drive
358225	ARC1001	Rectifier
3E5381	S6025	Starter
3E7285	A0018	Alternator
3E7857	SD1022	Drive
3N3748	ARC1001	Rectifier
3N3750	ARC1007	Rectifier
3N3754	ARE1001	Regulator
3T6353	ARE1002	Regulator
3T6354	ARE1002	Regulator
4M1812	SS1004	Starter solenoid
4M1839	SF1001	Starter field coil
4N4517	SD0028	Drive
4R7057	SS1004	Starter solenoid
5L8733	SA1001	Starter armature
6N1874	ARE1002	Regulator
6N1889	S1006	Starter
7L6586	SS1014	Starter solenoid
7L6587	SA1001	Starter armature
7M8651	SA1003	Starter armature
7T2798	ARE6046	Regulator
8C4774	S6025	Starter
8L5071	SS1004	Starter solenoid
9G5584	S1006	Starter
9G9817	ABE9020	Bearing
9L6776	ARC1012	Rectifier
9W3748	S6025	Starter
9X0341	A0082	Alternator
9X1275	SBH6001	S. Brush holder
PX0341	A0082	Alternator

CAV	AS	PRODUCT
1327A600	S0063	Starter
6220-307	ABE9040(NSK)	Bearing
6220-694	ABE9040(NSK)	Bearing
6270-316	ABE9006	Bearing
6360-252	ABE9038	Bearing
6360-61	ABE9038	Bearing
NC2-51	ABE9038	Bearing
S115A24-21	S0063	Starter

CGB	AS	PRODUCT
CGB-23549	S1014	Starter

CHRYSLER	AS	PRODUCT
04868429AB	A6039	Alternator
04868429AC	A6039	Alternator
04868429AD	A6039	Alternator
051383490AA	AFP0034	FW pulley
053034049AA	AFP0034	FW pulley
2098360	SS9021	Starter solenoid
2940030	ARE3021	Regulator
3000046	ARD9044	Diode
3000047	ARD9043	Diode
3202630	SS1001	Starter solenoid
3204049	SS1001	Starter solenoid
3205022	SS1001	Starter solenoid
3225629	SS9021	Starter solenoid
33002709	S5015	Starter
33004180	S0031	Starter
4557209	S0058	Starter
4557468	S0028	Starter
4793110	S0028	Starter
4793493	S0102	Starter
4793804	S0035	Starter
4868429AB	A6039	Alternator
4868429AC	A6039	Alternator
4868429AD	A6039	Alternator
5033133AA	S0102	Starter
5033133AB	S0102	Starter
5033133AC	S0102	Starter
5206607	SS0065	Starter solenoid
5206626	SS0014	Starter solenoid
5206632	SD6002	Drive
5213077	SS0065	Starter solenoid
5213310	SD6002	Drive
5213850	SD6002	Drive
5226444	S0058	Starter
5227342	S0058	Starter
5233007	S0058	Starter
5233966	SD6033	Drive
5234382	SD0067	Drive
53013554AD	AFP6008	FW pulley
53013554AE	AFP6008	FW pulley
56027317	S5015	Starter
56027350	S0031	Starter
56041012	S5015	Starter
56041012AB	S5015	Starter
56041014	S5015	Starter
56041120	A0182	Alternator
56041120AC	A0182	Alternator
56041322	A0182	Alternator
56041324	A0182	Alternator
56041324AC	A0182	Alternator
56041436AC	S5054	Starter
56041579AB	S5031	Starter
8133925	SS1006	Starter solenoid
CH4004	ARD9044	Diode
CH4005	ARD9043	Diode

CITROEN	AS	PRODUCT
5802AS	S0123	Starter
5802C3	S3027	Starter
5802E2	S3027	Starter
5802Q7	S3019	Starter
5802Z8	S3029	Starter

CITROEN	AS	PRODUCT
95656488	S3031	Starter
9610601580	A3057	Alternator
9619333280	A3057	Alternator
9626261480	S3019	Starter
9634561480	A3069	Alternator
CPC	**AS**	**PRODUCT**
ADME-011	ARD9002	Diode
ADME-0111	ARD9001	Diode
CUMMINS	**AS**	**PRODUCT**
3255439	A0001	Alternator
3282554	A0082	Alternator
3603869RX	SS1004	Starter solenoid
3603870RX	SS1014	Starter solenoid
3604230RX	SS1014	Starter solenoid
3604231RX	SS1004	Starter solenoid
3908594	S1024	Starter
3918377	S1007	Starter
3920679	A0018	Alternator
3926932	S1007	Starter
3935530	A1018	Alternator
DAEWOO	**AS**	**PRODUCT**
10455506	S1014	Starter
2.62.034	S9050	Starter
273110	ARE1011	Regulator
276010	ARE1012	Regulator
455699	S1014	Starter
589714	ARC1019	Rectifier
65.26201-7039	S6004	Starter
96190262	A1005	Alternator
96208782	S1014	Starter
96221945	A1005	Alternator
96258990	A1005	Alternator
96275481	S6016	Starter
96288095	A1005	Alternator
96289030	A9004	Alternator
96303550	A1004	Alternator
96303556	A1004	Alternator
96314258	A9004	Alternator
96380673	A9004	Alternator
96404263	A9004	Alternator
96430344	S0141	Starter
96430345	S0098	Starter
96450663	S0098	Starter
96467385	S6016	Starter
96497700	S6016	Starter
96518124	A9004	Alternator
96518887	S6016	Starter
96540541	A9013	Alternator
96550792	S1014	Starter
96566261	A9004	Alternator
96567255	A9004	Alternator
96569440	S6016	Starter
96618789	S6016	Starter
96652100	A9036	Alternator
ATPA0792	S1014	Starter
DAF	**AS**	**PRODUCT**
1201327	S0196	Starter
1274480	A0001	Alternator
1284775	S0076	Starter
1287890	S0160	Starter
1298995	A0002	Alternator
1317220	S0076	Starter

DAF	AS	PRODUCT
1318615	S0076	Starter
1337451	SF0014	Starter field coil
1340895	S0235	Starter
1346162	S0160	Starter
1350515	A0001	Alternator
1357210	S0076	Starter
1357212	S0076	Starter
1357591	A0001	Alternator
1357592	A0001	Alternator
1357593	A0002	Alternator
1368327	A0120	Alternator
1377860	A0122	Alternator
1387383	S0178	Starter
1604246	S0137	Starter
1626130	A0211	Alternator
1633811	S0184	Starter
1667205	S0137	Starter
1667425	S0194	Starter
1688625	S0194	Starter
1688720	S0137	Starter
1697023	A0122	Alternator
1697024	A0122	Alternator
1697321	A0120	Alternator
1697322	A0122	Alternator
1697628	SS0060	Starter solenoid
1735788	S0160	Starter
1739935	S0194	Starter
1739936	S0137	Starter
365211	S0023	Starter
511188	S0235	Starter
653721	S0235	Starter
696018	ABR0001	Bracket
D653721R	S0235	Starter
DAIHATSU	**AS**	**PRODUCT**
27060-87112-000	A6024	Alternator
27060-87512-000	A6024	Alternator
27060-87601-000	A6024	Alternator
27060-87602-000	A6024	Alternator
27060-87604-000	A6021	Alternator
27060-87608-000	A6021	Alternator
27060-87714-000	A6021	Alternator
27060-87721-000	A6021	Alternator
27357-87101-000	ARC6005	Rectifier
28011-54010	SD6006	Drive
28011-87706	SD6004	Drive
28011-87706-000	SD6004	Drive
28100-72010-000	S6013	Starter
28100-72080-000	S6013	Starter
28150-12030-000	SS6002	Starter solenoid
28150-12031-000	SS6002	Starter solenoid
28150-15011-000	SS6003	Starter solenoid

DAIHATSU	AS	PRODUCT
28150-15012-000	SS6003	Starter solenoid
28150-22011-000	SS6001	Starter solenoid
28150-24061-000	SS6001	Starter solenoid
28150-25010-000	SS6001	Starter solenoid
28150-25032-000	SS6001	Starter solenoid
28150-31050-000	SS6002	Starter solenoid
28150-33020-000	SS6001	Starter solenoid
28150-34070-000	SS6001	Starter solenoid
28150-37010-000	SS6003	Starter solenoid
28150-41011-000	SS6001	Starter solenoid
28150-87203-000	SS6001	Starter solenoid
28150-87701-000	SS6003	Starter solenoid
28160-64040-000	SA6007	Starter armature
DAYCO	**AS**	**PRODUCT**
TA436	AFP0070	FW pulley
DELCO	**AS**	**PRODUCT**
00E091	S9001	Starter
082	A0134	Alternator
1011111	A1008	Alternator
10451570	AFP0015	FW pulley
10451619	ABE9003	Bearing
10453582	AFP0015	FW pulley
10454669	ARE1028	Regulator
10455006	S1002	Starter
10455010	S1002	Starter
10455011	S1003	Starter
10455013	S1003	Starter
10455016	S1003	Starter
10455017	S1002	Starter
10455019	S1002	Starter
10455024	S1002	Starter
10455025	S1002	Starter
10455042	S1003	Starter
10455048	S1002	Starter
10455050	S1003	Starter
10455053	S1002	Starter
10455054	S1003	Starter
10455070	S1003	Starter
10455503	S6016	Starter
10456401	ARC1005	Rectifier
10456422	SD1002	Drive
10456454	SS9012	Starter solenoid
10456457	RX457-458	Sta. Brush set
10456458	RX457-458	Sta. Brush set
10456461	ABE9021	Bearing
10456462	ABE9001	Bearing
10456466	SA1009	Starter armature
10457061	SS1023	Starter solenoid
10457117	SA1010	Starter armature
10457121	SD1018	Drive
10457151	SS1023	Starter solenoid
10457236	ARC1005	Rectifier
10457362	SD1023	Drive

DELCO	AS	PRODUCT
10457366	SS1019	Starter solenoid
10457367	SS1019	Starter solenoid
10457368	SS1022	Starter solenoid
10457601	SS1023	Starter solenoid
10457622	SA1010	Starter armature
10457690	ARC1005	Rectifier
10458199	ARE1027	Regulator
10458200	ARE1027	Regulator
10458201	ARE1027	Regulator
10459216	A1017	Alternator
10459295	A1017	Alternator
10459360	A1017	Alternator
10461005	S1022	Starter
10461006	S1021	Starter
10461011	S1021	Starter
10461024	S1001	Starter
10461028	S1016	Starter
10461030	S1001	Starter
10461043	S1001	Starter
10461044	S1022	Starter
10461047	S1001	Starter
10461054	S1001	Starter
10461055	S1016	Starter
10461068	S1001	Starter
10461081	S1020	Starter
10461431	A1014	Alternator
10461444	S1019	Starter
10461470	S1015	Starter
10462312	S1002	Starter
10463013	A1007	Alternator
10463014	A1007	Alternator
10463016	A1007	Alternator
10463017	A1007	Alternator
10463172	A1008	Alternator
10463651	A1006	Alternator
10463940	A1006	Alternator
10465013	S1005	Starter
10465018	S1002	Starter
10465053	S1005	Starter
10465054	S1005	Starter
10465065	S1003	Starter
10465096	S1002	Starter
10465098	S1002	Starter
10465168	S1005	Starter
10465293	SD1009	Drive
10465490	S1002	Starter
10467052	ARC1017	Rectifier
10467421	SS1007	Starter solenoid
10467985	SS1008	Starter solenoid
10468311	ARE1027	Regulator
10468675	SD1007	Drive
10468962	SS1007	Starter solenoid
10469039	SS1007	Starter solenoid
10469092	ABE9004	Bearing
10469173	SD1006	Drive
10469265	ARC1015	Rectifier
10470609	ARC1017	Rectifier
10470730	ARC1005	Rectifier
10470757	SD1002	Drive
10471170	ARC1016	Rectifier
10471539	SD1014	Drive
10472559	SA1013	Starter armature
10472565	SD1022	Drive
10472597	ARC1005	Rectifier
10472881	ABH1003	A. Brush holder
10473364	ABH1003	A. Brush holder
10473403	ABE9004	Bearing
10473700	SD1007	Drive
10474290	ABH1003	A. Brush holder
10475011	ABH1004	A. Brush holder
10475017	APC1001	Plastic cover
10475019	ARE1005	Regulator
10475022	AR1002	Rotor
10475023	ABE9003	Bearing
10475030	AS1001	Stator
10475034	ARC1002	Rectifier
10475039	ARC1019	Rectifier
10475107	SBH1005	S. Brush holder
10475450	AS1001	Stator
10475523	AR1002	Rotor
10475588	SA1014	Starter armature
10475597	SA1014	Starter armature
10475602	SBH1004	S. Brush holder
10475616	SD1009	Drive
10475646	SS1010	Starter solenoid
10475654	SS1010	Starter solenoid
10475742	AS1001	Stator
10475746	ABH1005	A. Brush holder
10475748	AR1001	Rotor
10475751	ASL9012	Slip ring
10475757	ARC1006	Rectifier
10475758	ARC1006	Rectifier
1047578	ARC1006	Rectifier
10475974	SD1011	Drive
10476006	SBH1003	S. Brush holder
10476239	ABE9006	Bearing
10476400	AS1001	Stator
10476528	SD1017	Drive
10476603	SD0078	Drive
10476642	SD1010	Drive
10477566	SD1007	Drive
10478806	S1020	Starter
10478864	S1006	Starter
10478912	S1009	Starter
10478943	S1001	Starter
10478946	S1001	Starter
10478980	S1001	Starter
10478986	S1001	Starter
10478998	S1001	Starter
10479082	S1016	Starter
10479108	S1024	Starter
10479111	S1001	Starter
10479225	A1011	Alternator
10479252	S1001	Starter
10479384	A1001	Alternator
10479622	S1007	Starter
10479623	S1007	Starter
10479626	S1015	Starter
10479627	S0002	Starter
10479650	S1015	Starter
10479814	A1007	Alternator
10479902	A1007	Alternator
10479906	A1008	Alternator
10479909	A1007	Alternator
10479910	A1007	Alternator
10479911	A1007	Alternator
10479912	A1008	Alternator
10479913	A1007	Alternator
10479914	A1010	Alternator
10479923	ARE1005	Regulator
10479947	ARE1005	Regulator
10479955	ARE1005	Regulator
10479990	A1003	Alternator
10479993	A1008	Alternator
10479998	A1007	Alternator
10479999	A1003	Alternator
10480000	A1002	Alternator
10480028	A1008	Alternator
10480036	A1007	Alternator
10480055	A1008	Alternator
10480068	A1007	Alternator
10480073	A1002	Alternator
10480082	A1008	Alternator
10480086	A1008	Alternator
10480087	A1008	Alternator
10480097	A1008	Alternator
10480099	A1008	Alternator
10480104	A1008	Alternator
10480105	A1007	Alternator
10480114	A1007	Alternator
10480134	A1007	Alternator
10480167	A1006	Alternator
10480168	A1006	Alternator
10480198	A1006	Alternator
10480214	A1014	Alternator
10480215	A1014	Alternator
10480222	A1001	Alternator
10480225	A1011	Alternator
10480226	A1010	Alternator
10480251	A1006	Alternator
10480273	A1009	Alternator
10480308	A1006	Alternator
10480462	A1014	Alternator
10482835	IM1001	Ignition Module
10483643	ARE1027	Regulator
10484034	SB1005	Sta. Brush set
10484662	SS1018	Starter solenoid
10484670	AFP1002	FW pulley
10486311	ARE1027	Regulator
10489033	AR1001	Rotor
10490000	A1002	Alternator
10490073	A1002	Alternator
10490180	ABH1003	A. Brush holder
10491097	ARC1006	Rectifier
10492409	SD1013	Drive
10492837	ARC1006	Rectifier
10492838	ARC1006	Rectifier
10493240	ARE1006	Regulator
10493596	ARC1003	Rectifier
10494503	ARC1004	Rectifier
10494747	ARE1027	Regulator
10495414	ABE9003	Bearing
10496048	IM1002	Ignition Module
10496541	IM1002	Ignition Module
10496784	IM1002	Ignition Module
10497257	SD1008	Drive

DELCO	AS	PRODUCT
10497275	SS1007	Starter solenoid
10498407	SD1014	Drive
10498438	SD1004	Drive
10498527	SD1006	Drive
10498530	SA1011	Starter armature
10498586	SA1011	Starter armature
10498717	ABE9020	Bearing
10499850	SD1024	Drive
10511026	AFP2002	FW pulley
10511758	SA1012	Starter armature
10514476	ARE1024	Regulator
10521828	ARE1024	Regulator
1101091	A1007	Alternator
1101109	A1007	Alternator
1101110	A1008	Alternator
1101111	A1008	Alternator
1101139	A1007	Alternator
1101140	A1007	Alternator
1101142	A1007	Alternator
1101143	A1007	Alternator
1101149	A1007	Alternator
1101162	A1007	Alternator
1101196	A0134	Alternator
1101231	A1007	Alternator
1101277	A1007	Alternator
1101278	A1007	Alternator
1101293	A1008	Alternator
1101346	A1007	Alternator
1101435	A1007	Alternator
1101521	A1008	Alternator
1101582	A1008	Alternator
1101583	A1007	Alternator
1101593	A1007	Alternator
1101595	A1007	Alternator
1101596	A1007	Alternator
1101599	A1008	Alternator
1101600	A1008	Alternator
1101618	A1007	Alternator
1101620	A1008	Alternator
1101629	A1008	Alternator
1101632	A1008	Alternator
1101633	A1008	Alternator
1101645	A1008	Alternator
1101646	A1008	Alternator
1101647	A1008	Alternator
1101810	A1007	Alternator
1101822	A1007	Alternator
1102600	A1007	Alternator
1102601	A1007	Alternator
110397	S0016	Starter
1105510	ARE1002	Regulator
110566	S2009	Starter
1105710	A1008	Alternator
1105711	A1008	Alternator
1105715	A1008	Alternator
1105722	A1007	Alternator
1109222	S1009	Starter
1109285	S1009	Starter
1109286	S1009	Starter
1109287	S1009	Starter
1109288	S1009	Starter
1109289	S1009	Starter
1109290	S1009	Starter
1109291	S1009	Starter
1109292	S1009	Starter
1109293	S1009	Starter
1109296	S1009	Starter
1109298	S1006	Starter
1109385	S1009	Starter
1109494	S1009	Starter
1109526	S1002	Starter
1109530	S1002	Starter
1109538	S1002	Starter
1109540	S1012	Starter
1109553	S1009	Starter
1109564	S1002	Starter
1109631	S1009	Starter
1109636	S1009	Starter
1109638	S1009	Starter
1109642	S1009	Starter
1109643	S1009	Starter
1109647	S1009	Starter
1109649	S1009	Starter
1109661	S1009	Starter
1109755	S1009	Starter
1109759	S1009	Starter
1109768	S1009	Starter
1109771	S1009	Starter
1109772	S1009	Starter
1109773	S1009	Starter
1109774	S1009	Starter
1109775	S1009	Starter
1109776	S1009	Starter
1109777	S1009	Starter
1109778	S1009	Starter
1109780	S1009	Starter
1109782	S1009	Starter
1109787	S1009	Starter
1109788	S1009	Starter
1109789	S1009	Starter
1109791	S1009	Starter
1109798	S1009	Starter
1109831	S1006	Starter
1109838	S1009	Starter
1109839	S1009	Starter
1109840	S1009	Starter
1109841	S1009	Starter
1109842	S1009	Starter
1109845	S1009	Starter
1109846	S1009	Starter
1109960	S1009	Starter
1109961	S1009	Starter
1109965	S1009	Starter
1109972	S1009	Starter
1109973	S1009	Starter
1109977	S1009	Starter
1109978	S1009	Starter
1109979	S1009	Starter
1109986	S1009	Starter
1109987	S1009	Starter
111089	S5012	Starter
1113266	S1005	Starter
1113267	S1005	Starter
1113269	S1005	Starter
1113270	S1005	Starter
1113271	S0117	Starter
1113272	S1019	Starter
1113277	S1007	Starter
1113286	S0115	Starter
1113288	S1012	Starter
1113291	S1007	Starter
1113295	S1005	Starter
1113296	S1005	Starter
1113594	S1007	Starter
1113811	S1006	Starter
1113817	S1006	Starter
1113827	S1006	Starter
1113840	S1006	Starter
1113853	S1006	Starter
1113901	S1006	Starter
1113904	S1006	Starter
1113905	S1001	Starter
1113919	S1006	Starter
1113923	S1006	Starter
1113925	S1006	Starter
1113928	S1006	Starter
1113930	S1006	Starter
1113934	S1006	Starter
1113942	S1006	Starter
1113943	S1006	Starter
1113949	S1006	Starter
1113950	S1006	Starter
1113951	S1006	Starter
1113959	S1006	Starter
1113960	S1006	Starter
1113962	S1006	Starter
1113967	S1006	Starter
1113969	S1006	Starter
1113982	S1006	Starter
1113990	S1006	Starter
1113991	S1006	Starter
1113992	S1006	Starter
1113993	S1006	Starter
1113998	S1006	Starter
1114250	SS1001	Starter solenoid
1114251	SS1001	Starter solenoid
1114252	SS1001	Starter solenoid
1114253	SS1001	Starter solenoid
1114255	SS1001	Starter solenoid
1114256	SS1001	Starter solenoid
1114257	SS1001	Starter solenoid
1114263	SS1001	Starter solenoid
1114264	SS1001	Starter solenoid
1114266	SS1001	Starter solenoid
1114268	SS1001	Starter solenoid
1114270	SS1001	Starter solenoid
1114271	SS1001	Starter solenoid
1114272	SS1001	Starter solenoid
1114273	SS1001	Starter solenoid
1114277	SS1001	Starter solenoid
1114278	SS1001	Starter solenoid
1114279	SS1001	Starter solenoid
1114281	SS1001	Starter solenoid
1114283	SS1001	Starter solenoid
1114287	SS1001	Starter solenoid
1114289	SS1001	Starter solenoid

DELCO	AS	PRODUCT
1114290	SS1001	Starter solenoid
1114291	SS1001	Starter solenoid
1114292A	SS1001	Starter solenoid
1114294	SS1001	Starter solenoid
1114295	SS1001	Starter solenoid
1114297	SS1001	Starter solenoid
1114299	SS1001	Starter solenoid
1114304	SS1001	Starter solenoid
1114306	SS1001	Starter solenoid
1114322	SS1001	Starter solenoid
1114324	SS1001	Starter solenoid
1114325	SS1001	Starter solenoid
1114328	SS1001	Starter solenoid
1114330	SS1001	Starter solenoid
1114333	SS1001	Starter solenoid
1114334	SS1001	Starter solenoid
1114335	SS1001	Starter solenoid
1114336	SS1001	Starter solenoid
1114337	SS1001	Starter solenoid
1114339	SS1001	Starter solenoid
1114340	SS1001	Starter solenoid
1114341	SS1001	Starter solenoid
1114344	SS1001	Starter solenoid
1114346	SS1001	Starter solenoid
1114347	SS1001	Starter solenoid
1114348	SS1001	Starter solenoid
1114349	SS1001	Starter solenoid
1114350	SS1001	Starter solenoid
1114351	SS1001	Starter solenoid
1114353	SS1001	Starter solenoid
1114354	SS1001	Starter solenoid
1114356	SS1001	Starter solenoid
1114359	SS1001	Starter solenoid
1114362	SS1001	Starter solenoid
1114364	SS1001	Starter solenoid
1114365	SS1002	Starter solenoid
1114367	SS1001	Starter solenoid
1114378	SS1001	Starter solenoid
1114379	SS1001	Starter solenoid
1114380	SS1001	Starter solenoid
1114381	SS1001	Starter solenoid
1114388	SS1001	Starter solenoid
1114391	SS1001	Starter solenoid
1114395	SS1001	Starter solenoid
1114396	SS1001	Starter solenoid
1114398	SS1001	Starter solenoid
1114399	SS1001	Starter solenoid
1114430	SS1001	Starter solenoid
1114458	SS1001	Starter solenoid
1114460	SS1001	Starter solenoid
1114466	SS1001	Starter solenoid
1114468	SS1001	Starter solenoid
1114474	SS1001	Starter solenoid
1114487	SS1001	Starter solenoid
1114488	SS1001	Starter solenoid
1114493	SS1001	Starter solenoid
1114494	SS1001	Starter solenoid
1114495	SS1001	Starter solenoid
1114496	SS1001	Starter solenoid
1114499	SS1001	Starter solenoid
1114500	SS1001	Starter solenoid
1114502	SS1001	Starter solenoid
1114504	SS1001	Starter solenoid
1114508	SS1001	Starter solenoid
1114510	SS1001	Starter solenoid
1114514	SS1006	Starter solenoid
1114515	SS1006	Starter solenoid
1114517	SS1006	Starter solenoid
1114518	SS1006	Starter solenoid
1114524	SS1006	Starter solenoid
1114526	SS1006	Starter solenoid
1114529	SS1006	Starter solenoid
1114530	SS1006	Starter solenoid
1114531	SS1006	Starter solenoid
1114556	SS1001	Starter solenoid
1114557	SS1006	Starter solenoid
1114562	SS1006	Starter solenoid
1114564	SS1006	Starter solenoid
1114565	SS1001	Starter solenoid
1114566	SS1006	Starter solenoid
1114569	SS1006	Starter solenoid
1114571	SS1006	Starter solenoid
1114578	SS1007	Starter solenoid
1114580	SS1008	Starter solenoid
1114581	SS1008	Starter solenoid
1114582	SS1007	Starter solenoid
1114583	SS1009	Starter solenoid
1114587	SS1010	Starter solenoid
1114706	S1006	Starter
1114711	S1006	Starter
1114712	S1006	Starter
1114729	S1006	Starter
1114742	S1006	Starter
1114767	S1006	Starter
1114777	S1006	Starter
1114843	S1006	Starter
1114845	S1006	Starter
1114856	S1006	Starter
1114872	S1006	Starter
1114905	S1006	Starter
1114917	S1006	Starter
1114980	S1006	Starter
1114989	S1006	Starter
111534	S2005	Starter
1115501	SS1002	Starter solenoid
1115508	SS1002	Starter solenoid
1115510	SS1002	Starter solenoid
1115526	SS1004	Starter solenoid
1115529	SS1002	Starter solenoid
1115531	SS1002	Starter solenoid
1115540	SS1002	Starter solenoid
1115544	SS1004	Starter solenoid
1115547	SS1004	Starter solenoid
1115548	SS1004	Starter solenoid
1115556	SS1014	Starter solenoid
1115557	SS1004	Starter solenoid
1115559	SS1004	Starter solenoid
1115565	SS1014	Starter solenoid
1115575	SS1014	Starter solenoid
1115576	SS1004	Starter solenoid
1115582	SS1002	Starter solenoid
1115593	SS1005	Starter solenoid
1115594	SS1015	Starter solenoid
1115595	SS1003	Starter solenoid
1115601	SS1003	Starter solenoid
1115604	SS1015	Starter solenoid
1115607	SS1004	Starter solenoid
1115608	SS1003	Starter solenoid
1115609	SS1013	Starter solenoid
1115622	SS1020	Starter solenoid
1115627	SS1020	Starter solenoid
1115634	SS1024	Starter solenoid
1115645	SS1005	Starter solenoid
1115664	SS1005	Starter solenoid
1116380	ARE1001	Regulator
1116384	ARE1001	Regulator
1116385	ARE1001	Regulator
1116387	ARE1001	Regulator
1116387H	ARE1001	Regulator
1116388	ARE1002	Regulator
1116392	ARE1001	Regulator
1116404	ARE1002	Regulator
1116408	ARE1007	Regulator
1116411	ARE1003	Regulator
1116412	ARE1013	Regulator
1116413	ARE1014	Regulator
1116423	ARE1001	Regulator
1116424	ARE1008	Regulator
1116425	ARE1016	Regulator
1116428	ARE1007	Regulator
1116429	ARE1003	Regulator
1116430	ARE1014	Regulator
1116432	ARE1017	Regulator
1116434	ARE1013	Regulator
1116436	ARE1003	Regulator
1116437	ARE1003	Regulator
1116445	ARE1014	Regulator
1117891	A1017	Alternator
1117900	A1018	Alternator
1117906	A1017	Alternator
1117909	A1017	Alternator
1117910	A1017	Alternator
1117911	A1017	Alternator
1117913	A1017	Alternator
1117914	A1017	Alternator
1117918	A1017	Alternator
1117923	A1017	Alternator
1117929	A1017	Alternator
1117932	A1017	Alternator
1117941	A1017	Alternator
1117943	A1017	Alternator
1117947	A1017	Alternator
1117949	A1017	Alternator
1117951	A1017	Alternator
1117957	A1017	Alternator
1117958	A1017	Alternator
1117959	A1017	Alternator
1117963	A1017	Alternator
1117966	A1017	Alternator
1119778	SS1002	Starter solenoid
1119781	SS1001	Starter solenoid
1119798	SS1001	Starter solenoid
1119832	SS1004	Starter solenoid
1119833	SS1002	Starter solenoid
1119835	SS1014	Starter solenoid
1119848	SS1004	Starter solenoid

DELCO	AS	PRODUCT
1119853	SS1014	Starter solenoid
1119877	SS1002	Starter solenoid
1119879	SS1014	Starter solenoid
1119882	SS1002	Starter solenoid
1119885	SS1002	Starter solenoid
1119890	SS1002	Starter solenoid
1119910	SS1001	Starter solenoid
1119919	SS1001	Starter solenoid
1119923	SS1001	Starter solenoid
1119933	SS1002	Starter solenoid
1119935	SS1002	Starter solenoid
1119936	SS1001	Starter solenoid
1119946	SS1001	Starter solenoid
1119981	SS1001	Starter solenoid
1119986	SS1001	Starter solenoid
1119998	SS1001	Starter solenoid
1119999	SS1001	Starter solenoid
112161	S9001	Starter
112816	S5012	Starter
1203165	SD1001	Drive
1204270	ARE1005	Regulator
13010892	IM1001	Ignition Module
13089649	ARE1007	Regulator
13120469	ARE1003	Regulator
150	S1013	Starter
15163024	ARE1028	Regulator
15163025	ARE1028	Regulator
16010892	IM1001	Ignition Module
16140049	IM1001	Ignition Module
16140079	IM1001	Ignition Module
16148399	ARE1017	Regulator
168	S1013	Starter
172	S1013	Starter
17610-Q1010	S2005	Starter
177	S1013	Starter
1828393	SD1002	Drive
1846926	SF1001	Starter field coil
1851430	SD1004	Drive
1852209	ARC1007	Rectifier
1852249	SA1005	Starter armature
1852530	SA1001	Starter armature
1852828	ARD9060	Diode
1852882	RX122H	Sta. Brush set
1852883	RX122H	Sta. Brush set
1852884	RX122	Sta. Brush set
1852887	RX124	Sta. Brush set
1852888	RX124H	Sta. Brush set
1852892	RX134	Sta. Brush set
1852894	RX134H	Sta. Brush set
1852898	SB1001	Sta. Brush set
1852928	ARD9054	Diode
1852929	ARD9053	Diode
1875627	ARC1007	Rectifier
1875645	ARC1012	Rectifier
1875687	SD1002	Drive
1875802	SD1004	Drive
1875852	SD1004	Drive
1877347	SD1024	Drive
1877353	SD1004	Drive
1877354	SD1004	Drive
1887989	SA1006	Starter armature
1891055	ARC1007	Rectifier
1892914	ARC1012	Rectifier
1893306	ABE9004	Bearing
1893560	SD1005	Drive
1893561	SD1016	Drive
1894211	SD1003	Drive
1894212	SD1015	Drive
1894213	SD1005	Drive
1894218	SD1016	Drive
1894460	ARE1002	Regulator
19009701	ARE1005	Regulator
19009702	ARE1004	Regulator
19009703	ARE1019	Regulator
19009708	ARE1006	Regulator
19009712	ARE1013	Regulator
19009716	ARE1005	Regulator
19009730	ARE1014	Regulator
19009752	ARE1003	Regulator
19009769	ARE1003	Regulator
19010111	A1018	Alternator
19010113	A1017	Alternator
19010115	A1017	Alternator
19010116	A1017	Alternator
19010120	A1017	Alternator
19010124	A1017	Alternator
19010129	A1017	Alternator
19010134	A1017	Alternator
19010137	A1017	Alternator
19010145	A1017	Alternator
19010153	A1017	Alternator
19010155	A1017	Alternator
19010161	A1017	Alternator
19010162	A1017	Alternator
19010170	A1017	Alternator
19010171	A1017	Alternator
19010172	A1017	Alternator
19010173	A1017	Alternator
19010182	A1018	Alternator
19010185	A1018	Alternator
19010187	A1017	Alternator
19010188	A1017	Alternator
19010191	A1017	Alternator
19010193	A1018	Alternator
19010195	A1018	Alternator
19010207	A1017	Alternator
19010212	A1017	Alternator
19011501	S1017	Starter
19011504	S1018	Starter
19011514	S1018	Starter
19011516	S1011	Starter
19020309	A1017	Alternator
19020356	A1017	Alternator
19020361	A1017	Alternator
19020382	A1018	Alternator
19020391	A1018	Alternator
19024010	S0001	Starter
19024016	S0216	Starter
19024034	S0222(BOSCH)R	Starter
19024040	S0117	Starter
19024049	S0023	Starter
19024051	S0003	Starter
19024063	S0009	Starter
19024065	S0245	Starter
19024076	S0065	Starter
19024077	S0065	Starter
19024080	S0022	Starter
19024109	S0001	Starter
19024164	S9065	Starter
19024202	S0110	Starter
19024204	S0002	Starter
19024205	S0067	Starter
19024224	S0115	Starter
19024225	S0002	Starter
19024226	S0068	Starter
19024230	S0116	Starter
19024231	S0118	Starter
19024234	S0068	Starter
19024238	S0114	Starter
19024250	S0113	Starter
19024252	S0115	Starter
19024255	S0112	Starter
19024257	S9046	Starter
19024258	S0002	Starter
19024260	S0170	Starter
19024262	S0196	Starter
19024263	S0110	Starter
19024264	S0041	Starter
19024272	S0116	Starter
19024273	S0118	Starter
19024288	S0107	Starter
19024303	SD0006	Drive
19024304	SD0006	Drive
19024305	SD0005	Drive
19024306	SD0006	Drive
19024307	SD0015	Drive
19024309	SD0005	Drive
19024313	SD0113	Drive
19024316	SA0010	Starter armature
19024317	SA0009	Starter armature
19024318	SA0001	Starter armature
19024319	SA0048	Starter armature
19024320	SS0002	Starter solenoid
19024324	SS0001	Starter solenoid
19024347	SBR0005	Starter bracket
19024348	SBR0003	Starter bracket
19024349	SBR0004	Starter bracket
19024350	SBR0005	Starter bracket
19024351	SBR0005	Starter bracket
19024352	SBR0005	Starter bracket
19024371	SBR0006	Starter bracket
19024373	SBR0003	Starter bracket
19024385	SRS0003	Repair set
19024387	BSX148	Sta. Brush set
19024388	SF0003	Starter field coil
19024389	SF0005	Starter field coil
19024460	SA0012	Starter armature
19024461	SA0013	Starter armature
19024462	SA0015	Starter armature
19024463	SA0014	Starter armature
19024464	SA0016	Starter armature
19024465	SA0017	Starter armature
19024468	SA0015	Starter armature
19024470	SF0002	Starter field coil
19024471	SF0001	Starter field coil
19024472	SF0004	Starter field coil

DELCO	AS	PRODUCT
19024476	SF0006	Starter field coil
19024479	SBR0002	Starter bracket
19024494	SBR0002	Starter bracket
19024507	SBU9004	Bushing
19024508	SBU9003	Bushing
19024510	SBU9011	Bushing
19024511	SBU9010	Bushing
19024513	SBH0002	S. Brush holder
19024514	SBH0003	S. Brush holder
19024515	SBH0001	S. Brush holder
19024517	SD0046	Drive
19024518	SD0019	Drive
19024520	SD0012	Drive
19024521	SD0009	Drive
19024522	SD0004	Drive
19024523	SD0010	Drive
19024524	SD0011	Drive
19024525	SD0020	Drive
19024526	SD0004	Drive
19024527	SD0054	Drive
19024529	BSX96	Sta. Brush set
19024530	BSX100	Sta. Brush set
19024535	BSX134-144	Sta. Brush set
19024536	BSX135-145	Sta. Brush set
19024542	SS4003	Starter solenoid
19024543	SS4004	Starter solenoid
19024547	SS0024	Starter solenoid
19024631	BSX34	Sta. Brush set
19024643	SD0050	Drive
19024644	BSX172-173	Sta. Brush set
19024758	SS9003	Starter solenoid
19024759	SS9004	Starter solenoid
19024760	SS9006	Starter solenoid
19024761	SS9005	Starter solenoid
19024805	S9066	Starter
19024813	S0068	Starter
19024824	S0115	Starter
19024947	SA9006	Starter armature
19024986	SA9007	Starter armature
19024996	SS9017	Starter solenoid
19025100	A0002	Alternator
19025156	ARE0005	Regulator
19025157	ARE0002	Regulator
19025159	ARE0003	Regulator
19025160	ARE0022	Regulator
19025192	AS0002	Stator
19025200	AS0004	Stator
19025202	AS0006	Stator
19025225	ARC4009	Rectifier
19025226	ARC0014	Rectifier
19025227	ARC0010	Rectifier
19025228	ARC0006	Rectifier
19025230	ARC0010	Rectifier
19025244	ABR4028	Bracket
19025245	ABR4030	Bracket
19025330	A0021	Alternator
19025333	A0022	Alternator
19025378	ARE0022	Regulator
19025397	AR0002	Rotor
19025398	AS0001	Stator
19025504	ABR0004	Bracket
19025512	AS0005	Stator
19025513	AS0005	Stator
19025521	ABR0003	Bracket
19025547	AS0005	Stator
19025649	SD0027	Drive
19025713	SD0021	Drive
19025715	SD0012	Drive
19051739	ARE1028	Regulator
19053013	ARE1027	Regulator
19053730	ARE1027	Regulator
19054622	ARE1027	Regulator
19060319	ARE1027	Regulator
1906921	RX58	Alt. Brush set
1906986	RX70 8	Sta. Brush set
19070033	S0071	Starter
19070039	S1015	Starter
19070161	SD0037	Drive
19070165	SD0079	Drive
19070167	SD0027	Drive
19070179	SD0079	Drive
19070183	SA0045	Starter armature
19070191	SS0030	Starter solenoid
19070240	ARE0005	Regulator
1914341	SD0028	Drive
1918079	SD0029	Drive
1918866	SD0028	Drive
1921998	SD0028	Drive
1928998	SD0028	Drive
1932031	SD0029	Drive
1932308	SD1004	Drive
1932526	SD0028	Drive
1932545	SD0028	Drive
1932605	SD0028	Drive
1932890	SD1004	Drive
1934488	SD1004	Drive
1935487	SD1003	Drive
1935827	SD1002	Drive
1935829	SD1002	Drive
1936647	SD1005	Drive
1940134	SD1004	Drive
1940138	SD1004	Drive
1945109	SF1001	Starter field coil
1945487	SD1003	Drive
1945496	SF1001	Starter field coil
1945500	SA1002	Starter armature
1945840	SA1003	Starter armature
1945842	SD1002	Drive
1945879	SD1015	Drive
1945906	SA1001	Starter armature
1946229	SD1002	Drive
1946407	RX70 8	Sta. Brush set
1946473	RX70 8	Sta. Brush set
1946483	RX70 8	Sta. Brush set
1946945	SD1005	Drive
1946957	SD1005	Drive
1948506	SA1002	Starter armature
1948508	SA1002	Starter armature
1948606	SD1005	Drive
1949109	SF1001	Starter field coil
1951180	SD1004	Drive
1951254	SA1004	Starter armature
1952083	SD1003	Drive
1952530	SA1001	Starter armature
1953151	SD1016	Drive
1953233	SA1003	Starter armature
1954842	SD1002	Drive
1954843	SD1002	Drive
1955777	SD1003	Drive
1957846	SD1005	Drive
1959829	ARD9053	Diode
1959830	ARD9054	Diode
1959831	ARD9059	Diode
1960370	SD1003	Drive
1961320	SA1001	Starter armature
1964187	ARD9004	Diode
1965358	SD1004	Drive
1965514	SD1005	Drive
1965538	SD1002	Drive
1965723	SD1002	Drive
1965923	SD1002	Drive
1967779	SD1003	Drive
1970527	SD1015	Drive
1970711	SD1005	Drive
1971277	SD1016	Drive
1971521	RX103	Sta. Brush set
1971671	ARD9060	Diode
1971672	ARD9059	Diode
1971839	SF1001	Starter field coil
1971987	ARC1007	Rectifier
1974778	SF1001	Starter field coil
1974861	ABE9004	Bearing
1974929	SF1001	Starter field coil
1975645	ARC1012	Rectifier
1976884	SD1003	Drive
1977004	SD1015	Drive
1977005	SD1005	Drive
1977958	IM1001	Ignition Module
1978571	IM1001	Ignition Module
1979107	IM1001	Ignition Module
1979387	SBH1002	S. Brush holder
1979494	SBH1002	S. Brush holder
1984032	ARC1001	Rectifier
1984249	SA1005	Starter armature
1984287	ARE1002	Regulator
1984454	ARC1010	Rectifier
1984511	SD1014	Drive
1984638	ARC1007	Rectifier
1985129	SD0029	Drive
1985249	SA1005	Starter armature
1985262	SD1020	Drive
1987175	SA1005	Starter armature
1987211	SD1020	Drive
1987465	IM1002	Ignition Module
1987466	IM1002	Ignition Module
1987518	ARE1002	Regulator
1987989	SA1006	Starter armature
1988121	SBH1001	S. Brush holder
1988122	SBH1001	S. Brush holder
1988322	SA1007	Starter armature
1988435	SA1008	Starter armature
1988439	SBH1001	S. Brush holder
1988442	SF1002	Starter field coil
1988797	SF1002	Starter field coil
1988976	ARC1014	Rectifier
1989646	ABE9019	Bearing

DELCO	AS	PRODUCT
1989651	ABH1003	A. Brush holder
1989658	ARC1005	Rectifier
1989747	IM1002	Ignition Module
1989774	ARC1016	Rectifier
1990204	S1006	Starter
1990229	S1009	Starter
1990231	S1009	Starter
1990235	S1009	Starter
1990237	S1009	Starter
1990239	S1009	Starter
1990248	S1009	Starter
1990249	S1009	Starter
1990250	S1009	Starter
1990251	S1009	Starter
1990259	S1009	Starter
1990260	S1009	Starter
1990262	S1009	Starter
1990263	S1009	Starter
1990264	S1009	Starter
1990266	S1009	Starter
1990268	S1009	Starter
1990269	S1009	Starter
1990270	S1009	Starter
1990271	S1009	Starter
1990272	S1009	Starter
1990273	S1009	Starter
1990274	S1009	Starter
1990276	S1009	Starter
1990283	S1006	Starter
1990297	S1006	Starter
1990308	S1022	Starter
1990324	S1006	Starter
1990343	S1006	Starter
1990344	S1001	Starter
1990347	S1021	Starter
1990361	S1001	Starter
1990368	S1001	Starter
1990378	S1001	Starter
1990382	S1001	Starter
1990383	S1001	Starter
1990384	S1001	Starter
1990388	S1001	Starter
1990390	S1001	Starter
1990391	S1016	Starter
1990393	S1016	Starter
1990409	S1001	Starter
1990410	S1001	Starter
1990411	S1001	Starter
1990412	S1001	Starter
1990416	S1001	Starter
1990418	S1001	Starter
1990422	S1001	Starter
1990426	S1016	Starter
1990428	S1016	Starter
1990437	S1001	Starter
1990456	S1001	Starter
1990460	S1001	Starter
1990484	S1016	Starter
1990485	S1001	Starter
1990491	S1001	Starter
1990493	S1001	Starter
1990499	S1023	Starter
1990838	S1001	Starter
1993701	S1023	Starter
1993704	S1006	Starter
1993738	S1022	Starter
1993741	S1023	Starter
1993759	S1022	Starter
1993767	S1021	Starter
1993789	S1022	Starter
1993802	S1001	Starter
1993805	S1001	Starter
1993810	S1001	Starter
1993836	S1016	Starter
1993842	S1001	Starter
1993850	S1022	Starter
1993854	S1021	Starter
1993855	S1022	Starter
1993903	S1024	Starter
1993954	S1024	Starter
1993963	S1020	Starter
1993982	S1006	Starter
1993986	S1023	Starter
1998292	S1012	Starter
1998389	S1012	Starter
1998427	S1003	Starter
1998514	S1002	Starter
1998519	S1019	Starter
1998524	S1003	Starter
1998526	S1002	Starter
1998533	S1002	Starter
1998544	S1002	Starter
199903	S1001	Starter
2038564	SD0029	Drive
214	A1014	Alternator
215	A1014	Alternator
219091	A1003	Alternator
219101	A5036	Alternator
219138	A1005	Alternator
219139	A1004	Alternator
219170	A9004	Alternator
219187	A1013	Alternator
219202	A1005	Alternator
219235	A9004	Alternator
219251	A9004	Alternator
219292	A9004	Alternator
220198	ARE1026	Regulator
225	A1011	Alternator
262100	ARC1020	Rectifier
266600	ARC9017	Rectifier
267000	ARC1020	Rectifier
267800	ARC1020	Rectifier
271710	ARE1020	Regulator
271910	ARE1020	Regulator
271940	ARE1025	Regulator
273	A1009	Alternator
273310	ARE1011	Regulator
276000	ARC1020	Rectifier
323-818	S1022	Starter
323-839	S1022	Starter
323-840	S1021	Starter
323-864	S1016	Starter
323-879	S1020	Starter
3471040	SD1001	Drive
3471150	S1013	Starter
3471168	S1013	Starter
3471172	S1013	Starter
3471177	S1013	Starter
3471393	S1013	Starter
3471490	SD1001	Drive
3471553	SBU9027	Bushing
3471625	SB1002	Sta. Brush set
3471693	SS1017	Starter solenoid
3471694	SS1016	Starter solenoid
3471697	SS1011	Starter solenoid
3471698	SS1016	Starter solenoid
3471725	SS1012	Starter solenoid
3471741	SS1017	Starter solenoid
3471764	SB1003	Sta. Brush set
3471783	SB1004	Sta. Brush set
3471834	SB1004	Sta. Brush set
3471912	SD1001	Drive
3471929	SS1012	Starter solenoid
3471977	SS1011	Starter solenoid
3471979	SS1012	Starter solenoid
3471982	SS1017	Starter solenoid
3472020	ARC1003	Rectifier
3472082	A0134	Alternator
3472273	A1009	Alternator
3472312	ARC1001	Rectifier
3472316	ABH1001	A. Brush holder
3472319	RX103F	Alt. Brush set
3472406	ARE1001	Regulator
3472438	ABE9004	Bearing
3472557	ARE1010	Regulator
3472641	A0115	Alternator
3472808	AP3001	Pulley
3472813	ARC1025	Rectifier
3472820	ARC1003	Rectifier
3478687	ARC1003	Rectifier
3491027	SS1011	Starter solenoid
3491028	SS1016	Starter solenoid
3493008	ARC1022	Rectifier
3493029	ARE1009	Regulator
3493030	ARE1009	Regulator
3493050	ARE1010	Regulator
3493079	ARE1009	Regulator
3493080	ARE1009	Regulator
3493091	ABH1003	A. Brush holder
3493099	ARE1003	Regulator
3493214	A1014	Alternator
3493225	A1011	Alternator
3493273	A1009	Alternator
3493332	ABH1001	A. Brush holder
3493409	A1001	Alternator
3493417	ARC1022	Rectifier
3493455	A1010	Alternator
3493459	A1011	Alternator
3493641	A0115	Alternator
3493714	ARC1025	Rectifier
3493716	ARC1022	Rectifier
3493717	ARC1022	Rectifier
3493721	ARC1025	Rectifier
3493741	A0115	Alternator
3493791	A0115	Alternator
3493914	A1010	Alternator

DELCO	AS	PRODUCT
384	A1001	Alternator
409	A1001	Alternator
455	A1010	Alternator
459	A1011	Alternator
462	A1014	Alternator
589714	ARC1002	Rectifier
6065301	ARC1025	Rectifier
641	A0115	Alternator
741	A0115	Alternator
7846932	ARE1001	Regulator
791	A0115	Alternator
7982543	RX103	Alt. Brush set
7982589	ABH1002	A. Brush holder
7982635	ARC1001	Rectifier
7982673	ARE1001	Regulator
8000048	S9062	Starter
8000066	SD1003	Drive
8000337	S9062	Starter
8000387	S9062	Starter
800066	SD1003	Drive
800067	SD1015	Drive
800068	SD1005	Drive
800072	SD1003	Drive
800074	SD1016	Drive
801816	ARC1012	Rectifier
814	A1010	Alternator
8200138	S1015	Starter
8200519	S5049	Starter
823	A1001	Alternator
824	A1001	Alternator
830620	SD1003	Drive
830621	SD1015	Drive
830820	SD1003	Drive
83091	SS1001	Starter solenoid
851073	SD1005	Drive
852762	SD1005	Drive
852961	SD1005	Drive
9000763	S1010	Starter
9000786	S1004	Starter
9000794	S0098	Starter
9000795	S0098	Starter
9000817	S0126	Starter
9000819	S1008	Starter
9000820	S1010	Starter
9000821	S1008	Starter
9000822	S1010	Starter
9000824	S0126	Starter
9000839	S1008	Starter
9000841	S1004	Starter
9000850	S1010	Starter
9000860	S1004	Starter
9000879	S1008	Starter
9000884	S1008	Starter
9000885	S1008	Starter
9000895	S1010	Starter
9000899	S1008	Starter
9000910	S1003	Starter
900259	ABE9004	Bearing
904751	ABE9004	Bearing
904759	ABE9004	Bearing
904983	ABE9038	Bearing
905429	ABE9004	Bearing
905920	ABE9004	Bearing
907187	ABE9040(NSK)	Bearing
907338	ABE9004	Bearing
907354	ABE9004	Bearing
907503	ABE9004	Bearing
907998	ABE9004	Bearing
908019	ABE9004	Bearing
908419	ABE9004	Bearing
914	A1010	Alternator
922	A1009	Alternator
923	A1001	Alternator
9440923	ABE9045	Bearing
9440924	ABE9010	Bearing
94648534	ARE1022	Regulator
94652566	ARE1021	Regulator
954298	ABE9004	Bearing
954609	ABE9004	Bearing
954736	ABE9004	Bearing
954818	ABE9004	Bearing
96224431	A1013	Alternator
96224432	A1003	Alternator
96252547	A1002	Alternator
96252551	A1013	Alternator
96275481	SD1012	Drive
96550792	S3003	Starter
96569440	SD1012	Drive
A18410	S9058	Starter
CER3087	S9001	Starter
D-2040	SD1014	Drive
D-2048	SD1006	Drive
D-2050	SD1007	Drive
D1957	IM1001	Ignition Module
D1958	IM1001	Ignition Module
D1961	IM1001	Ignition Module
D1961B	IM1001	Ignition Module
D1962A	IM1001	Ignition Module
D1978	IM1002	Ignition Module
D1979	IM1002	Ignition Module
D1980	IM1002	Ignition Module
D1990	IM1002	Ignition Module
D1993	IM1002	Ignition Module
D2008	SD1002	Drive
D2014	SD1002	Drive
D2017	SD1004	Drive
D2020	SD1002	Drive
D2021	SD0029	Drive
D2026	SD1004	Drive
D2032	SD1014	Drive
D2043	SD1004	Drive
D2049	SD1002	Drive
D2051	SD1002	Drive
D2052	SD1014	Drive
D2057	SD1007	Drive
D2107	SD1004	Drive
D3910	ARD9059	Diode
D3915	ARC1007	Rectifier
D3924	ARC1010	Rectifier
D3929	ARC1015	Rectifier
D3931	ARC1017	Rectifier
D3983	ARC1012	Rectifier
D3987	ARC1014	Rectifier
D3990	ARC1017	Rectifier
D3991	ARC1005	Rectifier
D3992	ARC1018	Rectifier
D4151	SA1011	Starter armature
D4152	SA1011	Starter armature
D600A	ARE1014	Regulator
D666	ARE1001	Regulator
D667	ARE1001	Regulator
D668	ARE1001	Regulator
D673	ARE1022	Regulator
D675	ARE1007	Regulator
D677	ARE1003	Regulator
D678	ARE1013	Regulator
D680	ARE1001	Regulator
D681	ARE1014	Regulator
D683	ARE1016	Regulator
D684	ARE1013	Regulator
D685	ARE1003	Regulator
D698	ARE1003	Regulator
D699	ARE1007	Regulator
D789	ABH1003	A. Brush holder
D904A	SS1013	Starter solenoid
D913A	SS1006	Starter solenoid
D914	SS1001	Starter solenoid
D916A	SS1020	Starter solenoid
D921A	SS1020	Starter solenoid
D922A	SS1007	Starter solenoid
D930	SS1001	Starter solenoid
D931	SS1001	Starter solenoid
D932	SS1001	Starter solenoid
D934	SS1001	Starter solenoid
D936A	SS1007	Starter solenoid
D937A	SS1023	Starter solenoid
D942	SS1001	Starter solenoid
D943	SS1001	Starter solenoid
D948	SS1001	Starter solenoid
D952	SS1001	Starter solenoid
D954	SS1002	Starter solenoid
D956	SS1001	Starter solenoid
D958	SS1001	Starter solenoid
D959	SS1002	Starter solenoid
D960	SS1001	Starter solenoid
D965	SS1001	Starter solenoid
D966	SS1001	Starter solenoid
D967	SS1001	Starter solenoid
D969	SS1001	Starter solenoid
D970	SS1002	Starter solenoid
D971	SS1002	Starter solenoid
D974	SS1001	Starter solenoid
D975	SS1001	Starter solenoid
D978	SS1001	Starter solenoid
D980	SS1002	Starter solenoid
D981	SS1001	Starter solenoid
D982	SS1001	Starter solenoid
D984	SS1006	Starter solenoid
D985	SS1002	Starter solenoid
D987	SS1006	Starter solenoid
D991	SS1006	Starter solenoid
D992	SS1001	Starter solenoid
D994	SS1006	Starter solenoid
DE108	ARE1007	Regulator
DE111	ARE1003	Regulator
DE112	ARE1013	Regulator

DELCO	AS	PRODUCT
DE113	ARE1014	Regulator
DR2000	SD1001	Drive
DR2003	SD1001	Drive
DR3901	ARC1001	Rectifier
DR600	ARE1001	Regulator
DR606	ARE1001	Regulator
DR607	ARE1001	Regulator
DR608	ARE1001	Regulator
DR666	ARE1001	Regulator
DR667	ARE1001	Regulator
DR668	ARE1001	Regulator
DR680	ARE1001	Regulator
DR701	ABH1001	A. Brush holder
DR702	RX103F	Alt. Brush set
DR901	SS1016	Starter solenoid
DR902	SS1017	Starter solenoid
DR903	SS1011	Starter solenoid
DR904	SS1012	Starter solenoid
DRA0006	A3034	Alternator
DRA0007	A4058	Alternator
DRA0009	A3087	Alternator
DRA0011	A6037	Alternator
DRA0014	A9029	Alternator
DRA0015	A0150	Alternator
DRA0021	A3102	Alternator
DRA0023	A9011	Alternator
DRA0023N	A9011	Alternator
DRA0024	A9012	Alternator
DRA0024N	A9012	Alternator
DRA0035	A2029	Alternator
DRA0041	A3053	Alternator
DRA0044	A0082	Alternator
DRA0045	A0138	Alternator
DRA0074	A9019	Alternator
DRA0075	A9019	Alternator
DRA0077	A0044	Alternator
DRA0078	A3101	Alternator
DRA0079	A9009	Alternator
DRA0084	A6026	Alternator
DRA0087	A4068	Alternator
DRA0091	A4070	Alternator
DRA0092	A4071	Alternator
DRA0095	A5025	Alternator
DRA0098	A6026	Alternator
DRA0099	A2021	Alternator
DRA0101	A3071	Alternator
DRA0103	A3084R	Alternator
DRA0104	A0168	Alternator
DRA0105	A5023	Alternator
DRA0110	A0013	Alternator
DRA0113	A4058	Alternator
DRA0115	A5022	Alternator
DRA0119	A6011	Alternator
DRA0120	A0012	Alternator
DRA0121	A6015	Alternator
DRA0122	A6013	Alternator
DRA0123	A6034	Alternator
DRA0124	A3080	Alternator
DRA0130	A0004	Alternator
DRA0131	A5024	Alternator
DRA0133	A4072	Alternator
DRA0135	A3054	Alternator
DRA0137	A0210	Alternator
DRA0138	A3098R	Alternator
DRA0140	A4009	Alternator
DRA0146	A4082	Alternator
DRA0157	A6039	Alternator
DRA0166	A0038	Alternator
DRA0167	A3092	Alternator
DRA0178	A9020	Alternator
DRA0182	A2038	Alternator
DRA0191	A3074	Alternator
DRA0198	A3107	Alternator
DRA0216	A4084	Alternator
DRA0218	A0215	Alternator
DRA0219	A6019	Alternator
DRA0248	A4085	Alternator
DRA0310	A0184	Alternator
DRA0368	A4083	Alternator
DRA0510	A0103	Alternator
DRA0520	A0001	Alternator
DRA0560	A4012	Alternator
DRA0970	A4039	Alternator
DRA0980	A4065	Alternator
DRA1000	A3013	Alternator
DRA1002	A3013	Alternator
DRA1119	A0099	Alternator
DRA1190	A0099	Alternator
DRA1260	A0030	Alternator
DRA1262	A0030	Alternator
DRA1270	A0014	Alternator
DRA1300	A0020	Alternator
DRA1310	A0017	Alternator
DRA1320	A0102	Alternator
DRA1330	A0084	Alternator
DRA1340	A4029	Alternator
DRA1440	A3026	Alternator
DRA1480	A0098	Alternator
DRA1520	A0098	Alternator
DRA1641	A3045	Alternator
DRA2341	A4081	Alternator
DRA2341N	A4081	Alternator
DRA2361	A3046	Alternator
DRA2651	A2036	Alternator
DRA2681	A2036	Alternator
DRA2710	A0055	Alternator
DRA2720	A0058	Alternator
DRA2730	A0094	Alternator
DRA2793	A3012	Alternator
DRA2800	A0069	Alternator
DRA3038	A5006	Alternator
DRA3038N	A5006	Alternator
DRA3074	A3046	Alternator
DRA3076	A3002	Alternator
DRA3079	A3025	Alternator
DRA3083	A3004	Alternator
DRA3085	A3045	Alternator
DRA3086	A3006	Alternator
DRA3087	A3048	Alternator
DRA3090	A0109	Alternator
DRA3100	A0087	Alternator
DRA3107	A3011	Alternator
DRA3110	A0103	Alternator
DRA3129	A3008	Alternator
DRA3135	A3044	Alternator
DRA3137	A3044	Alternator
DRA3145	A5011	Alternator
DRA3153	A2028	Alternator
DRA3160	A0093	Alternator
DRA3165	A2027	Alternator
DRA3176	A5036	Alternator
DRA3185	A5027	Alternator
DRA3188	A5011	Alternator
DRA3189	A5007	Alternator
DRA3194	A5018	Alternator
DRA3195	A2031	Alternator
DRA3199	A4015	Alternator
DRA3203	A2024	Alternator
DRA3208	A2012	Alternator
DRA3208N	A2012	Alternator
DRA3216	A2014	Alternator
DRA3216N	A2014	Alternator
DRA3217	A5028	Alternator
DRA3225	A6017	Alternator
DRA3235	A3021	Alternator
DRA3236	A3015	Alternator
DRA3243	A3020	Alternator
DRA3244	A3016	Alternator
DRA3245	A3039	Alternator
DRA3246	A3014	Alternator
DRA3249	A3026	Alternator
DRA3250	A4059	Alternator
DRA3250N	A4059	Alternator
DRA3257	A3038	Alternator
DRA3265	A4008	Alternator
DRA3267	A0202	Alternator
DRA3268	A0006	Alternator
DRA3269	A0077	Alternator
DRA3274	A4013	Alternator
DRA3275	A2020	Alternator
DRA3276	A5014	Alternator
DRA3277	A4013	Alternator
DRA3279	A2009	Alternator
DRA3283	A4044	Alternator
DRA3284	A4065	Alternator
DRA3285	A3040	Alternator
DRA3296	A2005	Alternator
DRA3296N	A2005	Alternator
DRA3297	A2026	Alternator
DRA3330	A0030	Alternator
DRA3333	A2015	Alternator
DRA3334	A2013	Alternator
DRA3335	A2034	Alternator
DRA3347	A3075	Alternator
DRA3348	A6024	Alternator
DRA3349	A4051	Alternator
DRA3353	A4003	Alternator
DRA3355	A4030	Alternator
DRA3356	A3026	Alternator
DRA3369	A4001	Alternator
DRA3374	A9003	Alternator
DRA3374N	A9003	Alternator
DRA3376	A2004	Alternator
DRA3376N	A2004	Alternator
DRA3377	A5012	Alternator
DRA3393	A6021	Alternator

DELCO	AS	PRODUCT
DRA3394	A4017	Alternator
DRA3397	A4004	Alternator
DRA3398	A4060	Alternator
DRA3403	A4025	Alternator
DRA3406	A4007	Alternator
DRA3407	A4016	Alternator
DRA3408	A4018	Alternator
DRA3409	A4063	Alternator
DRA3409N	A4063	Alternator
DRA3415	A4069	Alternator
DRA3416	A4007	Alternator
DRA3418	A4018	Alternator
DRA3423	A3019	Alternator
DRA3424	A4053	Alternator
DRA3427	A4014	Alternator
DRA3428	A4019	Alternator
DRA3429	A4041	Alternator
DRA3433	A4033	Alternator
DRA3436	A5026	Alternator
DRA3439	A9005	Alternator
DRA3439N	A9005	Alternator
DRA3449	A6020	Alternator
DRA3453	A6022R	Alternator
DRA3455	A4024	Alternator
DRA3468	A5030R	Alternator
DRA3469	A5001	Alternator
DRA3474	A5008	Alternator
DRA3479	A1001	Alternator
DRA3479N	A1001	Alternator
DRA3483	A2025	Alternator
DRA3494	A9015	Alternator
DRA3503	A6012	Alternator
DRA3508	A6009	Alternator
DRA3515	A6032	Alternator
DRA3527	A3059	Alternator
DRA3536	A4005	Alternator
DRA3538	A3031	Alternator
DRA3540	A0030	Alternator
DRA3545	A2001	Alternator
DRA3545N	A2001	Alternator
DRA3550	A0021	Alternator
DRA3553	A4010	Alternator
DRA3583	A4020	Alternator
DRA3584	A4022	Alternator
DRA3585	A4078	Alternator
DRA3586	A9002	Alternator
DRA3587	A4055	Alternator
DRA3588	A4012	Alternator
DRA3589	A1002	Alternator
DRA3593	A1003	Alternator
DRA3623	A3042	Alternator
DRA3624	A3024	Alternator
DRA3627	A4052	Alternator
DRA3629	A4025	Alternator
DRA3638	A1004	Alternator
DRA3638N	A1004	Alternator
DRA3639	A4025	Alternator
DRA3643	A4075	Alternator
DRA3646	A4006	Alternator
DRA3648	A4035	Alternator
DRA3649	A4028	Alternator
DRA3653	A4021	Alternator
DRA3655	A5002	Alternator
DRA3655N	A5002	Alternator
DRA3663	A2032	Alternator
DRA3664	A0033	Alternator
DRA3673	A3076	Alternator
DRA3676	A4079	Alternator
DRA3679	A4055	Alternator
DRA3687	A4032	Alternator
DRA3694	A2029	Alternator
DRA3695	A5004	Alternator
DRA3696	A5016	Alternator
DRA3697	A2007	Alternator
DRA3699	A5016	Alternator
DRA3704	A0051	Alternator
DRA3704N	A1010	Alternator
DRA3707	A3017	Alternator
DRA3717	A3079	Alternator
DRA3718	A3091	Alternator
DRA3719	A3028	Alternator
DRA3720	A0031	Alternator
DRA3726	A3088	Alternator
DRA3727	A3089	Alternator
DRA3736	A1014	Alternator
DRA3736N	A1014	Alternator
DRA3743	A6016	Alternator
DRA3754	A0044	Alternator
DRA3755	A3032	Alternator
DRA3756	A4064	Alternator
DRA3758	A4026	Alternator
DRA3764	A3041	Alternator
DRA3766	A4049	Alternator
DRA3767	A4057	Alternator
DRA3768	A4043	Alternator
DRA3773	A0096	Alternator
DRA3776	A3036	Alternator
DRA3777	A4013	Alternator
DRA3778	A4041	Alternator
DRA3779	A3058	Alternator
DRA3783	A3092	Alternator
DRA3787	A4054	Alternator
DRA3789	A2016	Alternator
DRA3793	A0112	Alternator
DRA3794	A2003	Alternator
DRA3794N	A2003	Alternator
DRA3804	A1001	Alternator
DRA3805	A0056	Alternator
DRA3806	A0037	Alternator
DRA3806N	A0037	Alternator
DRA3808	A3087	Alternator
DRA3809	A3072	Alternator
DRA3815	A4076	Alternator
DRA3823	A3051	Alternator
DRA3824	A9004	Alternator
DRA3824N	A9004	Alternator
DRA3828	A1013	Alternator
DRA3830	A4067	Alternator
DRA3834	A0152	Alternator
DRA3835	A5033	Alternator
DRA3836	A4033	Alternator
DRA3837	A4040	Alternator
DRA3840	A0009	Alternator
DRA3841	A3060	Alternator
DRA3846	A9006	Alternator
DRA3846N	A9006	Alternator
DRA3847	A9010	Alternator
DRA3848	A2002	Alternator
DRA3848N	A2002	Alternator
DRA3849	A2010	Alternator
DRA3863	A5019	Alternator
DRA3865	A3082	Alternator
DRA3869	A5003	Alternator
DRA3870	A0091	Alternator
DRA3875	A5017	Alternator
DRA3879	A5008	Alternator
DRA3903	A1011	Alternator
DRA3903N	A1011	Alternator
DRA3904	A1009	Alternator
DRA3904N	A1009	Alternator
DRA3905	A2011	Alternator
DRA3905N	A2011	Alternator
DRA3918	A3037	Alternator
DRA3919	A3090	Alternator
DRA3923	A0145	Alternator
DRA3924	A0057	Alternator
DRA3935	A0129	Alternator
DRA3946	A2006	Alternator
DRA3947	A2030	Alternator
DRA3948	A2006	Alternator
DRA3948N	A2006	Alternator
DRA3949	A4076	Alternator
DRA3953	A3069	Alternator
DRA3956	A3061	Alternator
DRA3957	A4080	Alternator
DRA3993	A9015	Alternator
DRA3994	A4012	Alternator
DRA4020	A0015	Alternator
DRA4027	A9003	Alternator
DRA4029	A6003	Alternator
DRA4035	A1015R	Alternator
DRA4035N	A1015R	Alternator
DRA4036	A3018	Alternator
DRA4037	A4027	Alternator
DRA4039	A3073	Alternator
DRA4043	A3056	Alternator
DRA4044	A5024	Alternator
DRA4045	A3032	Alternator
DRA4046	A3079	Alternator
DRA4049	A3063	Alternator
DRA4053	A0079	Alternator
DRA4056	A0157	Alternator
DRA4058	A3065	Alternator
DRA4065	A3094	Alternator
DRA4067	A3083	Alternator
DRA4068	A0045	Alternator
DRA4069	A3022	Alternator
DRA4070	A0101	Alternator
DRA4071	A4045	Alternator
DRA4073	A3077	Alternator
DRA4074	A3106	Alternator
DRA4075	A4034	Alternator
DRA4077	A4045	Alternator
DRA4078	A4046	Alternator
DRA4088	A3085R	Alternator
DRA4088N	A3085R	Alternator

DELCO	AS	PRODUCT
DRA4089	A0169	Alternator
DRA4094	A5010	Alternator
DRA4095	A2035	Alternator
DRA4097	A2023	Alternator
DRA4098	A5015	Alternator
DRA4099	A3052	Alternator
DRA4114	A0142	Alternator
DRA4115	A4061	Alternator
DRA4116	A0038	Alternator
DRA4117	A0171	Alternator
DRA4119	A0187	Alternator
DRA4127	A0219	Alternator
DRA4128	A0142	Alternator
DRA4130	A0094	Alternator
DRA4134	A0136	Alternator
DRA4137	A1005	Alternator
DRA4137N	A1005	Alternator
DRA4138	A1003	Alternator
DRA4143	A9016	Alternator
DRA4143N	A9016	Alternator
DRA4144	A9011	Alternator
DRA4144N	A9011	Alternator
DRA4146	A1016R	Alternator
DRA4146N	A1016R	Alternator
DRA4147	A2009	Alternator
DRA4148	A3035	Alternator
DRA4149	A3035	Alternator
DRA4150	A0094	Alternator
DRA4153	A9034	Alternator
DRA4157	A0205R	Alternator
DRA4160	A0094	Alternator
DRA4164	A0170	Alternator
DRA4166	A0205R	Alternator
DRA4166N	A0205R	Alternator
DRA4167	A0216	Alternator
DRA4168	A0217	Alternator
DRA4169	A6036	Alternator
DRA4173	A9001	Alternator
DRA4173N	A9001	Alternator
DRA4174	A9035	Alternator
DRA4174N	A9035	Alternator
DRA4177	A9017	Alternator
DRA4178	A9008	Alternator
DRA4187	A3101	Alternator
DRA4194	A3037	Alternator
DRA4197	A3067	Alternator
DRA4203	A9018	Alternator
DRA4203N	A9018	Alternator
DRA4207	A4024	Alternator
DRA4214	A3074	Alternator
DRA4218	A3057	Alternator
DRA4227	A5008	Alternator
DRA4228	A2022	Alternator
DRA4228N	A2022	Alternator
DRA4230	A0028	Alternator
DRA4236	A6010	Alternator
DRA4237	A9012	Alternator
DRA4237N	A9012	Alternator
DRA4238	A9012	Alternator
DRA4238N	A9012	Alternator
DRA4239	A6018	Alternator
DRA4243	A3078	Alternator
DRA4244	A3055	Alternator
DRA4245	A5034	Alternator
DRA4246	A5029	Alternator
DRA4247	A9020	Alternator
DRA4247N	A9020	Alternator
DRA4248	A3105	Alternator
DRA4249	A3104	Alternator
DRA4253	A3078	Alternator
DRA4254	A3055	Alternator
DRA4257	A3093	Alternator
DRA4258	A4056	Alternator
DRA4258N	A9023	Alternator
DRA4259	A0166	Alternator
DRA4263	A4073	Alternator
DRA4264	A4048	Alternator
DRA4265	A4042	Alternator
DRA4266	A3070	Alternator
DRA4270	A0097	Alternator
DRA4275	A6027	Alternator
DRA4279	A6025	Alternator
DRA4285	A2022	Alternator
DRA4286	A3068	Alternator
DRA4350	A0100	Alternator
DRA4370	A0108	Alternator
DRA4400	A0001	Alternator
DRA4420	A0023	Alternator
DRA4430	A0203	Alternator
DRA4470	A4012	Alternator
DRA4510	A0090	Alternator
DRA4560	A0141	Alternator
DRA4620	A0069	Alternator
DRA4650	A0134	Alternator
DRA4662	A0115	Alternator
DRA4700	A0104	Alternator
DRA4710	A0104	Alternator
DRA4780	A3007	Alternator
DRA4810	A3047	Alternator
DRA4832	A3005	Alternator
DRA4841	A3009	Alternator
DRA4850	A3046	Alternator
DRA4861	A3001	Alternator
DRA5020	A0107	Alternator
DRA5331	A5013	Alternator
DRA5641	A4063	Alternator
DRA5641N	A4063	Alternator
DRA5760	A4030	Alternator
DRA5820	A0070	Alternator
DRA5910	A0088	Alternator
DRA6000	A0110	Alternator
DRA6010	A4011	Alternator
DRA6060	A4067	Alternator
DRA6215	A0115	Alternator
DRA6250	A0115	Alternator
DRA6251	A0115	Alternator
DRA6260	A0092	Alternator
DRA6270	A0111	Alternator
DRA6280	A0026	Alternator
DRA6350	A0015	Alternator
DRA6510	A0086	Alternator
DRA6631	A4001	Alternator
DRA6690	A0152	Alternator
DRA6750	A4065	Alternator
DRA6790	A0106	Alternator
DRA6820	A0114	Alternator
DRA6920	A0087	Alternator
DRA7040	A0110	Alternator
DRA7051	A3049	Alternator
DRA7241	A3099R	Alternator
DRA7301	A3002	Alternator
DRA7311	A3003	Alternator
DRA7321	A3006	Alternator
DRA7410	A0001	Alternator
DRA7410N	A0001	Alternator
DRA7440	A0016	Alternator
DRA7760	A0010	Alternator
DRA7770	A0002	Alternator
DRA7990	A0003	Alternator
DRA8090	A0094	Alternator
DRA8160	A0005	Alternator
DRA8170	A0114	Alternator
DRA8290	A0021	Alternator
DRA8351	A3100R	Alternator
DRA8390	A0131	Alternator
DRA8610	A0048	Alternator
DRA8650	A0148	Alternator
DRA8791	A3057	Alternator
DRA8791N	A3057	Alternator
DRA8841	A4008	Alternator
DRA8851	A3010	Alternator
DRA8940	A0096	Alternator
DRA8950	A0048	Alternator
DRA8990	A0153	Alternator
DRA9000	A0156	Alternator
DRA9010	A0131	Alternator
DRA9030	A0117	Alternator
DRA9090	A0118	Alternator
DRA9100	A3062	Alternator
DRA9130	A0023	Alternator
DRA9210	A0119	Alternator
DRA9240	A0116	Alternator
DRA9250	A1012	Alternator
DRA9260	A0008	Alternator
DRA9300	A0163	Alternator
DRA9340	A0025	Alternator
DRA9350	A0172	Alternator
DRA9370	A0173	Alternator
DRA9490	A0029	Alternator
DRA9501	A4047	Alternator
DRA9501N	A4047	Alternator
DRA9510	A0197	Alternator
DRA9520	A0151	Alternator
DRA9530	A0022	Alternator
DRA9670	A0155	Alternator
DRA9690	A0111	Alternator
DRA9750	A0133	Alternator
DRA9790	A0007	Alternator
DRA9810	A0089	Alternator
DRA9820	A0135	Alternator
DRA9831	A3066	Alternator
DRA9881	A4001	Alternator
DRA9891	A4031	Alternator
DRA9941	A3096	Alternator
DRA9971	A3043	Alternator
DRB0002	A0139	Alternator

DELCO	AS	PRODUCT
DRB0003	A0139	Alternator
DRB0180	A0133	Alternator
DRB0201	A3029	Alternator
DRB0201N	A3029	Alternator
DRB0211	A3022	Alternator
DRB0211N	A3022	Alternator
DRB0221	A0081	Alternator
DRB0260	A0007	Alternator
DRB0270	A0177	Alternator
DRB0280	A0082	Alternator
DRB0290	A0018	Alternator
DRB0330	A0019	Alternator
DRB0340	A3081	Alternator
DRB0360	A0186	Alternator
DRB0380	A0161	Alternator
DRB0390	A0157	Alternator
DRB0400	A0113	Alternator
DRB0600	A0178	Alternator
DRB0910	A5026	Alternator
DRB0930	A0128	Alternator
DRB0940	A0080	Alternator
DRB0970	A0130	Alternator
DRB1030	A0011	Alternator
DRB1150	A0060	Alternator
DRB1190	A0162	Alternator
DRB1230	A0040	Alternator
DRB1290	A0071	Alternator
DRB1310	A0188	Alternator
DRB1320	A0173	Alternator
DRB1451	A3076	Alternator
DRB1461	A2029	Alternator
DRB1471	A3095	Alternator
DRB1490	A0127	Alternator
DRB1500	A0027	Alternator
DRB1500N	A0027	Alternator
DRB1530	A0032	Alternator
DRB1550	A0054	Alternator
DRB1590	A0035	Alternator
DRB1640	A0021	Alternator
DRB1730	A0061	Alternator
DRB1750	A0226	Starter
DRB1750N	A0226	Starter
DRB1750X	A0226	Starter
DRB1760	A0205R	Alternator
DRB1760N	A0205R	Alternator
DRB1810	A0071	Alternator
DRB1860	A0059	Alternator
DRB1870	A0046	Alternator
DRB1870N	A0046	Alternator
DRB1890	A0036	Alternator
DRB1900	A0189	Alternator
DRB1920	A0042	Alternator
DRB1930	A3027	Alternator
DRB1960	A0149	Alternator
DRB1980	A0033	Alternator
DRB2000	A0140	Alternator
DRB2020	A0041	Alternator
DRB2041	A3111	Alternator
DRB2091	A3023	Alternator
DRB2161	A3064	Alternator
DRB2350	A3030	Alternator
DRB2353	A3030	Alternator
DRB2360	A0034	Alternator
DRB2370	A0034	Alternator
DRB2370X	A0034	Alternator
DRB2380	A0034	Alternator
DRB2390	A0053	Alternator
DRB2400	A0053	Alternator
DRB2400N	A0053	Alternator
DRB2410	A0053	Alternator
DRB2410N	A0053	Alternator
DRB2520	A0032	Alternator
DRB2530	A0032	Alternator
DRB2537	A0122	Alternator
DRB2550	A0144	Alternator
DRB2570	A0067	Alternator
DRB2580	A0175	Alternator
DRB2590	A0073	Alternator
DRB2590N	A0073	Alternator
DRB2600	A0125	Alternator
DRB2600N	A0125	Alternator
DRB2640	A0158	Alternator
DRB2650	A0043	Alternator
DRB2650N	A0043	Alternator
DRB2720	A0145	Alternator
DRB2760	A0191	Alternator
DRB2780	A4023	Alternator
DRB2790	A0068	Alternator
DRB2800	A0154	Alternator
DRB2820	A0075	Alternator
DRB2840	A0049	Alternator
DRB3650	A0032	Alternator
DRB3660	A0035	Alternator
DRB3670	A0194	Alternator
DRB3890	A0011	Alternator
DRB3900	A0035	Alternator
DRB3910	A0169	Alternator
DRB4010	A0121	Alternator
DRB4020	A0047	Alternator
DRB4021	A0047	Alternator
DRB4030	A0052	Alternator
DRB4210	A0225	Alternator
DRB4300	A0050	Alternator
DRB4310	A3054	Alternator
DRB4320	A0143	Alternator
DRB4460	A3033	Alternator
DRB4480	A0160	Alternator
DRB4490	A0223	Alternator
DRB4540	A0050	Alternator
DRB4890	A0228	Alternator
DRB4910	A0076	Alternator
DRB5160	A0072	Alternator
DRB5170	A0136	Alternator
DRB5280	A0034	Alternator
DRB5290	A0053	Alternator
DRB5290N	A0053	Alternator
DRB5310	A0039	Alternator
DRB5320	A0181	Alternator
DRB5330	A0180	Alternator
DRB5340	A0190	Alternator
DRB5370	A9021	Alternator
DRB5370N	A9021	Alternator
DRB5390	A3097	Alternator
DRB5420	A0218	Alternator
DRB5430	A0072	Alternator
DRB5490	A0120	Alternator
DRB5821	A6028	Alternator
DRB5831	A6033	Alternator
DRB5861	A6001	Alternator
DRB6120	A0224	Alternator
DRB6130	A0220	Alternator
DRB6150	A0154	Alternator
DRB6160	A0195	Alternator
DRB6190	A0196	Alternator
DRB6210	A0147	Alternator
DRB6220	A0221	Alternator
DRB6230	A0209	Alternator
DRB6250	A0164	Alternator
DRB6260	A0165	Alternator
DRB6280	A0167	Alternator
DRB6290	A0123	Alternator
DRB6300	A0208	Alternator
DRB6320	A0199	Alternator
DRB6330	A0222	Alternator
DRB6340	A0201R	Alternator
DRB6570	A0122	Alternator
DRB6580	A0137	Alternator
DRB6590	A0062	Alternator
DRB6590N	A0062	Alternator
DRB7140	A0227	Alternator
DRB7220	A0159	Alternator
DRB7340	A0213	Alternator
DRB7420	A0193	Alternator
DRB7430	A0192	Alternator
DRB7470	A0146	Alternator
DRB7490	A0207	Alternator
DRB7530	A0206	Alternator
DRB7910	A0200	Alternator
DRB8620	A0229	Alternator
DRB9320	A0211	Alternator
DRS0006	S3023	Starter
DRS0013	S0156	Starter
DRS0015	S9030	Starter
DRS0015N	S9030	Starter
DRS0016	S9029	Starter
DRS0016N	S9029	Starter
DRS0024	S0152	Starter
DRS0025	S0110	Starter
DRS0030	S1013	Starter
DRS0032	S9063	Starter
DRS0032N	S9063	Starter
DRS0037	S3062	Starter
DRS0044	S0153	Starter
DRS0045	S6029	Starter
DRS0051	S0017	Starter
DRS0056	S0037	Starter
DRS0057	S1015	Starter
DRS0063	S3017	Starter
DRS0065	S2019	Starter
DRS0072	S6028	Starter
DRS0084	S5056	Starter
DRS0085	S3057	Starter
DRS0093	S3028	Starter
DRS0099	S0186R	Starter
DRS0100	S5049	Starter
DRS0112	S3038	Starter

DELCO	AS	PRODUCT
DRS0113	S3061	Starter
DRS0114	S3039	Starter
DRS0115	S0093	Starter
DRS0122	S5036	Starter
DRS0310	S3015	Starter
DRS0390	S0247	Starter
DRS0430	S9057	Starter
DRS0470	S0077	Starter
DRS0530	S0046	Starter
DRS0590	S0183	Starter
DRS0800	S0015	Starter
DRS0950	S4007	Starter
DRS0950N	S4007	Starter
DRS0970	S0075	Starter
DRS0980	S0107	Starter
DRS0990	S0115	Starter
DRS1000	S0219(BOSCH)R	Starter
DRS1020	S9043	Starter
DRS10430	S9057	Starter
DRS1060	S4037(MM)R	Starter
DRS1063	S0111	Starter
DRS1080	S4036(MM)R	Starter
DRS1130	S9046	Starter
DRS1140	S0115	Starter
DRS1143	S0115	Starter
DRS1160	S4021	Starter
DRS1200	S0115	Starter
DRS1220	S0116	Starter
DRS1240	S0067	Starter
DRS1270	S0068	Starter
DRS1280	S0197	Starter
DRS1290	S0041	Starter
DRS1310	S0118	Starter
DRS1330	S0092	Starter
DRS1360	S0002	Starter
DRS1380	S0235	Starter
DRS1420	S0151	Starter
DRS1490	S0003	Starter
DRS1510	S0003	Starter
DRS1550	S0151	Starter
DRS1570	S0001	Starter
DRS1590	S0162	Starter
DRS1831	S3014	Starter
DRS1891	S4033	Starter
DRS1910	S0128	Starter
DRS2111	S9025	Starter
DRS2271	S5014	Starter
DRS2301	S5002	Starter
DRS2301N	S5002	Starter
DRS2320	S0015	Starter
DRS2340	S0004	Starter
DRS2343	S3009	Starter
DRS2360	S0050	Starter
DRS2380	S0016	Starter
DRS2420	S0117	Starter
DRS2480	S0220(BOSCH)R	Starter
DRS2555	S4022	Starter
DRS2590	S0072	Starter
DRS2600	S0072	Starter
DRS2610	S0205	Starter
DRS2670	S0152	Starter
DRS2700	S0145	Starter
DRS2710	S0114	Starter
DRS2720	S0110	Starter
DRS2730	S0011	Starter
DRS2740	S0007	Starter
DRS2871	S5002	Starter
DRS2872	S6017	Starter
DRS2932	S5025	Starter
DRS3018	S6001	Starter
DRS3018N	S6001	Starter
DRS3023	S6013	Starter
DRS3027	S9008	Starter
DRS3036	S5005	Starter
DRS3036N	S5005	Starter
DRS3037	S2015	Starter
DRS3045	S5016	Starter
DRS3050	S0045	Starter
DRS3075	S0183	Starter
DRS3078	S0236	Starter
DRS3080	S0217	Starter
DRS3084	S0042	Starter
DRS3088	S5008	Starter
DRS3088N	S5008	Starter
DRS3090	S0069	Starter
DRS3107	S3004	Starter
DRS3108	S3010	Starter
DRS3113	S3009	Starter
DRS3114	S3031	Starter
DRS3115	S3002	Starter
DRS3116	S3015	Starter
DRS3117	S3002	Starter
DRS3118	S3054	Starter
DRS3119	S3004	Starter
DRS3123	S4012	Starter
DRS3139	S5020	Starter
DRS3140	S0043	Starter
DRS3143	S5019	Starter
DRS3143N	S5019	Starter
DRS3144	S6004	Starter
DRS3150	S0029	Starter
DRS3150N	S0029	Starter
DRS3163	S5019	Starter
DRS3165	S2005	Starter
DRS3165N	S2005	Starter
DRS3173	S0165	Starter
DRS3178	S6020	Starter
DRS3179	S6020	Starter
DRS3183	S5020	Starter
DRS3187	S3011	Starter
DRS3196	S0247	Starter
DRS3197	S4004	Starter
DRS3202	S3001	Starter
DRS3205	S0103	Starter
DRS3207	S5017	Starter
DRS3216	S2002	Starter
DRS3217	S6027	Starter
DRS3219	S2003	Starter
DRS3223	S6022	Starter
DRS3234	S5024	Starter
DRS3235	S5021	Starter
DRS3240	S0084	Starter
DRS3243	S5025	Starter
DRS3245	S6004	Starter
DRS3257	S6010	Starter
DRS3260	S0216	Starter
DRS3263	S5013	Starter
DRS3264	S4014	Starter
DRS3267	S0069	Starter
DRS3268	S3004	Starter
DRS3270	S0247	Starter
DRS3274	S4022	Starter
DRS3277	S3013	Starter
DRS3278	S5052	Starter
DRS3279	S5004	Starter
DRS3280	S0247	Starter
DRS3284	S5003	Starter
DRS3286	S4018	Starter
DRS3287	S4005	Starter
DRS3289	S4013	Starter
DRS3304	S6026	Starter
DRS3308	S4015	Starter
DRS3314	S0195	Starter
DRS3324	S0134	Starter
DRS3326	S0113	Starter
DRS3333	S4002	Starter
DRS3336	S4011	Starter
DRS3339	S5005	Starter
DRS3343	S5046	Starter
DRS3343N	S5046	Starter
DRS3344	S5006	Starter
DRS3345	S5010	Starter
DRS3350	S0014	Starter
DRS3357	S2017	Starter
DRS3369	S9010	Starter
DRS3376	S2006	Starter
DRS3394	S2004	Starter
DRS3394N	S2004	Starter
DRS3400	S0204	Starter
DRS3408	S4006	Starter
DRS3409	S4006	Starter
DRS3410	S0047	Starter
DRS3420	S0221(BOSCH)R	Starter
DRS3427	S4001	Starter
DRS3440	S0008	Starter
DRS3450	S0065	Starter
DRS3470	S0050	Starter
DRS3474	S0103	Starter
DRS3476	S9031	Starter
DRS3478	S0239	Starter
DRS3484	S2002	Starter
DRS3490	S0002	Starter
DRS3501	S5012	Starter
DRS3511	S5012	Starter
DRS3518	S1007	Starter
DRS3535	S9001	Starter
DRS3535N	S9001	Starter
DRS3539	S6003	Starter
DRS3545	S3019	Starter
DRS3548	S0126	Starter
DRS3548N	S0126	Starter
DRS3553	S0098	Starter
DRS3555	S4022	Starter
DRS3557	S4017	Starter
DRS3564	S0247	Starter
DRS3567	S0158	Starter

DELCO	AS	PRODUCT
DRS3568	S9015	Starter
DRS3577	S3053	Starter
DRS3579	S5034	Starter
DRS3583	S4027	Starter
DRS3587	S4027	Starter
DRS3593	S4009	Starter
DRS3600	S0055	Starter
DRS3610	S0034	Starter
DRS3610N	S0034	Starter
DRS3614	S4034	Starter
DRS3616	S2010	Starter
DRS3617	S3002	Starter
DRS3618	S3002	Starter
DRS3619	S3056	Starter
DRS3623	S3004	Starter
DRS3624	S3008	Starter
DRS3625	S3030	Starter
DRS3630	S0133	Starter
DRS3636	S0125	Starter
DRS3640	S0132	Starter
DRS3644	S6014	Starter
DRS3646	S6019	Starter
DRS3650	S0127	Starter
DRS3654	S3001	Starter
DRS3660	S0148	Starter
DRS3676	S0161	Starter
DRS3676N	S9035	Starter
DRS3679	S2001	Starter
DRS3679N	S2001	Starter
DRS3683	S0241	Starter
DRS3684	S4035	Starter
DRS3686	S0215	Starter
DRS3689	S3032	Starter
DRS3690	S4010	Starter
DRS3693	S6016	Starter
DRS3696	S9043	Starter
DRS3697	S4020	Starter
DRS3706	S3063	Starter
DRS3715	S9009	Starter
DRS3718	S6007	Starter
DRS3719	S0106	Starter
DRS3720	S0040	Starter
DRS3725	S5037	Starter
DRS3728	S5033	Starter
DRS3729	S2011	Starter
DRS3730	S0001	Starter
DRS3735	S5009	Starter
DRS3738	S3052	Starter
DRS3739	S3024	Starter
DRS3743	S3001	Starter
DRS3746	S5040	Starter
DRS3763	S0009	Starter
DRS3765	S0061	Starter
DRS3766	S0117	Starter
DRS3775	S3021	Starter
DRS3776	S3008	Starter
DRS3778	S0161	Starter
DRS3789	S4007	Starter
DRS3797	S9002	Starter
DRS3797N	S9002	Starter
DRS3805	S6012	Starter
DRS3807	S0240	Starter
DRS3809	S0169	Starter
DRS3813	S3046	Starter
DRS3814	S3048	Starter
DRS3815	S3034	Starter
DRS3816	S4028	Starter
DRS3817	S3058R	Starter
DRS3819	S0234	Starter
DRS3823	S0212	Starter
DRS3825	S9004	Starter
DRS3825N	S9004	Starter
DRS3826	S9011	Starter
DRS3827	S0231	Starter
DRS3828	S0080	Starter
DRS3829	S0136	Starter
DRS3834	S3049	Starter
DRS3835	S0088	Starter
DRS3836	S0088	Starter
DRS3836N	S0088	Starter
DRS3837	S0088	Starter
DRS3837N	S0088	Starter
DRS3838	S3024	Starter
DRS3849	S2018	Starter
DRS3850	S3005	Starter
DRS3855	S6011	Starter
DRS3856	S2009	Starter
DRS3863	S5007	Starter
DRS3863N	S5007	Starter
DRS3869	S5026	Starter
DRS3869N	S5026	Starter
DRS3884	S5044	Starter
DRS3887	S4025	Starter
DRS3893	S3020	Starter
DRS3897	S6005	Starter
DRS3898	S0108	Starter
DRS3899	S6023	Starter
DRS3899N	S6023	Starter
DRS3903	S3016	Starter
DRS3904	S5038	Starter
DRS3905	S0035	Starter
DRS3910	S0144	Starter
DRS3914	S5043	Starter
DRS3915	S5045	Starter
DRS3916	S5032	Starter
DRS3919	S2010	Starter
DRS3923	S6024	Starter
DRS3923N	S6024	Starter
DRS3924	S6008	Starter
DRS3924N	S6008	Starter
DRS3925	S9003	Starter
DRS3929	S4031	Starter
DRS3935	S0168	Starter
DRS3940	S4039	Starter
DRS3944	S2007	Starter
DRS3945	S3022	Starter
DRS3946	S3051	Starter
DRS3948	S3012	Starter
DRS3949	S3027	Starter
DRS3954	S4030	Starter
DRS3955	S3058R	Starter
DRS3956	S9032	Starter
DRS3956N	S9032	Starter
DRS3957	S9020	Starter
DRS3957N	S9020	Starter
DRS3963	S3064	Starter
DRS3965	S6021	Starter
DRS3967	S0139	Starter
DRS3968	S9036	Starter
DRS3968N	S9036	Starter
DRS3969	S9033	Starter
DRS3969N	S9033	Starter
DRS3974	S0211	Starter
DRS3975	S9015	Starter
DRS3975N	S9015	Starter
DRS3976	S3029	Starter
DRS3977	S4028	Starter
DRS3978	S4028	Starter
DRS3984	S5050	Starter
DRS3985	S5035	Starter
DRS3987	S9062	Starter
DRS3987N	S9062	Starter
DRS3988	S5042	Starter
DRS4341	S5023	Starter
DRS4361	S6018	Starter
DRS4461	S6009	Starter
DRS4560	S0023	Starter
DRS4580	S0187	Starter
DRS4730	S0112	Starter
DRS4740	S0117	Starter
DRS4810	S0190R	Starter
DRS4820	S0083	Starter
DRS4830	S0077	Starter
DRS4840	S0052	Starter
DRS4900	S0044	Starter
DRS4910	S0063	Starter
DRS4940	S0051	Starter
DRS4971	S6002	Starter
DRS4991	S5012	Starter
DRS5010	S3015	Starter
DRS5090	S0161	Starter
DRS5173	S5015	Starter
DRS5178	S0028	Starter
DRS5320	S0038	Starter
DRS5610	S0166	Starter
DRS5670	S0022	Starter
DRS6021	S2015	Starter
DRS6230	S0057	Starter
DRS6240	S0039	Starter
DRS6280	S0126	Starter
DRS6280N	S0126	Starter
DRS6290	S0062	Starter
DRS6300	S0033	Starter
DRS6330	S0054	Starter
DRS6340	S0142	Starter
DRS6380	S0087	Starter
DRS6390	S0143	Starter
DRS6431	S5018	Starter
DRS6470	S0124	Starter
DRS6470N	S9019	Starter
DRS6500	S0238	Starter
DRS6520	S0003	Starter
DRS6550	S0174	Starter
DRS6560	S0056	Starter
DRS6570	S3052	Starter
DRS6660	S0059	Starter

DELCO	AS	PRODUCT
DRS6700	S0146	Starter
DRS6750	S0131	Starter
DRS6780	S0030	Starter
DRS6790	S4016	Starter
DRS6800	S0104	Starter
DRS6870	S0105	Starter
DRS6880	S0098	Starter
DRS6880N	S0098	Starter
DRS6890	S0034	Starter
DRS6950	S0017	Starter
DRS6980	S0025	Starter
DRS6990	S0005	Starter
DRS7000	S0006	Starter
DRS7020	S0064	Starter
DRS7041	S4033	Starter
DRS7041N	S4033	Starter
DRS7050	S0021	Starter
DRS7060	S0096	Starter
DRS7060N	S0096	Starter
DRS7110	S0073	Starter
DRS7120	S1013	Starter
DRS7120N	S3003	Starter
DRS7230	S0204	Starter
DRS7240	S0037	Starter
DRS7240N	S0037	Starter
DRS7250	S0010	Starter
DRS7260	S0026	Starter
DRS7260N	S3040	Starter
DRS7270	S0130	Starter
DRS7300	S0093	Starter
DRS7320	S0019	Starter
DRS7381	S3001	Starter
DRS7391	S3001	Starter
DRS7420	S0036	Starter
DRS7430	S0066	Starter
DRS7450	S0094	Starter
DRS7460	S0025	Starter
DRS7490	S0018	Starter
DRS7500	S0020	Starter
DRS7520	S0196	Starter
DRS7530	S0157	Starter
DRS7530N	S0157	Starter
DRS7760	S0024	Starter
DRS7810	S0097	Starter
DRS7830	S0027	Starter
DRS7840	S3007	Starter
DRS7850	S0012	Starter
DRS7860	S0041	Starter
DRS7870	S0040	Starter
DRS7920	S0098	Starter
DRS7950	S0166	Starter
DRS7960	S0206	Starter
DRS7980	S0160	Starter
DRS7983	S0159	Starter
DRS7990	S0070	Starter
DRS7990N	S0070	Starter
DRS8010	S3003	Starter
DRS8010N	S3003	Starter
DRS8020	S0176	Starter
DRS8030	S0154	Starter
DRS8040	S0048	Starter
DRS8040N	S0048	Starter

DELCO	AS	PRODUCT
DRS8060	S0233	Starter
DRS8070	S0209	Starter
DRS8090	S0135	Starter
DRS8090N	S0135	Starter
DRS8110	S3045	Starter
DRS8210	S0217	Starter
DRS8230	S0247	Starter
DRS8250	S0047	Starter
DRS8270	S0091	Starter
DRS8310	S3002	Starter
DRS8310N	S3002	Starter
DRS8350	S0141	Starter
DRS8370	S0074	Starter
DRS8380	S0049	Starter
DRS8390	S0248	Starter
DRS8420	S0221(BOSCH)R	Starter
DRS8430	S0032	Starter
DRS8450	S0246	Starter
DRS8460	S0073	Starter
DRS8480	S0168	Starter
DRS8490	S0099	Starter
DRS8500	S0224	Starter
DRS8571	S3020	Starter
DRS8630	S3036	Starter
DRS8680	S0020	Starter
DRS8770	S0225	Starter
DRS8780	S0076	Starter
DRS8800	S0109	Starter
DRS8830	S0226	Starter
DRS8850	S0087	Starter
DRS8860	S0223(BOSCH)	Starter
DRS8910	S0155	Starter
DRS8911	S0155	Starter
DRS8920	S0119	Starter
DRS8930	S0095	Starter
DRS8940	S0192	Starter
DRS8950	S0099	Starter
DRS8960	S0089	Starter
DRS8960N	S0089	Starter
DRS8970	S0163	Starter
DRS8990	S0078	Starter
DRS9020	S0129	Starter
DRS9030	S0103	Starter
DRS9040	S3045	Starter
DRS9550	S0146	Starter
DRS9980	S0093	Starter
DRT0070	S0085	Starter
DRT0220	S3043	Starter
DRT0230	S3037	Starter
DRT0240	S3055	Starter
DRT0250	S0090	Starter
DRT0260	S0243	Starter
DRT0270	S0214	Starter
DRT0290	S3044	Starter
DRT0290N	S3044	Starter
DRT0300	S0140	Starter
DRT0320	S0229	Starter
DRT0350	S0227	Starter
DRT0880	S0071	Starter
DRT0890	S0244	Starter
DRT0900	S0185	Starter
DRT1060	S0168	Starter

DELCO	AS	PRODUCT
DRT1190	S0178	Starter
DRT1210	S0171	Starter
DRT1230	S0228	Starter
DRT1240	S3018	Starter
DRT1270	S0210	Starter
DRT1360	S0218	Starter
DRT1480	S0138	Starter
DRT1490	S0137	Starter
DRT1500	S0242	Starter
DRT1610	S0175	Starter
DRT1810	S0123	Starter
DRT2250	S0173	Starter
DRT2260	S0194	Starter
DRT230	S3037	Starter
DRT2490	S0232	Starter
DRX08378	A1014	Alternator
DRX67095	S1015	Starter
DRX67131	S0002	Starter
DRX67149	S1015	Starter
DRZ0144	A1007	Alternator
DRZ0151	A1008	Alternator
DRZ0154	A1007	Alternator
DRZ0158	A1007	Alternator
DRZ0163	A1008	Alternator
DRZ0165	A1008	Alternator
DRZ0166	A1007	Alternator
DRZ0196	A1006	Alternator
DRZ5115	S1006	Starter
DRZ5119	S1009	Starter
DRZ5124	S1012	Starter
DRZ5150	S0058	Starter
DRZ5152	S1002	Starter
DRZ5153	S1003	Starter
DRZ5155	S1003	Starter
DRZ5161	S0058	Starter
DRZ5162	S0031	Starter
DRZ5164	S1002	Starter
DRZ5167	S1001	Starter
DRZ5168	S1007	Starter
DRZ5173	S5015	Starter
DRZ5176	S1005	Starter
DRZ5178	S0028	Starter
DVR108	ARE1007	Regulator
DVR111	ARE1003	Regulator
DVR112	ARE1013	Regulator
DVR113	ARE1014	Regulator
E640	ARE6001	Regulator
F613	ARE9003	Regulator
F903	SS9021	Starter solenoid
IAT08790	ARC9016	Rectifier
PG260NA	S9017	Starter
for PG260NA	SG9004	Starter gear

DELPHI	AS	PRODUCT
10480403	A1016R	Alternator
10480404	A1015R	Alternator
10480407	A1016R	Alternator
10480408	A1015R	Alternator
461	A1014	Alternator
CE2001412B1	IC9001	Ignition Coil
CE2003012B1	IC9002	Ignition Coil
CE2004212B1	IC9003	Ignition Coil

DENSO	AS	PRODUCT
012580-4510	ARC6012	Rectifier
012580-4630	ARC6012	Rectifier
012580-4760	ARC6012	Rectifier
021040-0960	AFP6006	FW pulley
021040-0970	AFP6004	FW pulley
021040-1001	AFP6003	FW Pulley
021040-1040	AFP6003	FW Pulley
021040-1042	AFP6003	FW Pulley
021040-1070	AFP6005	FW pulley
021040-1110	AFP6008	FW pulley
021040-1130	AFP9008	FW pulley
021040-1140	AFP6006	FW pulley
021040-1170	AFP9008	FW pulley
021040-1180	AFP6003	FW Pulley
021040-1190	AFP6008	FW pulley
021040-1320	AFP9008	FW pulley
021040-1400	AFP6009	FW pulley
021040-1441	AFP9008	FW pulley
021040-1450	AFP6008	FW pulley
021040-1570	AFP6009	FW pulley
021100-2291	AS6002	Stator
021100-2461	AS6002	Stator
021100-2950	AS6002	Stator
021100-3200	AS6001	Stator
021100-3220	AS6001	Stator
021100-3400	AS6003	Stator
021100-3401	AS6003	Stator
021100-3500	AS6001	Stator
021100-3510	AS6001	Stator
021100-3520	AS6003	Stator
021100-3570	AS6002	Stator
021100-3571	AS6002	Stator
021100-3850	AS6003	Stator
021100-3930	AS6001	Stator
021100-4110	AS6001	Stator
021100-4120	AS6001	Stator
021100-4130	AS6001	Stator
021100-4180	AS6001	Stator
021100-4280	AS6001	Stator
021100-4330	AS6003	Stator
021100-4370	AS6002	Stator
021100-4390	AS6003	Stator
021100-4930	AS6001	Stator
021100-5200	AS6003	Stator
021200-2120	SA6004	Starter armature
021200-3251	SS5030	Starter solenoid
021580-2160	ARC6005	Rectifier
021580-2230	ARC6005	Rectifier
021580-2250	ARC6008	Rectifier
021580-2260	ARC6008	Rectifier
021580-2330	ARC6008	Rectifier
021580-2340	ARC6009	Rectifier
021580-2341	ARC6009	Rectifier
021580-2342	ARC6009	Rectifier
021580-2350	ARC6009	Rectifier
021580-2351	ARC6009	Rectifier
021580-2352	ARC6009	Rectifier
021580-2500	ARC6008	Rectifier
021580-2511	ARC6001	Rectifier
021580-2512	ARC6001	Rectifier
021580-2521	ARC6001	Rectifier
021580-2522	ARC6001	Rectifier
021580-2610	ARC6005	Rectifier
021580-2620	ARC6005	Rectifier
021580-2910	ARC6009	Rectifier
021580-2950	ARC6006	Rectifier
021580-3080	ARC6004	Rectifier
021580-3110	ARC6004	Rectifier
021580-3130	ARC6023	Rectifier
021580-3340	ARC6004	Rectifier
021580-3400	ARC6006	Rectifier
021580-3401	ARC6006	Rectifier
021580-3640	ARC6003	Rectifier
021580-3660	ARC6002	Rectifier
021580-3830	ARC6002	Rectifier
021580-3850	ARC6016	Rectifier
021580-3990	ARC6014	Rectifier
021580-4020	ARC6010	Rectifier
021580-4030	ARC6002	Rectifier
021580-4040	ARC6013	Rectifier
021580-4080	ARC6002	Rectifier
021580-4100	ARC6013	Rectifier
021580-4110	ARC6014	Rectifier
021580-4210	ARC6016	Rectifier
021580-4250	ARC6017	Rectifier
021580-4310	ARC6023	Rectifier
021580-4340	ARC6023	Rectifier
021580-4430	ARC6013	Rectifier
021580-4480	ARC6002	Rectifier
021580-4510	ARC6002	Rectifier
021580-4590	ARC6017	Rectifier
021580-4610	ARC6013	Rectifier
021580-4630	ARC6002	Rectifier
021580-4640	ARC6006	Rectifier
021580-4660	ARC6003	Rectifier
021580-4670	ARC6003	Rectifier
021580-4690	ARC6013	Rectifier
021580-4700	ARC6016	Rectifier
021580-4760	ARC6002	Rectifier
021580-4780	ARC6006	Rectifier
021580-4790	ARC6006	Rectifier
021580-4820	ARC6010	Rectifier
021580-4840	ARC6003	Rectifier
021580-4850	ARC6018	Rectifier
021580-5000	ARC6005	Rectifier
021580-5040	ARC6013	Rectifier
021580-5050	ARC6017	Rectifier
021580-5060	ARC6001	Rectifier
021580-5160	ARC6002	Rectifier
021580-5260	ARC6010	Rectifier
021580-5810	ARC6012	Rectifier
021620-2010	ABH6001	A. Brush holder
021620-2130	ABH6001	A. Brush holder
021620-2180	ABH6001	A. Brush holder
021620-2190	ABH6001	A. Brush holder
021620-2201	ABH6001	A. Brush holder
021620-2220	ABH6001	A. Brush holder
021620-2310	ABH6001	A. Brush holder
021620-2360	ABH6001	A. Brush holder
021620-2530	ABH6002	A. Brush holder
021620-2630	ABH6001	A. Brush holder
021620-2720	ABH6002	A. Brush holder
021620-2750	ABH6001	A. Brush holder
021620-2760	ABH6001	A. Brush holder
021620-2870	ABH6001	A. Brush holder
021621-0650	ABH6001	A. Brush holder
021630-0220	ABH6003	A. Brush holder
021630-0530	ABH6003	A. Brush holder
021660-0130	AB6001	Alt. Brush set
021660-0131	AB6001	Alt. Brush set
021660-0311	AB6003	Alt. Brush set
021660-0330	AB6001	Alt. Brush set
021660-0370	AB6004	Alt. Brush set
021660-0390	AB6005	Alt. Brush set
021660-0420	AB6005	Alt. Brush set
021660-0460	AB6005	Alt. Brush set
021660-0510	AB6005	Alt. Brush set
021660-0530	AB6003	Alt. Brush set
025300-1730	SD6006	Drive
026000-0400	ARE6016	Regulator
026000-4200	ARE6016	Regulator
028000-0085	SD6001	Drive
028000-0510	S6009	Starter
028000-5710	S6022	Starter
028000-5860	S6010	Starter
028000-5861	S6010	Starter
028000-5862	S6010	Starter
028000-5863	S6010	Starter
028000-5864	S6010	Starter
028000-5880	S6003	Starter
028000-5881	S6003	Starter
028000-5882	S6003	Starter
028000-5883	S6003	Starter
028000-5884	S6003	Starter
028000-5900	S6009	Starter
028000-6011	S6010	Starter
028000-6012	S6010	Starter
028000-6200	S6027	Starter
028000-7000	S6004	Starter
028000-7001	S6004	Starter
028000-7002	S6004	Starter
028000-7003	S6004	Starter
028000-7004	S6004	Starter
028000-7370	S6001	Starter
028000-7372	S6001	Starter
028000-7373	S6001	Starter
028000-7560	S6009	Starter
028000-7790	S6004	Starter
028000-7791	S6004	Starter
028000-8570	S5023	Starter
028000-8760	S6001	Starter
028000-8761	S6001	Starter
028000-8762	S6001	Starter
028000-9140	S6006	Starter
028000-9141	S6006	Starter
028000-9142	S6006	Starter
028000-9260	S6013	Starter
028000-9261	S6013	Starter
028000-9270	S6009	Starter
028000-9760	S9012	Starter
028000-9800	S5023	Starter
028000-9940	S6018	Starter
028099-0770	SB6001	Sta. Brush set
028099-2620	SB6001	Sta. Brush set
028099-2628	SB6001	Sta. Brush set
028099-2670	SB6001	Sta. Brush set

DENSO	AS	PRODUCT
028099-2680	SP6016	Solenoids parts
028099-2690	SP6003	Solenoids parts
028099-2691	SP6015	Solenoids parts
028099-2700	SD6019	Drive
028099-2770	SB6001	Sta. Brush set
028099-2820	SP6016	Solenoids parts
028099-2920	SP6014	Solenoids parts
028099-2921	SP6014	Solenoids parts
028099-2940	SD6003	Drive
028099-3010	SP6014	Solenoids parts
028099-3020	SP6014	Solenoids parts
028099-3030	SP6016	Solenoids parts
028099-3031	SP6016	Solenoids parts
028099-3130	SD6025	Drive
028099-3160	SP6019	Solenoids parts
028099-3390	SP6014	Solenoids parts
028099-3399	SP6014	Solenoids parts
028099-3430	SB6004	Sta. Brush set
028099-3510	SB6002	Sta. Brush set
028099-3550	SB6003	Sta. Brush set
028099-3560	SB6006	Sta. Brush set
028099-3570	SB6006	Sta. Brush set
028099-3800	SD6003	Drive
028099-3860	SP6016	Solenoids parts
028099-3950	SB6004	Sta. Brush set
028099-5450	SB6005	Sta. Brush set
028099-5730	SD6025	Drive
028099-6180	SB6007	Sta. Brush set
028099-6820	SP6014	Solenoids parts
028099-7170	SB6003	Sta. Brush set
028099-7171	SB6003	Sta. Brush set
028099-7202	SP6017	Solenoids parts
028099-7210	SP6020	Solenoids parts
028099-7212	SP6020	Solenoids parts
028099-7220	SP6014	Solenoids parts
028099-7230	SP6011	Solenoids parts
028099-7231	SP6020	Solenoids parts
028099-7800	SP6017	Solenoids parts
028099-7812	SP6017	Solenoids parts
028099-8672	SP6016	Solenoids parts
028099-8701	SP6016	Solenoids parts
028099-9130	SP6011	Solenoids parts
028099-9131	SP6011	Solenoids parts
028200-1531	SA6004	Starter armature
028200-1590	SA6002	Starter armature
028200-1780	SA6003	Starter armature
028200-1820	SA6001	Starter armature
028200-1890	SA6007	Starter armature
028200-1900	SA6003	Starter armature
028200-2120	SA6004	Starter armature
028200-2140	SA6005	Starter armature
028200-2230	SA6002	Starter armature
028200-4540	SA6004	Starter armature
028200-5040	SA6007	Starter armature
028200-5250	SA6006	Starter armature
028200-6220	SA6003	Starter armature
028200-6230	SA6003	Starter armature
028200-7430	SA6005	Starter armature
028200-7440	SA6007	Starter armature
028200-8330	SA1012	Starter armature
028300-0541	SD6001	Drive
028300-0611	SD6001	Drive
028300-0630	SD6001	Drive
028300-0660	SD6002	Drive
028300-0700	SD6001	Drive
028300-0710	SD6001	Drive
028300-0800	SD6001	Drive
028300-0801	SD6001	Drive
028300-0830	SD6013	Drive
028300-0831	SD6013	Drive
028300-0900	SD6002	Drive
028300-0901	SD6002	Drive
028300-0911	SD6002	Drive
028300-1600	SD6003	Drive
028300-1601	SD6003	Drive
028300-1602	SD6003	Drive
028300-1603	SD6003	Drive
028300-1690	SD6001	Drive
028300-1730	SD6006	Drive
028300-1790	SD6003	Drive
028300-1791	SD6003	Drive
028300-1800	SD6003	Drive
028300-1840	SD6005	Drive
028300-1841	SD6005	Drive
028300-1842	SD6005	Drive
028300-1930	SD6002	Drive
028300-1950	SD6002	Drive
028300-1951	SD6002	Drive
028300-1970	SD6018	Drive
028300-2000	SD6003	Drive
028300-2011	SD6006	Drive
028300-2012	SD6006	Drive
028300-2040	SD6020	Drive
028300-2070	SD6006	Drive
028300-2081	SD6025	Drive
028300-2110	SD6003	Drive
028300-2111	SD6003	Drive
028300-2200	SD6012	Drive
028300-2220	SD6025	Drive
028300-2222	SD6025	Drive
028300-2240	SD6002	Drive
028300-2270	SD6003	Drive
028300-3320	SD6013	Drive
028300-3321	SD6013	Drive
028300-3340	SD6012	Drive
028300-3350	SD6002	Drive
028300-3351	SD6001	Drive
028300-3490	SD6002	Drive
028300-3570	SD6008	Drive
028300-3571	SD6008	Drive
028300-3631	SD6003	Drive
028300-3690	SD6029	Drive
028300-3691	SD6029	Drive
028300-3710	SD6002	Drive
028300-3750	SD6002	Drive
028300-3810	SD6012	Drive
028300-3880	SD6007	Drive
028300-3930	SD6025	Drive
028300-3950	SD6006	Drive
028300-3952	SD6006	Drive
028300-4011	SD6018	Drive
028300-4081	SD6018	Drive
028300-4082	SD6018	Drive
028300-4160	SD6003	Drive
028300-4170	SD6006	Drive
028300-4190	SD6015	Drive
028300-4200	SD6015	Drive
028300-4300	SD6003	Drive
028300-4320	SD6004	Drive
028300-4350	SD6011	Drive
028300-4390	SD6009	Drive
028300-4410	SD6008	Drive
028300-4420	SD6003	Drive
028300-4471	SD6007	Drive
028300-4550	SD6006	Drive
028300-4551	SD6006	Drive
028300-5040	SD6010	Drive
028300-5080	SD6011	Drive
028300-5090	SD6006	Drive
028300-5091	SD6006	Drive
028300-5180	SD6008	Drive
028300-5300	SD6025	Drive
028300-5340	SD6003	Drive
028300-5350	SD6003	Drive
028300-5400	SD6032	Drive
028300-5450	SD6029	Drive
028300-5490	SD6023	Drive
028300-5530	SD6006	Drive
028300-5650	SD6020	Drive
028300-5651	SD6020	Drive
028300-5670	SD6020	Drive
028300-5710	SD6023	Drive
028300-5730	SD6017	Drive
028300-5800	SD6014	Drive
028300-5820	SD6010	Drive
028300-5850	SD6009	Drive
028300-5990	SD6003	Drive
028300-6070	SD6016	Drive
028300-6190	SD6033	Drive
028300-6210	SD6023	Drive
028300-6670	SD6008	Drive
028300-6680	SD6031	Drive
028300-6690	SD6029	Drive
028300-6691	SD6029	Drive
028300-6692	SD6029	Drive
028300-6700	SD6012	Drive
028300-6850	SD6025	Drive
028300-6860	SD6026	Drive
028300-6940	SD6003	Drive
028300-6960	SD6016	Drive
028300-6990	SD6027	Drive
028300-7000	SD6025	Drive
028300-7120	SD6003	Drive
028300-7170	SD6027	Drive
028300-7590	SD6002	Drive
028300-7700	SD6024	Drive
028300-7802	SD6020	Drive
028300-7920	SD6022	Drive
028300-7980	SD6027	Drive
028300-7990	SD6027	Drive
028300-8150	SD6024	Drive
028300-8350	SD6027	Drive
028301-0010	SD6028	Drive
028301-0190	SD6028	Drive
028301-0410	SD6028	Drive
028403-0081	SBU9032	Bushing

DENSO	AS	PRODUCT
028403-0082	SBU9032	Bushing
028510-0500	SBH6002	S. Brush holder
028510-0880	SBH6001	S. Brush holder
028510-5390	SBH6002	S. Brush holder
028530-1090	SB6008	Sta. Brush set
028530-1100	SB6008	Sta. Brush set
028531-0450	SB6001	Sta. Brush set
028531-0632	SB6006	Sta. Brush set
028531-0680	SB6002	Sta. Brush set
028531-0720	SB6004	Sta. Brush set
028531-0730	SB6004	Sta. Brush set
028531-0840	SB6003	Sta. Brush set
028531-0946	SB6001	Sta. Brush set
028531-3510	SB6002	Sta. Brush set
028531-5050	SB6005	Sta. Brush set
028531-5630	SB6003	Sta. Brush set
028531-5650	SB6006	Sta. Brush set
028531-6660	SB6005	Sta. Brush set
053400-0150	SS6002	Starter solenoid
053400-1040	SS6001	Starter solenoid
053400-1041	SS6001	Starter solenoid
053400-1102	SS6001	Starter solenoid
053400-1260	SS6001	Starter solenoid
053400-1300	SS6003	Starter solenoid
053400-1530	SS6001	Starter solenoid
053400-1810	SS6002	Starter solenoid
053400-1811	SS6002	Starter solenoid
053400-1830	SS6002	Starter solenoid
053400-2160	SS6002	Starter solenoid
053400-2251	SS6001	Starter solenoid
053400-2340	SS6001	Starter solenoid
053400-2440	SS6001	Starter solenoid
053400-2551	SS6002	Starter solenoid
053400-2557	SS6002	Starter solenoid
053400-2880	SS6001	Starter solenoid
053400-3330	SS6001	Starter solenoid
053400-3340	SS6002	Starter solenoid
053400-3350	SS6001	Starter solenoid
053400-3410	SS6001	Starter solenoid
053400-3710	SS6001	Starter solenoid
053400-3720	SS6001	Starter solenoid
053400-3810	SS6001	Starter solenoid
053400-3840	SS6003	Starter solenoid
053400-3890	SS6003	Starter solenoid
053400-3931	SS6003	Starter solenoid
053400-3932	SS6003	Starter solenoid
053400-4731	SD6021	Drive
053400-4870	SS6003	Starter solenoid
053400-5050	SS6003	Starter solenoid
053400-5240	SS6003	Starter solenoid
053400-5280	SS6004	Starter solenoid
053400-5282	SS6004	Starter solenoid
053400-5290	SS6004	Starter solenoid
053400-5292	SS6004	Starter solenoid
053400-5560	SS6003	Starter solenoid
053400-6500	SS6003	Starter solenoid
053400-6550	SS6003	Starter solenoid
053400-7130	SS6009	Starter solenoid
053400-7220	SS6003	Starter solenoid
053400-7270	SS6003	Starter solenoid
053400-7650	SS6003	Starter solenoid
053400-7800	SS6005	Starter solenoid
053400-8510	SS6005	Starter solenoid
053400-8690	SS6009	Starter solenoid
053400-8730	SS6009	Starter solenoid
053400-8750	SS6007	Starter solenoid
053400-8780	SS6009	Starter solenoid
053660-0401	SP6007	Solenoids parts
053660-0402	SP6007	Solenoids parts
053660-0442	SP6007	Solenoids parts
053660-7100	SP6007	Solenoids parts
053660-7120	SP6008	Solenoids parts
053660-7121	SP6008	Solenoids parts
053660-7240	SP6009	Solenoids parts
053660-7241	SP6009	Solenoids parts
053660-7250	SP6007	Solenoids parts
053660-7260	SP6007	Solenoids parts
053660-7710	SP6007	Solenoids parts
053680-7120	SP6008	Solenoids parts
071011-0750	AFP6007	FW pulley
072011-0750	AFP6007	FW pulley
081020-0010	AFP6001	FW pulley
100211-1661	A6022R	Alternator
100211-1662	A6022R	Alternator
100211-3352	A6017	Alternator
100211-3370	A6024	Alternator
100211-4000	A6020	Alternator
100211-4001	A6020	Alternator
100211-4002	A6020	Alternator
100211-4003	A6020	Alternator
100211-4004	A6020	Alternator
100211-5730	A6024	Alternator
100211-6240	A6004	Alternator
100211-6660	A6024	Alternator
100211-6730	A6024	Alternator
100211-7000	A6017	Alternator
100211-7050	A6017	Alternator
100211-7170	A6016	Alternator
100211-7340	A5026	Alternator
100211-7370	A6016	Alternator
100211-8030	A6017	Alternator
100211-8031	A6017	Alternator
100211-8370	A0104	Alternator
100211-9310	A6021	Alternator
100211-9760	A5026	Alternator
100211-9940	A6005	Alternator
101210-0160	A4082	Alternator
101210-0161	A4082	Alternator
101210-0162	A4082	Alternator
101210-0921	A4068	Alternator
101210-0960	A4070	Alternator
101210-0961	A4070	Alternator
101210-0970	A4071	Alternator
101210-0971	A4071	Alternator
101210-1080	A4083	Alternator
101210-1081	A4083	Alternator
101210-1120	A4074	Alternator
101210-1190	A4074	Alternator
101211-0050	A6009	Alternator
101211-0051	A6009	Alternator
101211-0052	A6009	Alternator
101211-0060	A6012	Alternator
101211-0061	A6012	Alternator
101211-0062	A6012	Alternator
101211-0120	A6012	Alternator
101211-0181	A6012	Alternator
101211-0240	A5026	Alternator
101211-0340	A6009	Alternator
101211-0341	A6009	Alternator
101211-0342	A6009	Alternator
101211-0580	A6032	Alternator
101211-0581	A6032	Alternator
101211-0582	A6032	Alternator
101211-0740	A6009	Alternator
101211-0741	A6009	Alternator
101211-2100	A6021	Alternator
101211-3040	A6021	Alternator
101211-3200	A6021	Alternator
101211-3370	A6024	Alternator
101211-3770	A6024	Alternator
101211-4580	A6012	Alternator
101211-5020	A6012	Alternator
101211-5150	A6009	Alternator
101211-5240	A6012	Alternator
101211-5720	A6032	Alternator
101211-5970	A6009	Alternator
101211-6340	A6031(DENSO)R	Alternator
101211-7010	A6005	Alternator
101211-7011	A6005	Alternator
101211-7870	A6035	Alternator
101211-7871	A6035	Alternator
101211-7872	A6035	Alternator
102211-0320	A4068	Alternator
102211-0500	A0061	Alternator
102211-0750	A0224	Alternator
102211-0800	A6006	Alternator
102211-0860	A6029	Alternator
102211-0870	A6030	Alternator
102211-0920	A0224	Alternator
102211-0921	A0224	Alternator
102211-1450	A6002	Alternator
102211-1451	A6002	Alternator
102211-1460	A6003	Alternator
102211-1461	A6003	Alternator
102211-1650	A6003	Alternator
102211-1680	A6001	Alternator
102211-1950	A6033	Alternator
102211-1951	A6033	Alternator
102211-1960	A6028	Alternator
102211-2220	A6036	Alternator
102211-2221	A6036	Alternator
102211-2222	A6036	Alternator
102211-2223	A6036	Alternator
102211-2230	A6034	Alternator
102211-2231	A6034	Alternator
102211-2232	A6034	Alternator
102211-2233	A6034	Alternator
102211-2234	A6034	Alternator
102211-2310	A6025	Alternator
102211-2760	A6007	Alternator
102211-2780	A6015	Alternator
102211-2810	A6025	Alternator
102211-5090	A6009	Alternator
102211-5600	A6025	Alternator
102211-5660	A6037	Alternator
102211-8010	A6013	Alternator

DENSO	AS	PRODUCT
102211-8030	A4028	Alternator
102211-8031	A4028	Alternator
102211-8040	A4035	Alternator
102211-8041	A4035	Alternator
102211-8060	A4021	Alternator
102211-8061	A4021	Alternator
102211-8070	A4021	Alternator
102211-8071	A4021	Alternator
102211-8080	A4021	Alternator
102211-8081	A4021	Alternator
102211-8200	A6013	Alternator
102211-8230	A4058	Alternator
102211-8260	A4073	Alternator
102211-8280	A4072	Alternator
102211-8310	A4072	Alternator
102211-8410	A3032	Alternator
102211-8430	A4058	Alternator
102211-8431	A4058	Alternator
102211-8440	A4058	Alternator
102211-8450	A4058	Alternator
102211-8470	A4058	Alternator
102211-8570	A3032	Alternator
102211-8571	A3032	Alternator
102211-8610	A3078	Alternator
102211-8640	A4042	Alternator
102211-8641	A4042	Alternator
102211-8650	A4073	Alternator
102211-8651	A4073	Alternator
102211-8660	A4048	Alternator
102211-8661	A4048	Alternator
102211-8730	A4085	Alternator
102211-8731	A4085	Alternator
102211-8740	A4084	Alternator
102211-8741	A4084	Alternator
102211-9070	A6033	Alternator
102211-9100	A6033	Alternator
104210-2710	A6018	Alternator
104210-2730	A6026	Alternator
104210-3050	A6027	Alternator
104210-3051	A6027	Alternator
104210-3052	A6027	Alternator
104210-3060	A6027	Alternator
104210-3170	A3074	Alternator
104210-3240	A3074	Alternator
104210-3250	A6027	Alternator
104210-3251	A6027	Alternator
104210-3431	A6007	Alternator
104210-3511	A6010	Alternator
104210-3512	A6010	Alternator
104210-3513	A6010	Alternator
104210-3520	A6018	Alternator
104210-3521	A6018	Alternator
104210-3522	A6018	Alternator
104210-3523	A6018	Alternator
104210-3530	A6019	Alternator
104210-3531	A6019	Alternator
104210-3532	A6019	Alternator
104210-3630	A6026	Alternator
104210-3640	A6026	Alternator
104210-3641	A6026	Alternator
104210-3730	A6023	Alternator
104210-3731	A6023	Alternator
104210-3732	A6023	Alternator
104210-3740	A6023	Alternator
104210-3741	A6023	Alternator
104210-3760	A6011	Alternator
104210-3761	A6011	Alternator
104210-3762	A6011	Alternator
104210-3780	A0224	Alternator
104210-3980	A6027	Alternator
104210-4101	A6038	Alternator
104210-4102	A6038	Alternator
104210-4270	A3074	Alternator
104210-5150	A6038	Alternator
104210-5470	A6008	Alternator
104210-5790	A6011	Alternator
104210-5800	A6019	Alternator
104210-8020	A6025	Alternator
104210-8021	A6025	Alternator
104210-9010	A6025	Alternator
104210-9011	A6025	Alternator
121000-4250	A0182	Alternator
121041-0580	AFP6002	FW pulley
121041-1140	AFP6013	FW pulley
121041-1450	AFP6008	FW pulley
12600-2320	ARE6044	Regulator
126000-0060	ARE6028	Regulator
126000-0180	ARE6003	Regulator
126000-0330	ARE6001	Regulator
126000-0340	ARE6001	Regulator
126000-0344	ARE6005	Regulator
126000-0371	ARE6007	Regulator
126000-0380	ARE6046	Regulator
126000-0400	ARE6001	Regulator
126000-0430	ARE6004	Regulator
126000-0440	ARE6018	Regulator
126000-0510	ARE6001	Regulator
126000-0520	ARE6003	Regulator
126000-0540	ARE6006	Regulator
126000-0550	ARE6008	Regulator
126000-0570	ARE6005	Regulator
126000-0580	ARE6007	Regulator
126000-0600	ARE6028	Regulator
126000-0610	ARE6012	Regulator
126000-0650	ARE6001	Regulator
126000-0700	ARE6001	Regulator
126000-0720	ARE6019	Regulator
126000-0721	ARE6009	Regulator
126000-0731	ARE6001	Regulator
126000-0732	ARE6001	Regulator
126000-0770	ARE6003	Regulator
126000-0820	ARE6003	Regulator
126000-0850	ARE6009	Regulator
126000-0880	ARE6009	Regulator
126000-0900	ARE6008	Regulator
126000-0901	ARE6008	Regulator
126000-0920	ARE6017	Regulator
126000-0931	ARE6001	Regulator
126000-0932	ARE6001	Regulator
126000-0940	ARE6011	Regulator
126000-0980	ARE6008	Regulator
126000-1030	ARE6011	Regulator
126000-1060	ARE6006	Regulator
126000-1110	ARE6012	Regulator
126000-1160	ARE6028	Regulator
126000-1170	ARE6006	Regulator
126000-1190	ARE6001	Regulator
126000-1200	ARE6004	Regulator
126000-1300	ARE6011	Regulator
126000-1310	ARE6018	Regulator
126000-1330	ARE6019	Regulator
126000-1350	ARE6005	Regulator
126000-1370	ARE6009	Regulator
126000-1400	ARE6001	Regulator
126000-1410	ARE6011	Regulator
126000-1421	ARE6017	Regulator
126000-1440	ARE6012	Regulator
126000-1441	ARE6012	Regulator
126000-1450	ARE6001	Regulator
126000-1460	ARE6017	Regulator
126000-1470	ARE6023	Regulator
126000-1471	ARE6023	Regulator
126000-1500	ARE6012	Regulator
126000-1530	ARE6001	Regulator
126000-1540	ARE6002	Regulator
126000-1550	ARE6008	Regulator
126000-1560	ARE6001	Regulator
126000-1570	ARE6008	Regulator
126000-1580	ARE6002	Regulator
126000-1630	ARE6031	Regulator
126000-1640	ARE6002	Regulator
126000-1660	ARE6002	Regulator
126000-1670	ARE6002	Regulator
126000-1700	ARE6011	Regulator
126000-1720	ARE6011	Regulator
126000-1730	ARE6013	Regulator
126000-1750	ARE6013	Regulator
126000-1770	ARE6035	Regulator
126000-1800	ARE6030	Regulator
126000-1810	ARE6014	Regulator
126000-1850	ARE6014	Regulator
126000-1860	ARE6011	Regulator
126000-1870	ARE6014	Regulator
126000-1880	ARE6011	Regulator
126000-1930	ARE6013	Regulator
126000-1940	ARE6032	Regulator
126000-1960	ARE6033	Regulator
126000-2000	ARE6014	Regulator
126000-2050	ARE6033	Regulator
126000-2090	ARE6015	Regulator
126000-2140	ARE6030	Regulator
126000-2160	ARE6015	Regulator
126000-2170	ARE6015	Regulator
126000-2190	ARE6027	Regulator
126000-2200	ARE6033	Regulator
126000-2250	ARE6033	Regulator
126000-2260	ARE6014	Regulator
126000-2290	ARE6025	Regulator
126000-2340	ARE6021	Regulator
126000-2350	ARE6010	Regulator
126000-2450	ARE6027	Regulator
126000-2470	ARE6015	Regulator
126000-2490	ARE6041	Regulator
126000-2610	ARE6015	Regulator
126000-2730	ARE6028	Regulator
126000-2861	ARE6036	Regulator

DENSO	AS	PRODUCT
126000-3040	ARE6036	Regulator
126000-3130	ARE6034	Regulator
126000-3131	ARE6034	Regulator
126000-3170	ARE6034	Regulator
126000-3171	ARE6034	Regulator
126000-7010	ARE6021	Regulator
126000-7011	ARE6021	Regulator
126000-7040	ARE6010	Regulator
126000-7090	ARE6001	Regulator
126000-7100	ARE6002	Regulator
126000-7110	ARE6002	Regulator
126600-0040	ARE6048	Regulator
126600-0041	ARE6048	Regulator
126600-0042	ARE6048	Regulator
126600-0140	ARE6047	Regulator
126600-3010	ARE6039	Regulator
126600-3040	ARE6039	Regulator
126600-3350	ARE6047	Regulator
126600-3390	ARE6039	Regulator
126600-3430	ARE6038	Regulator
126600-3640	ARE6038	Regulator
126600-3660	ARE6049	Regulator
128000-0040	S6002	Starter
128000-0220	S6013	Starter
128000-0360	S6001	Starter
128000-0461	S5002	Starter
128000-0462	S5002	Starter
128000-0830	S6022	Starter
128000-0960	S6004	Starter
128000-1230	S5023	Starter
128000-1240	S6009	Starter
128000-1241	S6009	Starter
128000-1520	S6013	Starter
128000-1930	S6018	Starter
128000-1950	S6018	Starter
128000-2670	S0247	Starter
128000-2680	S6020	Starter
128000-2682	S6020	Starter
128000-2790	S0247	Starter
128000-3340	S6013	Starter
128000-3740	S0247	Starter
128000-3741	S0247	Starter
128000-4060	S6018	Starter
128000-4230	S0247	Starter
128000-425	S6030	Starter
128000-4480	S6020	Starter
128000-4660	S6004	Starter
128000-4661	S6004	Starter
128000-5680	S6020	Starter
128000-5681	S6020	Starter
128000-5682	S6020	Starter
128000-5730	S6025	Starter
128000-5731	S6025	Starter
128000-5732	S6025	Starter
128000-6420	S6020	Starter
128000-6421	S6020	Starter
128000-6422	S6020	Starter
128000-7090	S6013	Starter
128000-7190	S5018	Starter
128000-7191	S5018	Starter
128000-7200	S5023	Starter
128000-7350	S6001	Starter
128000-7352	S6001	Starter
128000-7353	S6001	Starter
128000-7600	S0107	Starter
128000-7601	S0107	Starter
128000-7602	S0107	Starter
128000-7603	S0107	Starter
128000-7604	S0107	Starter
128000-7680	S6019	Starter
128000-8142	S6001	Starter
128000-8240	S6009	Starter
128000-8241	S6009	Starter
128000-8310	S5018	Starter
128000-8311	S5018	Starter
128000-8312	S5018	Starter
128000-8620	S6026	Starter
128000-8621	S6026	Starter
128000-8650	S0247	Starter
128000-8690	S0247	Starter
128000-8990	S0247	Starter
128000-9590	S6001	Starter
128000-9591	S6001	Starter
128000-9592	S6001	Starter
128099-5160	SD6021	Drive
128800-3140	SS0022	Starter solenoid
153400-0850	SS6009	Starter solenoid
153400-0860	SS6003	Starter solenoid
182800-3140	SS0022	Starter solenoid
228000-0400	S6001	Starter
228000-0640	S6001	Starter
228000-0900	S6014	Starter
228000-0901	S6014	Starter
228000-0902	S6014	Starter
228000-1120	S6031	Starter
228000-1121	S6031	Starter
228000-1122	S6031	Starter
228000-1540	S0247	Starter
228000-1600	S6026	Starter
228000-1601	S6026	Starter
228000-2610	S6019	Starter
228000-2611	S6019	Starter
228000-2682	S6001	Starter
228000-2940	S6014	Starter
228000-2960	S6014	Starter
228000-3380	S5014	Starter
228000-3381	S5014	Starter
228000-3840	S6002	Starter
228000-3841	S6002	Starter
228000-3842	S6002	Starter
228000-3850	S6004	Starter
228000-3851	S6004	Starter
228000-3852	S6004	Starter
228000-4293	S6004	Starter
228000-5020	S6011	Starter
228000-5021	S6011	Starter
228000-5022	S6011	Starter
228000-5023	S6011	Starter
228000-5340	S6021	Starter
228000-5341	S6021	Starter
228000-5342	S6021	Starter
228000-5382	S6004	Starter
228000-5640	S6023	Starter
228000-5641	S6023	Starter
228000-7130	S5018	Starter
228000-7220	S6007	Starter
228000-7550	S6005	Starter
228000-7591	S0168	Starter
228000-7751	S6010	Starter
228000-7800	S6012	Starter
228000-7801	S6012	Starter
228000-9901	S6029	Starter
228000-9902	S6029	Starter
27160-77090	SA6002	Starter armature
28150-87512	SS6007	Starter solenoid
297008291	IC9001	Ignition Coil
312205-2A20	SS6009	Starter solenoid
421000-0081	A6039	Alternator
421000-0082	A6039	Alternator
421000-0083	A6039	Alternator
421000-0084	A6039	Alternator
421000-0085	A6039	Alternator
421000-0086	A6039	Alternator
428000-0260	S6011	Starter
428000-0290	S6021	Starter
428000-0500	S6032	Starter
428000-0570	S6028	Starter
428000-0660	S0093	Starter
428000-0670	S0073	Starter
428000-0700	S6029	Starter
428000-0720	S0020	Starter
428000-1280	S6032	Starter
428000-1290	S4030	Starter
428000-1380	S4029	Starter
428000-1620	S3027	Starter
428000-1640	S3016	Starter
428000-1750	S0244	Starter
428000-1760	S0242	Starter
428000-2730	S6032	Starter
428000-3110	S6021	Starter
428000-4600	S0218	Starter
428000-7820	S6032	Starter
949100-0080	ABE9004	Bearing
949100-0150	ABE9002	Bearing
949100-0160	ABE9003	Bearing
949100-0170	ABE9004	Bearing
949100-0340	ABE9003	Bearing
949100-0350	ABE9002	Bearing
949100-0390	ABE9005	Bearing
949100-0650	ABE9005	Bearing
949100-0930	ABE9040(NSK)	Bearing
949100-0931	ABE9040(NSK)	Bearing
949100-1000	ABE9002	Bearing
949100-1170	ABE9040(NSK)	Bearing
949100-1420	ABE9002	Bearing
949100-1650	ABE9035	Bearing
949100-1750	ABE9001	Bearing
949100-1760	ABE9035	Bearing
949100-1820	ABE9004	Bearing
949100-1860	ABE9020	Bearing
949100-1900	ABE9004	Bearing
949100-1930	ABE9021	Bearing
949100-1980	ABE9002	Bearing
949100-2030	ABE9004	Bearing
949100-2090	ABE9004	Bearing
949100-2160	ABE9001	Bearing

DENSO	AS	PRODUCT
949100-2210	ABE9021	Bearing
949100-2500	ABE9010	Bearing
949100-2590	ABE9035	Bearing
949100-2700	ABE9040(NSK)	Bearing
949100-2701	ABE9040(NSK)	Bearing
949100-2740	ABE9020	Bearing
949100-2760	ABE9019	Bearing
949100-2790	ABE9016	Bearing
949100-2800	ABE9005	Bearing
949100-2820	ABE9006	Bearing
949100-2940	ABE9020	Bearing
949100-2950	ABE9003	Bearing
949100-2951	ABE9003	Bearing
949100-3160	ABE9003	Bearing
949100-3161	ABE9003	Bearing
949100-3170	ABE9036	Bearing
949100-3190	ABE9023	Bearing
949100-3230	ABE9036	Bearing
949100-3240	ABE9003	Bearing
949100-3290	ABE9023	Bearing
949100-3330	ABE9024	Bearing
949100-3360	ABE9017	Bearing
949100-3361	ABE9017	Bearing
949100-3450	ABE9017	Bearing
949100-3460	ABE9004	Bearing
949100-3461	ABE9017	Bearing
949100-3462	ABE9017	Bearing
949100-3480	ABE9031	Bearing
949100-3481	ABE9031	Bearing
949100-3540	ABE9001	Bearing
949100-3630	ABE9003	Bearing
949100-3650	ABE9036	Bearing
949100-3660	ABE9036	Bearing
949100-3670	ABE9020	Bearing
949100-3730	ABE9003	Bearing
949100-3731	ABE9003	Bearing
949100-3820	ABE9026	Bearing
949100-3821	ABE9026	Bearing
949100-3920	ABE9020	Bearing
949100-3980	ABE9016	Bearing
949100-4110	ABE9035	Bearing
949100-4120	ABE9010	Bearing
949100-4130	ABE9020	Bearing
949100-4230	ABE9035	Bearing
949100-4370	ABE9024	Bearing
949100-4440	ABE9016	Bearing
949100-4620	ABE9017	Bearing
949100-5010	ABE9024	Bearing
949100-5220	ABE9020	Bearing
949100-5230	ABE9010	Bearing
949100-5240	ABE9020	Bearing
949100-5250	ABE9020	Bearing
949100-5280	ABE9035	Bearing
949100-5750	ABE9026	Bearing
949100-5820	ABE9010	Bearing
949100-5940	ABE9005	Bearing
949100-6070	ABE9010	Bearing
949100-6080	ABE9010	Bearing
949100-6090	ABE9005	Bearing
949100-6750	ABE9024	Bearing
MS428000-1750	S0244	Starter
MS428000-1760	S0242	Starter

DENSO	AS	PRODUCT
N810F01288	ARE6037	Regulator
PCM-01	ARE6040	Regulator
ST17001	ARE6037	Regulator
for 104210-3732	ARC6022	Rectifier
for JA1800IR	ABR6002	Bracket w/stator
DESCRIPTION 1/2	**AS**	**PRODUCT**
	AP0009	Pulley
DESCRIPTION 1/8	**AS**	**PRODUCT**
	AP0010	Pulley
DEUTZ	**AS**	**PRODUCT**
1178026	S9044	Starter
1178686	S9044	Starter
1306533	ARC0061	Rectifier
9941262	ARC0061	Rectifier
DUBOIS	**AS**	**PRODUCT**
5003	ARD9043	Diode
5004	ARD9044	Diode
DUCELLIER	**AS**	**PRODUCT**
11520	S0197	Starter
511006	ARE3018	Regulator
511008	ARE3018	Regulator
511010	ARE3018	Regulator
516016	A3046	Alternator
516017	A3045	Alternator
516024	A3045	Alternator
516032	A4081	Alternator
516038	A3048	Alternator
516055	A0069	Alternator
534029	S3015	Starter
534031	S3015	Starter
534032	S3014	Starter
534039	S0004	Starter
534042	S3015	Starter
534043	S3015	Starter
534047	S3014	Starter
534053	S4039	Starter
534054	S3005	Starter
534055	S3005	Starter
534057	S3015	Starter
538501	S4004	Starter
538502	S9021	Starter
581255	ARE3018	Regulator
581256	ARE3018	Regulator
584185	SD3013	Drive
590613	ABE9002	Bearing
592967	ARE4003	Regulator
593054	ARC4008	Rectifier
593080	ARC3006	Rectifier
593083	ARC3019	Rectifier
593084	ARC3001	Rectifier
593087	ARC3010	Rectifier
6127	S4018	Starter
6180	S4002	Starter
6232	S4018	Starter
6233	S4002	Starter
650260	SD1004	Drive
672541	SBU9037	Bushing
68430	SBU9014	Bushing
68902	SBU9014	Bushing
68903	SBU9014	Bushing

DUCELLIER	AS	PRODUCT
690012	ARE3018	Regulator
690587	ARE3018	Regulator
690645	ARE3018	Regulator
690686	ARE3018	Regulator
691097	ARE3018	Regulator
691253	ARE3018	Regulator
691292	ARE3018	Regulator
691428	ARE3018	Regulator
8293	S0004	Starter
8294	S0004	Starter
84909	SBU9014	Bushing
EFEL	**AS**	**PRODUCT**
00460	SRS0014	Repair set
00461	SRS0014	Repair set
01360	SRS0014	Repair set
01361	SRS0014	Repair set
02201	S0002	Starter
03285	S0151	Starter
04143	SRS0014	Repair set
04197	SRS0014	Repair set
04667	S0151	Starter
06190	SD0104	Drive
06702	SBR0005	Starter bracket
06860	S0008	Starter
09351	SRS0014	Repair set
10420	S0067	Starter
10430	S9044	Starter
10440	S0002	Starter
10460	S0002	Starter
10590	A0012	Alternator
10655	S0003	Starter
10890	A4029	Alternator
10910	A4039	Alternator
11360	S0067	Starter
11370	S9055	Starter
11420	S0110	Starter
11430	S0092	Starter
11580	S0002	Starter
11586	SBH0002	S. Brush holder
11640	S9044	Starter
11750	S0114	Starter
11850	SBH0001	S. Brush holder
11930	S9055	Starter
12070	S4036(MM)R	Starter
12080	S4021	Starter
12310	SS0024	Starter solenoid
12320	SS0008	Starter solenoid
12490	SS0009	Starter solenoid
12590	S0063	Starter
12690	SS9006	Starter solenoid
12700	SS9005	Starter solenoid
12950	S0216	Starter
13090	S0002	Starter
13140	S0041	Starter
13460	A4059	Alternator
13470	A4065	Alternator
13850	A4065	Alternator
13870	A4030	Alternator
14100	S9044	Starter
14650	S0110	Starter
14660	S4037(MM)R	Starter
14860	S0111	Starter

EFEL	AS	PRODUCT
14965	A0031	Alternator
22201	S0151	Starter
22602	S0001	Starter
22604	S0063	Starter
22606	S0216	Starter
22608	S0221(BOSCH)R	Starter
22622	S0216	Starter
22626	S0151	Starter
22701	S0003	Starter
22715	S0022	Starter
22718	S0065	Starter
72006	SRS0014	Repair set
85222	ABE9009	Bearing
ELDOR	**AS**	**PRODUCT**
78419001	IC9001	Ignition Coil
ELEKTROBAT	**AS**	**PRODUCT**
2-3102-KO	S1014	Starter
ELMOT	**AS**	**PRODUCT**
001.120.0	SF0005	Starter field coil
001.300.0	SA0001	Starter armature
009.300.0	SA0010	Starter armature
015.000.0	S0061	Starter
017.000.0	S9065	Starter
043.000.0	S0012	Starter
274020.0	A4063	Alternator
3160200	A4051	Alternator
605.300.0	SA0009	Starter armature
609.000.0	S0068	Starter
611.000.0	S0007	Starter
621.000.0	S0011	Starter
8050018000	SS9018	Starter solenoid
806.004.000.0	S9021	Starter
8060014040	BSX96	Sta. Brush set
806003000.0	S9050	Starter
806004000.0	S9048	Starter
806008000.0	S9050	Starter
806012000.0	S9044	Starter
8084316	SBU9037	Bushing
809.700.2	SD4018	Drive
851.300.0	SA9006	Starter armature
851402.1	SBU9034	Bushing
851502.0	SBU9034	Bushing
851726.0	SBU9034	Bushing
851734.0	SBU9034	Bushing
851992.0	SBU9034	Bushing
854.300.0	SA9007	Starter armature
856000.0	S9050	Starter
863.000.4	S9021	Starter
863.000.5	S9021	Starter
863000.1	S9050	Starter
863000.4	S9048	Starter
867000.0	S9044	Starter
871.500.1	SBR0003	Starter bracket
871.700.1	SD0104	Drive
875.703.0	SD0005	Drive
876.500.1	SBR0005	Starter bracket
876.703.0	SD0006	Drive
889.500.0	SBR0004	Starter bracket
9039020	ABH4002	A. Brush holder
906.011.000.0	S9021	Starter
9610010	SS9018	Starter solenoid
9610100	SS9018	Starter solenoid

ELMOT	AS	PRODUCT
962001	SS9017	Starter solenoid
9620010	SS9017	Starter solenoid
987.703.0	SD0015	Drive
A115-34A	A9014	Alternator
A125-45C	A4063	Alternator
A125-55G	A4063	Alternator
A125-55T	A4047	Alternator
A125-55e	A4047	Alternator
AA125R	A4051	Alternator
E100L-1.5/12	S0128	Starter
R10	SA9006	Starter armature
R10 , R11	SD9018	Drive
R10-08	S0068	Starter
R10.01	S9066	Starter
R100.03	S0128	Starter
R10A	S9066	Starter
R10C	S9064	Starter
R11	SA9007	Starter armature
R11-04	S9021	Starter
R11.03	S9050	Starter
R11.04	S9048	Starter
R11.08	S9050	Starter
R11.12	S9044	Starter
R11A	S9056	Starter
R11C	S9050	Starter
R11G	S9048	Starter
R11GA	S9050	Starter
R11K	S0115	Starter
R11a	S9024	Starter
R11g	S9021	Starter
R20-42	S0003	Starter
R20.24	S0008	Starter
R20A	S9065	Starter
R20e	S0011	Starter
R22-15	S0061	Starter
R22-17	S9065	Starter
R22-43	S0012	Starter
R22.04	S0060	Starter
R22.05	S0003	Starter
R22.13	S0010	Starter
R23-08	S0001	Starter
R23-11	S0007	Starter
R23-21	S0011	Starter
R23.10	S0063	Starter
R23.18	S0216	Starter
R80.04	S4039	Starter
R80C	S4033	Starter
R80C1	S4033	Starter
R80K	S4039	Starter
WE-10A	SS9018	Starter solenoid
WE-11A	SS9017	Starter solenoid
for R10	SAC9001	Starter commutator
for R11	SS9017	Starter solenoid
for SA9006	SAC9001	Starter commutator
ELSTOCK	**AS**	**PRODUCT**
25-0015	S4012	Starter
25-0037	S0115	Starter
25-0040	S4018	Starter
25-0041	S4005	Starter
25-0048	S4033	Starter
25-0060	S4004	Starter

ELSTOCK	AS	PRODUCT
25-0064	S4004	Starter
25-0070	S4006	Starter
25-0073	S0219(BOSCH)R	Starter
25-0079	S0128	Starter
25-0080	S0042	Starter
25-0134	S0046	Starter
25-0142	S4014	Starter
25-0155	S0115	Starter
25-0157	S0115	Starter
25-0189	S0067	Starter
25-0201	S4013	Starter
25-0208	S9046	Starter
25-0226	S0116	Starter
25-0227	S0117	Starter
25-0232	S9046	Starter
25-0274	S4036(MM)R	Starter
25-0275	S0113	Starter
25-0280	S4007	Starter
25-0282	S9044	Starter
25-0287	S0114	Starter
25-0298	S5002	Starter
25-0308	S9057	Starter
25-0314	S1013	Starter
25-0315	S4010	Starter
25-0319	S3014	Starter
25-0328	S5012	Starter
25-0334	S4011	Starter
25-0337	S9043	Starter
25-0340	S4037(MM)R	Starter
25-0343	S4004	Starter
25-0355	S4002	Starter
25-0370	S1013	Starter
25-0373	S0198	Starter
25-0376	S0004	Starter
25-0385	S0077	Starter
25-0395	S5014	Starter
25-0407	S0084	Starter
25-0408	S0043	Starter
25-0411	S0183	Starter
25-0413	S9043	Starter
25-0416	S5023	Starter
25-0430	S9024	Starter
25-0432	S0112	Starter
25-0434	S5005	Starter
25-0436	S5005	Starter
25-0446	S6002	Starter
25-0453	S3015	Starter
25-0457	S0077	Starter
25-0465	S0152	Starter
25-0466	S5005	Starter
25-0467	S5024	Starter
25-0472	S0110	Starter
25-0480	S5025	Starter
25-0482	S0016	Starter
25-0489	S0047	Starter
25-0497	S6002	Starter
25-0498	S2015	Starter
25-1003	S4001	Starter
25-1006	S4039	Starter
25-1008	S0217	Starter
25-1011	S4008	Starter
25-1013	S0045	Starter

ELSTOCK	AS	PRODUCT
25-1022	S9021	Starter
25-1026	S0069	Starter
25-1028	S3005	Starter
25-1030	S4019	Starter
25-1034	S5010	Starter
25-1039	S0043	Starter
25-1045	S6013	Starter
25-1046	S9008	Starter
25-1050	S6004	Starter
25-1065	S0236	Starter
25-1073	S4018	Starter
25-1074	S2005	Starter
25-1075	S0165	Starter
25-1077	S0127	Starter
25-1080	S0204	Starter
25-1082	S0050	Starter
25-1106	S6004	Starter
25-1114	S5012	Starter
25-1118	S9046	Starter
25-1137	S3014	Starter
25-1147	S0148	Starter
25-1148	S3009	Starter
25-1165	S2007	Starter
25-1178	S9043	Starter
25-1182	S0187	Starter
25-1195	S0132	Starter
25-1198	S3009	Starter
25-1199	S3031	Starter
25-1214	S0247	Starter
25-1216	S0133	Starter
25-1225	S3045	Starter
25-1230	S5040	Starter
25-1240	S0031	Starter
25-1246	S5017	Starter
25-1250	S2006	Starter
25-1252	S0029	Starter
25-1253	S6009	Starter
25-1254	S3005	Starter
25-1261	S5016	Starter
25-1264	S0144	Starter
25-1265	S5020	Starter
25-1278	S1013	Starter
25-1281	S3004	Starter
25-1282	S0056	Starter
25-1283	S5019	Starter
25-1295	S0030	Starter
25-1307	S0161	Starter
25-1308	S6022	Starter
25-1312	S0131	Starter
25-1315	S5020	Starter
25-1324	S0033	Starter
25-1332	S0205	Starter
25-1334	S0247	Starter
25-1335	S2017	Starter
25-1338	S3050	Starter
25-1343	S5006	Starter
25-1355	S0062	Starter
25-1356	S0238	Starter
25-1360	S0187	Starter
25-1361	S0142	Starter
25-1365	S0039	Starter
25-1377	S0146	Starter
25-1398	S5018	Starter
25-1400	S4011	Starter
25-1405	S5017	Starter
25-1410	S9021	Starter
25-1416	S4001	Starter
25-1420	S3042	Starter
25-1425	S2002	Starter
25-1427	S5023	Starter
25-1432	S6001	Starter
25-1434	S0054	Starter
25-1436	S6003	Starter
25-1441	S0014	Starter
25-1448	S9010	Starter
25-1459	S1012	Starter
25-1460	S2016	Starter
25-1472	S0111	Starter
25-1478	S2010	Starter
25-1479	S0126	Starter
25-1480	S4022	Starter
25-1483	S1003	Starter
25-1484	S2011	Starter
25-1485	S0209	Starter
25-1487	S0114	Starter
25-1490	S0183	Starter
25-155	S9044	Starter
25-1558	A0094	Alternator
25-2000	S6013	Starter
25-2005	S5046	Starter
25-2009	S5012	Starter
25-2010	S0124	Starter
25-2011	S0064	Starter
25-2012	S0158	Starter
25-2017	S3002	Starter
25-2019	S0051	Starter
25-2021	S0025	Starter
25-2022	S3054	Starter
25-2026	S3013	Starter
25-2031	S3002	Starter
25-2032	S0166	Starter
25-2037	S0059	Starter
25-2041	S0204	Starter
25-2042	S5015	Starter
25-2045	S3001	Starter
25-2049	S0104	Starter
25-2050	S0096	Starter
25-2051	S4020	Starter
25-2052	S3052	Starter
25-2056	S5037	Starter
25-2057	S5012	Starter
25-2070	S2017	Starter
25-2072	S0143	Starter
25-2079	S0098	Starter
25-2080	S0017	Starter
25-2081	S4015	Starter
25-2082	S0239	Starter
25-2097	S2004	Starter
25-2098	S0087	Starter
25-2100	S0058	Starter
25-2101	S4016	Starter
25-2102	S0034	Starter
25-2103	S0106	Starter
25-2106	S0094	Starter
25-2110	S0174	Starter
25-2111	S0036	Starter
25-2112	S0026	Starter
25-2122	S5007	Starter
25-2124	S0211	Starter
25-2125	S1008	Starter
25-2128	S1014	Starter
25-2131	S0103	Starter
25-2136	S5018	Starter
25-2138	S0144	Starter
25-2140	S5021	Starter
25-2142	S3053	Starter
25-2148	S0241	Starter
25-2149	S5023	Starter
25-2153	S2009	Starter
25-2165	S0057	Starter
25-2166	S0105	Starter
25-2167	S0005	Starter
25-2185	S0018	Starter
25-2187	S9001	Starter
25-2190	S2002	Starter
25-2191	S3007	Starter
25-2192	S2015	Starter
25-2195	S3030	Starter
25-2202	S6019	Starter
25-2204	S0125	Starter
25-2207	S9031	Starter
25-2216	S2018	Starter
25-2220	S0157	Starter
25-2221	S3011	Starter
25-2222	S0126	Starter
25-2224	S4034	Starter
25-2225	S0027	Starter
25-2228	S9021	Starter
25-2230	S0034	Starter
25-2231	S0006	Starter
25-2232	S4017	Starter
25-2243	S0048	Starter
25-2246	S0093	Starter
25-2247	S3022	Starter
25-2248	S1014	Starter
25-2253	S0190R	Starter
25-2257	S4033	Starter
25-2258	S6020	Starter
25-2263	S0028	Starter
25-2264	S0098	Starter
25-2270	S0049	Starter
25-2284	S1002	Starter
25-2288	S1005	Starter
25-2305	S9015	Starter
25-2311	S6011	Starter
25-2318	S1004	Starter
25-2321	S0066	Starter
25-2324	S0004	Starter
25-2336	S6016	Starter
25-2337	S4027	Starter
25-2339	S3040	Starter
25-2348	S9009	Starter
25-2349	S5026	Starter
25-2354	S3020	Starter
25-2363	S0176	Starter
25-2370	S5009	Starter

ELSTOCK	AS	PRODUCT
25-2372	S3063	Starter
25-2374	S0240	Starter
25-2376	S0248	Starter
25-2382	S0088	Starter
25-2387	S3008	Starter
25-2389	S3056	Starter
25-2394	S5033	Starter
25-2396	S0146	Starter
25-2402	S4019	Starter
25-2404	S0168	Starter
25-2406	S5004	Starter
25-2411	S0099	Starter
25-2413	S6019	Starter
25-2417	S4035	Starter
25-2419	S4022	Starter
25-2426	S2001	Starter
25-2427	S9056	Starter
25-2439	S5043	Starter
25-2447	S6021	Starter
25-2450	S0091	Starter
25-2456	S5016	Starter
25-2462	S6016	Starter
25-2463	S9002	Starter
25-2466	S9004	Starter
25-2471	S0141	Starter
25-2472	S0168	Starter
25-2474	S0224	Starter
25-2477	S0020	Starter
25-2485	S0032	Starter
25-2487	S0095	Starter
25-2489	S6007	Starter
25-2491	S9035	Starter
25-2492	S0169	Starter
25-2493	S0225	Starter
25-2496	S5021	Starter
25-2499	S6016	Starter
25-2504	S0168	Starter
25-2589	A0048	Alternator
25-3002	S0195	Starter
25-3006	S5007	Starter
25-3009	S3019	Starter
25-3010	S3024	Starter
25-3011	S0103	Starter
25-3015	S9003	Starter
25-3024	S0192	Starter
25-3025	S5002	Starter
25-3030	S0206	Starter
25-3031	S0098	Starter
25-3033	S1008	Starter
25-3034	S0223(BOSCH)	Starter
25-3042	S3021	Starter
25-3045	S6012	Starter
25-3046	S0136	Starter
25-3054	S3052	Starter
25-3055	S4022	Starter
25-3059	S0081	Starter
25-3061	S3036	Starter
25-3063	S0212	Starter
25-3065	S3008	Starter
25-3068	S6024	Starter
25-3069	S2019	Starter
25-3070	S3016	Starter
25-3073	S3058R	Starter
25-3078	S1010	Starter
25-3082	S4028	Starter
25-3083	S3032	Starter
25-3084	S3002	Starter
25-3085	S0188	Starter
25-3086	S0017	Starter
25-3087	S1014	Starter
25-3096	S4028	Starter
25-3100	S3024	Starter
25-3102	S0087	Starter
25-3104	S3060	Starter
25-3106	S0089	Starter
25-3107	S5038	Starter
25-3113	S3052	Starter
25-3115	S3001	Starter
25-3117	S0042	Starter
25-3123	S0129	Starter
25-3125	S0234	Starter
25-3129	S0119	Starter
25-3135	S0059	Starter
25-3149	S0154	Starter
25-3150	S6008	Starter
25-3155	S9032	Starter
25-3161	S0225	Starter
25-3164	S3051	Starter
25-3165	S0102	Starter
25-3168	S0155	Starter
25-3172	S5044	Starter
25-3175	S0246	Starter
25-3180	S1010	Starter
25-3181	S0163	Starter
25-3183	S9011	Starter
25-3191	S3051	Starter
25-3192	S2010	Starter
25-3212	S0186R	Starter
25-3213	S5032	Starter
25-3219	S0090	Starter
25-3220	S0243	Starter
25-3221	S3044	Starter
25-3222	S3055	Starter
25-3233	S5002	Starter
25-3244	S5026	Starter
25-3248	S0231	Starter
25-3250	S0185	Starter
25-3251	S0227	Starter
25-3252	S3059	Starter
25-3255	S0203	Starter
25-3256	S0214	Starter
25-3258	S0088	Starter
25-3263	S0035	Starter
25-3265	S0153	Starter
25-3267	S3062	Starter
25-3269	S5045	Starter
25-3270	S5036	Starter
25-3271	S5050	Starter
25-3273	S9020	Starter
25-3279	S5012	Starter
25-3280	S0226	Starter
25-3283	S4025	Starter
25-3286	S3064	Starter
25-3289	S3039	Starter
25-3290	S3029	Starter
25-3294	S3043	Starter
25-3296	S3029	Starter
25-3297	S3028	Starter
25-3303	S4016	Starter
25-3310	S0124	Starter
25-3320	S0152	Starter
25-3324	S0101	Starter
25-3330	S5035	Starter
25-3334	S0156	Starter
25-3338	S6028	Starter
25-3340	S5031	Starter
25-3342	S0100	Starter
25-3344	S9025	Starter
25-3345	S9033	Starter
25-3347	S5042	Starter
25-3348	S3037	Starter
25-3355	S2012	Starter
25-3357	S0038	Starter
25-3360	S6031	Starter
25-3364	S6032	Starter
25-3365	S0177	Starter
25-3366	S0120	Starter
25-3368	S0171	Starter
25-3369	S0140	Starter
25-3377	S4029	Starter
25-3384	S0098	Starter
25-3388	S6021	Starter
25-3389	S5004	Starter
25-339	S9055	Starter
25-3390	S9036	Starter
25-3395	S0139	Starter
25-3396	S0228	Starter
25-3401	S0016	Starter
25-3402	S5056	Starter
25-3414	S0123	Starter
25-3423	S3017	Starter
25-3432	S6029	Starter
25-3434	S9033	Starter
25-3446	S3057	Starter
25-3454	S0186R	Starter
25-3460	S9030	Starter
25-3463	S9032	Starter
25-3466	S0121	Starter
25-3469	S0242	Starter
25-3470	S0244	Starter
25-3474	S0232	Starter
25-3475	S3062	Starter
25-3476	S3061	Starter
25-3482	S5053	Starter
25-3489	S9062	Starter
25-3490	S0159	Starter
25-3498	S0191	Starter
25-3499	S0193	Starter
25-4002	S0213	Starter
25-4007	S0175	Starter
25-4015	S0189	Starter
25-4049	S0218	Starter
25-4059	S9063	Starter
25-4074	S0237	Starter
25-4087	S0238	Starter
25-4103	S0215	Starter

ELSTOCK	AS	PRODUCT
25-472	S0110	Starter
26-0308	S9057	Starter
26-0314	S1013	Starter
26-0376	S0004	Starter
26-0395	S5012	Starter
26-1035	S0072	Starter
26-1126	S6018	Starter
26-1134	S0072	Starter
26-1175	S0052	Starter
26-1282	S0056	Starter
26-1290	S0044	Starter
26-1313	S0190R	Starter
26-1315	S5020	Starter
26-1323	S0083	Starter
26-1352	S0015	Starter
26-1434	S0054	Starter
26-1446	S0055	Starter
26-2104	S0233	Starter
26-2133	S1002	Starter
26-2165	S0057	Starter
26-2238	S0073	Starter
26-2302	S1002	Starter
26-2391	S1010	Starter
26-3000	S4031	Starter
26-3033	S1008	Starter
26-3376	S0073	Starter
26-395	S5012	Starter
27-0730	A0013	Alternator
27-3515	A4035	Alternator
27-3787	A4021	Alternator
27-3789	A4028	Alternator
27-3907	A4062	Alternator
27-3963	A9016	Alternator
27-4651	A0182	Alternator
27-4696	A9011	Alternator
27-4698	A9011	Alternator
27-4813	A5029	Alternator
27-4829	A3105	Alternator
27-4830	A9012	Alternator
27-4838	A9020	Alternator
27-4847	A5034	Alternator
27-4850	A9023	Alternator
27-4932	A6010	Alternator
27-4933	A6018	Alternator
27-4948	A6039	Alternator
27-4956	A6011	Alternator
27-4968	A9012	Alternator
27-5525	A6026	Alternator
27-5526	A6026	Alternator
27-5527	A4068	Alternator
27-5658	A6019	Alternator
28-0511	A4065	Alternator
28-0512	A0103	Alternator
28-0522	A2036	Alternator
28-0534	A3042	Alternator
28-0537	A0012	Alternator
28-0561	A0014	Alternator
28-0584	A0098	Alternator
28-0585	A3045	Alternator
28-0587	A0106	Alternator
28-0633	A0004	Alternator
28-0639	A3047	Alternator
28-0647	A0086	Alternator
28-0675	A0069	Alternator
28-0709	A3046	Alternator
28-0717	A4012	Alternator
28-0718	A4059	Alternator
28-0730	A0013	Alternator
28-0733	A4063	Alternator
28-0739	A0020	Alternator
28-0742	A0020	Alternator
28-0772	A0055	Alternator
28-0773	A4039	Alternator
28-0794	A4014	Alternator
28-0801	A3013	Alternator
28-0809	A4011	Alternator
28-0810	A0133	Alternator
28-0815	A3001	Alternator
28-0831	A2028	Alternator
28-0857	A2036	Alternator
28-0859	A0069	Alternator
28-0870	A0031	Alternator
28-0877	A4081	Alternator
28-0892	A3004	Alternator
28-0893	A2028	Alternator
28-0908	A2004	Alternator
28-0910	A3042	Alternator
28-0914	A3005	Alternator
28-0918	A5006	Alternator
28-0927	A0109	Alternator
28-0943	A0091	Alternator
28-0944	A0028	Alternator
28-0950	A0092	Alternator
28-0956	A0141	Alternator
28-0958	A0028	Alternator
28-0959	A3048	Alternator
28-0980	A3012	Alternator
28-0981	A4065	Alternator
28-0982	A4065	Alternator
28-0996	A4063	Alternator
28-0997	A0094	Alternator
28-1503	A6022R	Alternator
28-1510	A4039	Alternator
28-1514	A4009	Alternator
28-1516	A0110	Alternator
28-1529	A5028	Alternator
28-1541	A3046	Alternator
28-1546	A3006	Alternator
28-1558	A0093	Alternator
28-1561	A6017	Alternator
28-1570	A2012	Alternator
28-1573	A6020	Alternator
28-1583	A0104	Alternator
28-1589	A2020	Alternator
28-1605	A3045	Alternator
28-1607	A0015	Alternator
28-1613	A0093	Alternator
28-1616	A4065	Alternator
28-1628	A4041	Alternator
28-1631	A3007	Alternator
28-1633	A4044	Alternator
28-1641	A6021	Alternator
28-1646	A5013	Alternator
28-1650	A0115	Alternator
28-1657	A4065	Alternator
28-1660	A3049	Alternator
28-1662	A3020	Alternator
28-1669	A0107	Alternator
28-1671	A6017	Alternator
28-1675	A5028	Alternator
28-1686	A6017	Alternator
28-1701	A5018	Alternator
28-1703	A0134	Alternator
28-1704	A3011	Alternator
28-1708	A3008	Alternator
28-1709	A3014	Alternator
28-1713	A3026	Alternator
28-1717	A3046	Alternator
28-1721	A0212	Alternator
28-1723	A5027	Alternator
28-1724	A0084	Alternator
28-1731	A4015	Alternator
28-1732	A2014	Alternator
28-1743	A2004	Alternator
28-1746	A2024	Alternator
28-1747	A2009	Alternator
28-1764	A4030	Alternator
28-1766	A0179	Alternator
28-1768	A0202	Alternator
28-1772	A0070	Alternator
28-1775	A4065	Alternator
28-1778	A4065	Alternator
28-1783	A4033	Alternator
28-1784	A5014	Alternator
28-1792	A4067	Alternator
28-1795	A2004	Alternator
28-1803	A0105	Alternator
28-1808	A5012	Alternator
28-1812	A5011	Alternator
28-1814	A2027	Alternator
28-1816	A0111	Alternator
28-1820	A3057	Alternator
28-1821	A6012	Alternator
28-1824	A3002	Alternator
28-1828	A2031	Alternator
28-1829	A2015	Alternator
28-1832	A4047	Alternator
28-1833	A0078	Alternator
28-1837	A3009	Alternator
28-1862	A0106	Alternator
28-1864	A3016	Alternator
28-1871	A1001	Alternator
28-1872	A3025	Alternator
28-1879	A0152	Alternator
28-1896	A2005	Alternator
28-1901	A0020	Alternator
28-1906	A9015	Alternator
28-1913	A1010	Alternator
28-1917	A2031	Alternator
28-1918	A3026	Alternator
28-1920	A0006	Alternator
28-1924	A2026	Alternator
28-1926	A2034	Alternator
28-1929	A0077	Alternator
28-1934	A6024	Alternator
28-1943	A0111	Alternator

ELSTOCK	AS	PRODUCT
28-1944	A3064	Alternator
28-1951	A1008	Alternator
28-1956	A0114	Alternator
28-1962	A3039	Alternator
28-1964	A1007	Alternator
28-1969	A3057	Alternator
28-1970	A3015	Alternator
28-1973	A3021	Alternator
28-1974	A1012	Alternator
28-1977	A0116	Alternator
28-1983	A5026	Alternator
28-1991	A0094	Alternator
28-2504	A4003	Alternator
28-2509	A4008	Alternator
28-2514	A4001	Alternator
28-2519	A2033	Alternator
28-2534	A5036	Alternator
28-2538	A0114	Alternator
28-2540	A6009	Alternator
28-2549	A9010	Alternator
28-2550	A0005	Alternator
28-2553	A3046	Alternator
28-2554	A2002	Alternator
28-2557	A4013	Alternator
28-2567	A9003	Alternator
28-2574	A0018	Alternator
28-2578	A0112	Alternator
28-2584	A2004	Alternator
28-2585	A3062	Alternator
28-2587	A0118	Alternator
28-2588	A0129	Alternator
28-2589	A0048	Alternator
28-2591	A0079	Alternator
28-2592	A3096	Alternator
28-2594	A3029	Alternator
28-2597	A3040	Alternator
28-2600	A0131	Alternator
28-2601	A3075	Alternator
28-2615	A3050	Alternator
28-2619	A0096	Alternator
28-2621	A3019	Alternator
28-2622	A5008	Alternator
28-2624	A3010	Alternator
28-2630	A4004	Alternator
28-2631	A0197	Alternator
28-2633	A0131	Alternator
28-2637	A4031	Alternator
28-2648	A0089	Alternator
28-2650	A0051	Alternator
28-2654	A2007	Alternator
28-2655	A2002	Alternator
28-2658	A0081	Alternator
28-2659	A2016	Alternator
28-2662	A4005	Alternator
28-2666	A5001	Alternator
28-2672	A0148	Alternator
28-2673	A4018	Alternator
28-2679	A3041	Alternator
28-2684	A5030R	Alternator
28-2685	A4012	Alternator
28-2693	A3095	Alternator
28-2697	A4017	Alternator
28-2702	A3044	Alternator
28-2704	A4019	Alternator
28-2706	A4007	Alternator
28-2707	A4011	Alternator
28-2709	A4060	Alternator
28-2711	A0129	Alternator
28-2714	A6032	Alternator
28-2717	A4069	Alternator
28-2718	A0177	Alternator
28-2719	A4016	Alternator
28-2720	A0119	Alternator
28-2721	A4027	Alternator
28-2722	A0048	Alternator
28-2723	A4025	Alternator
28-2725	A4057	Alternator
28-2728	A4024	Alternator
28-2735	A4069	Alternator
28-2745	A0115	Alternator
28-2753	A4079	Alternator
28-2759	A5008	Alternator
28-2763	A0186	Alternator
28-2769	A0173	Alternator
28-2770	A3044	Alternator
28-2772	A2001	Alternator
28-2777	A0019	Alternator
28-2781	A4001	Alternator
28-2783	A0133	Alternator
28-2786	A2025	Alternator
28-2790	A0172	Alternator
28-2794	A1012	Alternator
28-2795	A3022	Alternator
28-2797	A3003	Alternator
28-2798	A4031	Alternator
28-2804	A5004	Alternator
28-2806	A0151	Alternator
28-2812	A5021	Alternator
28-2821	A4011	Alternator
28-2823	A5020	Alternator
28-2825	A9015	Alternator
28-2829	A5026	Alternator
28-2837	A0113	Alternator
28-2840	A0157	Alternator
28-2843	A0095	Alternator
28-2845	A4006	Alternator
28-2848	A5003	Alternator
28-2849	A4020	Alternator
28-2851	A3081	Alternator
28-2861	A9005	Alternator
28-2863	A0153	Alternator
28-2864	A0080	Alternator
28-2866	A0109	Alternator
28-2869	A1014	Alternator
28-2874	A2035	Alternator
28-2882	A0163	Alternator
28-2883	A0135	Alternator
28-2888	A0078	Alternator
28-2890	A2021	Alternator
28-2892	A5002	Alternator
28-2893	A0005	Alternator
28-2895	A3089	Alternator
28-2896	A4022	Alternator
28-2898	A9034	Alternator
28-2900	A5010	Alternator
28-2903	A2032	Alternator
28-2910	A1009	Alternator
28-2927	A0157	Alternator
28-2929	A3028	Alternator
28-2931	A3043	Alternator
28-2940	A0082	Alternator
28-2960	A0106	Alternator
28-2961	A0141	Alternator
28-2962	A0128	Alternator
28-2964	A0040	Alternator
28-2973	A0117	Alternator
28-2978	A2009	Alternator
28-2979	A0027	Alternator
28-2980	A5025	Alternator
28-2981	A4065	Alternator
28-2984	A3066	Alternator
28-2985	A0127	Alternator
28-2986	A0161	Alternator
28-2988	A0037	Alternator
28-2990	A0059	Alternator
28-2994	A3024	Alternator
28-2997	A1002	Alternator
28-2998	A5019	Alternator
28-2999	A4054	Alternator
28-3502	A1004	Alternator
28-3503	A4001	Alternator
28-3507	A1005	Alternator
28-3509	A0078	Alternator
28-3511	A3076	Alternator
28-3519	A4011	Alternator
28-3522	A0156	Alternator
28-3524	A0033	Alternator
28-3527	A3031	Alternator
28-3528	A4025	Alternator
28-3532	A4051	Alternator
28-3536	A5017	Alternator
28-3538	A5017	Alternator
28-3539	A0174	Alternator
28-3547	A2008	Alternator
28-3548	A5016	Alternator
28-3565	A0173	Alternator
28-3566	A4032	Alternator
28-3569	A0173	Alternator
28-3571	A4007	Alternator
28-3572	A5011	Alternator
28-3575	A0078	Alternator
28-3580	A4049	Alternator
28-3584	A1006	Alternator
28-3590	A0110	Alternator
28-3599	A0130	Alternator
28-3630	A0036	Alternator
28-3637	A0060	Alternator
28-3639	A3083	Alternator
28-3640	A4026	Alternator
28-3644	A0038	Alternator
28-3647	A4023	Alternator
28-3651	A4080	Alternator
28-3656	A1008	Alternator
28-3660	A0044	Alternator
28-3665	A1003	Alternator
28-3668	A0187	Alternator

ELSTOCK	AS	PRODUCT
28-3669	A0145	Alternator
28-3679	A0155	Alternator
28-3689	A0054	Alternator
28-3691	A0003	Alternator
28-3694	A0061	Alternator
28-3695	A3017	Alternator
28-3698	A0178	Alternator
28-3701	A4052	Alternator
28-3702	A3073	Alternator
28-3703	A0071	Alternator
28-3704	A3082	Alternator
28-3705	A0046	Alternator
28-3718	A0114	Alternator
28-3720	A0035	Alternator
28-3721	A9001	Alternator
28-3722	A4053	Alternator
28-3726	A0041	Alternator
28-3730	A0111	Alternator
28-3735	A3081	Alternator
28-3737	A0140	Alternator
28-3738	A3111	Alternator
28-3740	A4064	Alternator
28-3742	A0111	Alternator
28-3744	A0169	Alternator
28-3750	A4043	Alternator
28-3752	A3027	Alternator
28-3753	A4075	Alternator
28-3755	A3073	Alternator
28-3757	A4040	Alternator
28-3770	A0133	Alternator
28-3772	A3032	Alternator
28-3784	A0042	Alternator
28-3794	A0125	Alternator
28-3798	A3036	Alternator
28-3802	A3079	Alternator
28-3803	A3023	Alternator
28-3807	A0149	Alternator
28-3814	A0043	Alternator
28-3837	A3051	Alternator
28-3838	A6028	Alternator
28-3839	A2003	Alternator
28-3840	A0205R	Alternator
28-3842	A0036	Alternator
28-3846	A6001	Alternator
28-3847	A0205R	Alternator
28-3847WH	A0205R	Alternator
28-3851	A3072	Alternator
28-3853	A0189	Alternator
28-3857	A3092	Alternator
28-3861	A2011	Alternator
28-3865	A0050	Alternator
28-3866	A9004	Alternator
28-3867	A3058	Alternator
28-3868	A3054	Alternator
28-3870	A3087	Alternator
28-3871	A6033	Alternator
28-3873	A3077	Alternator
28-3875	A0043	Alternator
28-3887	A0045	Alternator
28-3888	A1011	Alternator
28-3891	A3037	Alternator
28-3900	A0143	Alternator
28-3903	A0056	Alternator
28-3914	A0188	Alternator
28-3918	A9002	Alternator
28-3919	A0059	Alternator
28-3921	A0032	Alternator
28-3928	A0162	Alternator
28-3933	A2014	Alternator
28-3936	A0052	Alternator
28-3938	A0044	Alternator
28-3951	A0057	Alternator
28-3954	A1009	Alternator
28-3955	A3090	Alternator
28-3958	A9006	Alternator
28-3960	A9032	Alternator
28-3961	A1003	Alternator
28-3963	A9016	Alternator
28-3977	A3038	Alternator
28-3978	A4045	Alternator
28-3989	A0158	Alternator
28-3995	A5033	Alternator
28-4501	A6002	Alternator
28-4504	A2006	Alternator
28-4506	A3088	Alternator
28-4507	A0187	Alternator
28-4508	A9007	Alternator
28-4509	A1016R	Alternator
28-4511	A5015	Alternator
28-4512	A3094	Alternator
28-4515	A4076	Alternator
28-4516	A5010	Alternator
28-4522	A4023	Alternator
28-4524	A3091	Alternator
28-4525	A0050	Alternator
28-4527	A4024	Alternator
28-4537	A0144	Alternator
28-4540	A3079	Alternator
28-4545	A9035	Alternator
28-4547	A0121	Alternator
28-4548	A0205R	Alternator
28-4553	A0160	Alternator
28-4556	A0195	Alternator
28-4566	A0157	Alternator
28-4567	A0052	Alternator
28-4570	A0191	Alternator
28-4576	A0171	Alternator
28-4582	A9009	Alternator
28-4588	A0065	Alternator
28-4596	A3063	Alternator
28-4597	A9017	Alternator
28-4601	A4034	Alternator
28-4602	A2030	Alternator
28-4603	A3053	Alternator
28-4605	A3013	Alternator
28-4611	A0046	Alternator
28-4613	A4049	Alternator
28-4614	A3035	Alternator
28-4616	A1015R	Alternator
28-4618	A3056	Alternator
28-4621	A0226	Starter
28-4621WH	A0226	Starter
28-4624	A3085R	Alternator
28-4625	A0228	Alternator
28-4626	A6006	Alternator
28-4628	A3052	Alternator
28-4632	A4046	Alternator
28-4633	A3037	Alternator
28-4634	A0075	Alternator
28-4637	A9017	Alternator
28-4641	A0049	Alternator
28-4642	A0068	Alternator
28-4643	A2006	Alternator
28-4644	A0209	Alternator
28-4645	A9021	Alternator
28-4647	A3039	Alternator
28-4648	A4034	Alternator
28-4650	A3065	Alternator
28-4652	A0224	Alternator
28-4655	A3110	Alternator
28-4669	A0071	Alternator
28-4675	A0033	Alternator
28-4684	A2023	Alternator
28-4692	A2037	Alternator
28-4695	A0146	Alternator
28-4697	A0146	Alternator
28-4700	A0142	Alternator
28-4701	A0049	Alternator
28-4702	A3074	Alternator
28-4704	A3067	Alternator
28-4706	A9018	Alternator
28-4716	A0047	Alternator
28-4719	A3054	Alternator
28-4725	A0199	Alternator
28-4726	A2029	Alternator
28-4727	A0208	Alternator
28-4728	A0201R	Alternator
28-4729	A0220	Alternator
28-4731	A3101	Alternator
28-4732	A3102	Alternator
28-4734	A0076	Alternator
28-4737	A3087	Alternator
28-4746	A4058	Alternator
28-4771	A0127	Alternator
28-4773	A0190	Alternator
28-4774	A0147	Alternator
28-4775	A0032	Alternator
28-4776	A0194	Alternator
28-4777	A0066	Alternator
28-4780	A6036	Alternator
28-4781	A6027	Alternator
28-4788	A0142	Alternator
28-4791	A3032	Alternator
28-4799	A5022	Alternator
28-4801	A5023	Alternator
28-4805	A4056	Alternator
28-4808	A0206	Alternator
28-4809	A6007	Alternator
28-4810	A6025	Alternator
28-4812	A3098R	Alternator
28-4814	A9008	Alternator
28-4816	A0170	Alternator
28-4818	A3033	Alternator
28-4820	A3078	Alternator
28-4823	A2029	Alternator
28-4829	A3105	Alternator

ELSTOCK	AS	PRODUCT
28-4835	A0217	Alternator
28-4837	A0216	Alternator
28-4843	A0196	Alternator
28-4844	A0218	Alternator
28-4846	A4061	Alternator
28-4849	A0221	Alternator
28-4851	A3084R	Alternator
28-4852	A3068	Alternator
28-4854	A6035	Alternator
28-4861	A0180	Alternator
28-4862	A3097	Alternator
28-4863	A0154	Alternator
28-4864	A0039	Alternator
28-4865	A0181	Alternator
28-4874	A0167	Alternator
28-4875	A0165	Alternator
28-4876	A0164	Alternator
28-4881	A0228	Alternator
28-4884	A0166	Alternator
28-4889	A4058	Alternator
28-4892	A6034	Alternator
28-4893	A6003	Alternator
28-4905	A4041	Alternator
28-4906	A6023	Alternator
28-4907	A6013	Alternator
28-4908	A9019	Alternator
28-4909	A3055	Alternator
28-4910	A6037	Alternator
28-4911	A3102	Alternator
28-4914	A3104	Alternator
28-4917	A4058	Alternator
28-4919	A3034	Alternator
28-4921	A3055	Alternator
28-4922	A6015	Alternator
28-4923	A2022	Alternator
28-4925	A4041	Alternator
28-4927	A4073	Alternator
28-4929	A4049	Alternator
28-4930	A3069	Alternator
28-4935	A3078	Alternator
28-4936	A0213	Alternator
28-4937	A0213	Alternator
28-4942	A0225	Alternator
28-4945	A0222	Alternator
28-4955	A9019	Alternator
28-4958	A5024	Alternator
28-4959	A6038	Alternator
28-4971	A0038	Alternator
28-4978	A3071	Alternator
28-4984	A3093	Alternator
28-4988	A0165	Alternator
28-4992	A2022	Alternator
28-5501	A0168	Alternator
28-5505	A0044	Alternator
28-5507	A0067	Alternator
28-5508	A3070	Alternator
28-5510	A3052	Alternator
28-5515	A0223	Alternator
28-5521	A6034	Alternator
28-5522	A0210	Alternator
28-5524	A9029	Alternator
28-5536	A0133	Alternator
28-5543	A0226	Starter
28-5554	A0159	Alternator
28-5555	A6023	Alternator
28-5560	A4048	Alternator
28-5565	A9029	Alternator
28-5591	A0200	Alternator
28-5618	A0207	Alternator
28-5619	A4082	Alternator
28-5620	A4083	Alternator
28-5623	A4084	Alternator
28-5632	A0144	Alternator
28-5641	A3107	Alternator
28-5645	A0213	Alternator
28-5650	A2038	Alternator
28-5656	A0215	Alternator
28-5665	A0067	Alternator
28-5668	A9004	Alternator
28-5674	A4072	Alternator
28-5675	A0150	Alternator
28-5677	A4070	Alternator
28-5678	A4071	Alternator
28-5684	A4085	Alternator
28-5685	A9036	Alternator
28-5687	A5009	Alternator
28-5688	A0043	Alternator
28-5690	A3087	Alternator
28-5693	A0227	Alternator
28-5694	A4050	Alternator
28-5698	A0204	Alternator
28-5702	A0227	Alternator
28-5807	A6029	Alternator
28-5808	A6030	Alternator
28-5849	A0229	Alternator
28-5862	A3106	Alternator
28-693	A3045	Alternator
28-946	A0098	Alternator
45-0091	S0151	Starter
45-0113	S0197	Starter
45-0150	S0220(BOSCH)R	Starter
45-0174	S0002	Starter
45-0178	S0235	Starter
45-0185	S0003	Starter
45-0190	S0003	Starter
45-0211	S0162	Starter
45-0219	S0068	Starter
45-0228	S0092	Starter
45-0252	S0118	Starter
45-0291	S0001	Starter
45-0313	S0220(BOSCH)R	Starter
45-0327	S0007	Starter
45-0345	S4021	Starter
45-0381	S0220(BOSCH)R	Starter
45-0398	S0118	Starter
45-0399	S0010	Starter
45-0412	S0075	Starter
45-0422	S0107	Starter
45-0440	S1009	Starter
45-0469	S3047	Starter
45-0473	S3047	Starter
45-0476	S2003	Starter
45-0479	S0065	Starter
45-0488	S0216	Starter
45-1091	S0041	Starter
45-1095	S5003	Starter
45-1101	S5008	Starter
45-1123	S0008	Starter
45-1154	S0040	Starter
45-1211	S5052	Starter
45-1245	S3047	Starter
45-1267	S1006	Starter
45-1271	S0009	Starter
45-1297	S0023	Starter
45-1298	S0145	Starter
45-1300	S0134	Starter
45-1302	S0063	Starter
45-1320	S0150	Starter
45-1354	S0107	Starter
45-1368	S0221(BOSCH)R	Starter
45-1370	S0011	Starter
45-1374	S9066	Starter
45-1392	S6027	Starter
45-1404	S9005	Starter
45-1428	S0151	Starter
45-1429	S0002	Starter
45-1431	S0235	Starter
45-1445	S0022	Starter
45-1462	S6010	Starter
45-1477	S0002	Starter
45-2116	S0021	Starter
45-2138	S6026	Starter
45-2170	S5047	Starter
45-2175	S0160	Starter
45-2178	S0024	Starter
45-2184	S0001	Starter
45-2196	S6025	Starter
45-2200	S3049	Starter
45-2201	S0097	Starter
45-2237	S0012	Starter
45-2240	S0196	Starter
45-2279	S0019	Starter
45-2308	S0040	Starter
45-2325	S5051	Starter
45-2344	S1015	Starter
45-2345	S1001	Starter
45-2353	S0170	Starter
45-2408	S5011	Starter
45-2452	S0109	Starter
45-2455	S0021	Starter
45-2459	S0221(BOSCH)R	Starter
45-2488	S3034	Starter
45-3007	S0079	Starter
45-3020	S0070	Starter
45-3066	S0076	Starter
45-3067	S0108	Starter
45-3091	S5013	Starter
45-3097	S0080	Starter
45-3103	S0078	Starter
45-3134	S0130	Starter
45-3138	S3048	Starter
45-3184	S5055	Starter
45-3199	S0075	Starter
45-3259	S6023	Starter
45-3261	S6005	Starter
45-3262	S0061	Starter

ELSTOCK	AS	PRODUCT
45-3281	S0074	Starter
45-3302	S0037	Starter
45-3332	S0085	Starter
45-3346	S9034	Starter
45-3349	S0107	Starter
45-3350	S0178	Starter
45-3352	S0216	Starter
45-3353	S0082	Starter
45-3400	S0071	Starter
45-3425	S5029	Starter
45-3439	S0137	Starter
45-3443	S0138	Starter
45-3444	S0173	Starter
45-3461	S3046	Starter
45-4013	S0194	Starter
45-4050	S0147	Starter
45-4088	S5049	Starter
45-469	S3047	Starter
47-0660	A0184	Alternator
47-0666	A0017	Alternator
47-0734	A0184	Alternator
47-0895	A3099R	Alternator
47-0896	A3099R	Alternator
48-0529	A0203	Alternator
48-0541	A4029	Alternator
48-0591	A0058	Alternator
48-0644	A0099	Alternator
48-0666	A0017	Alternator
48-0734	A0030	Alternator
48-0741	A0016	Alternator
48-0780	A0102	Alternator
48-0848	A0009	Alternator
48-0878	A0001	Alternator
48-0889	A2013	Alternator
48-0985	A5007	Alternator
48-0995	A0087	Alternator
48-1501	A3060	Alternator
48-1550	A0100	Alternator
48-1596	A0058	Alternator
48-1619	A2010	Alternator
48-1627	A6016	Alternator
48-1634	A0108	Alternator
48-1667	A3100R	Alternator
48-1745	A0017	Alternator
48-1758	A3060	Alternator
48-1782	A0026	Alternator
48-1801	A0025	Alternator
48-1826	A0010	Alternator
48-1845	A9024	Alternator
48-1893	A0087	Alternator
48-1905	A0002	Alternator
48-1921	A0030	Alternator
48-1922	A0097	Alternator
48-2545	A0025	Alternator
48-2563	A0008	Alternator
48-2583	A5005	Alternator
48-2613	A3059	Alternator
48-2639	A0029	Alternator
48-2756	A0021	Alternator
48-2765	A0088	Alternator
48-2838	A0101	Alternator
48-2851	A3018	Alternator

ELSTOCK	AS	PRODUCT
48-2852	A3018	Alternator
48-2859	A0022	Alternator
48-2922	A4010	Alternator
48-2937	A0007	Alternator
48-2989	A0023	Alternator
48-3674	A0023	Alternator
48-3684	A0185	Alternator
48-3687	A0007	Alternator
48-3728	A3059	Alternator
48-3764	A3060	Alternator
48-3771	A0011	Alternator
48-3980	A0175	Alternator
48-3984	A0073	Alternator
48-4519	A3030	Alternator
48-4552	A0136	Alternator
48-4557	A0136	Alternator
48-4563	A0136	Alternator
48-4636	A0034	Alternator
48-4667	A0034	Alternator
48-4778	A0034	Alternator
48-4845	A0120	Alternator
48-4847	A0122	Alternator
48-4859	A0074	Alternator
48-4860	A0072	Alternator
48-4867	A0053	Alternator
48-4918	A0123	Alternator
48-4951	A0124	Alternator
48-4993	A0063	Alternator
48-4999	A0193	Alternator
48-5500	A0062	Alternator
48-5534	A0122	Alternator
48-5549	A0064	Alternator
48-5816	A0211	Alternator
48-666	A0097	Alternator
48-741	A0017	Alternator
MOS12-10	S9057	Starter
MTA12-39	S4033	Starter
MTD12-14	S0128	Starter
MTS12-29	S4033	Starter
MTS12-39	S4033	Starter
MTS12-42	S4033	Starter
MTS12-48	S4033	Starter
NA546	A3092	Alternator

EXPOM	AS	PRODUCT
EX-961001	SS9018	Starter solenoid
EX-962001	SS9017	Starter solenoid

FACET	AS	PRODUCT
10527	SD1004	Drive
10612	SD1014	Drive
10640	SD1020	Drive
10641	SD1022	Drive
10647	SD0029	Drive
10648	SD0028	Drive
480118	SD1005	Drive
480135	SD1015	Drive
480320	SD0029	Drive
480321	SD1003	Drive
480322	SD1015	Drive
480410	SD3026	Drive
480411	SD1005	Drive
480414	SD1016	Drive
480461	SD1002	Drive

FACET	AS	PRODUCT
E480320	SD0029	Drive
E480321	SD1003	Drive
E480322	SD1015	Drive
E480410	SD0028	Drive

FAG	AS	PRODUCT
565007	ABE9018	Bearing
60002RSRC3	ABE9019	Bearing
6000C2HRS	ABE9019	Bearing
60012RSRC3	ABE9034	Bearing
6001C2HRS	ABE9034	Bearing
60022RSRC3	ABE9020	Bearing
60042RSRC3	ABE9035	Bearing
6082RSC3	ABE9010	Bearing
62002RSRC3	ABE9001	Bearing
62012HRSC3	ABE9002	Bearing
62012RSRC3	ABE9002	Bearing
62022RSRC3	ABE9003	Bearing
62032RSRC3	ABE9004	Bearing
62052RSRC3	ABE9038	Bearing
623042RSR	ABE9022	Bearing
6292RSRC3	ABE9042(NSK)	Bearing
63022RSRC3	ABE9005	Bearing
63032RSRC3	ABE9006	Bearing
63042RSRC3	ABE9040(NSK)	Bearing
63042ZRC3	ABE9040(NSK)	Bearing
806078	ABE9018	Bearing
NU202ETVP2	ABE9033	Bearing

FARCOM	AS	PRODUCT
103030	S9057	Starter
103425	S9043	Starter
103743	S9058	Starter

FARYMANN	AS	PRODUCT
5474041	S0208	Starter
5474046	S0208	Starter

FAUN	AS	PRODUCT
1701056	S0222(BOSCH)R	Starter

FEMSA	AS	PRODUCT
17061-10	SD4004	Drive
17061-26	SD4007	Drive
3305-2	SBU9014	Bushing
3305-44	SBU9035	Bushing
3305-56	SBU9014	Bushing
3305-89	SBU9035	Bushing
ALP12N-20	A4081	Alternator
ALP12N-24	A4081	Alternator
MOC12-10	S9057	Starter

FENDT	AS	PRODUCT
135902060010	S9043	Starter
F135902060010	S9043	Starter
G380900060010	S9044	Starter
G514900060100	S9043	Starter
X830100001	S9044	Starter
X830100006	S9043	Starter
X830100009	S9043	Starter
X830100009000	S9043	Starter

FIAT	AS	PRODUCT
1088304	A5033	Alternator
1098747	A5033	Alternator
1122238	A5033	Alternator
1140136	A3105	Alternator
1290205	SD0104	Drive

FIAT	AS	PRODUCT
130019808	S0064	Starter
1300198080	S0064	Starter
1319121080	S3009	Starter
1319555080	S4017	Starter
1329201080	S0089	Starter
1331329080	S4017	Starter
1342792080	S3002	Starter
1347058080	S0139	Starter
154011053	S0170	Starter
2022518	S9054	Starter
4114431	SBU9029	Bushing
4114442	SBU9036	Bushing
4154293	SD4004	Drive
4172004	S0118	Starter
4172113	S0116	Starter
4179626	S0008	Starter
4187587	S0118	Starter
4189861	ABH4002	A. Brush holder
4190094	ABH4002	A. Brush holder
4229113	S4033	Starter
4229114	S4033	Starter
4231016	S4023	Starter
4231018	S0118	Starter
4232191	S0118	Starter
4243124	SD4004	Drive
42498212	S0092	Starter
4269114	S0118	Starter
4278944	ABH4002	A. Brush holder
4395131	A4059	Alternator
4401806	S4033	Starter
4412894	S4036(MM)R	Starter
4429113	S4033	Starter
4429114	S4033	Starter
4434084	A4059	Alternator
4448694	S4036(MM)R	Starter
4451759	A4081	Alternator
4456152	A4081	Alternator
4458618	A4081	Alternator
4474564	ARC0045	Rectifier
4474729	A0012	Alternator
4474746	S0128	Starter
4474747	S0128	Starter
4474750	S0128	Starter
4474752	A0012	Alternator
4475122	SD4004	Drive
4475266	A0012	Alternator
4475268	A0012	Alternator
4475269	ARE0001	Regulator
46208441	A4004	Alternator
46231500	S4033	Starter
46231504	S4033	Starter
46231505	S4033	Starter
46231510	S4039	Starter
46231604	S0133	Starter
46231610	S0132	Starter
46231640	S4036(MM)R	Starter
46231642	S0148	Starter
46231650	A4047	Alternator
46231655	A4081	Alternator
46231657	A4063	Alternator
46231658	A4018	Alternator
46231659	A4063	Alternator
46231660	A4063	Alternator
46231670	A4017	Alternator
46231671	A4025	Alternator
46231680	A0012	Alternator
46231684	A4059	Alternator
46231687	A4059	Alternator
46231691	A4044	Alternator
46231692	A4075	Alternator
46231705	A4004	Alternator
46231721	A4044	Alternator
46231724	A4025	Alternator
46231740	A4065	Alternator
46231760	A4065	Alternator
46231762	A4065	Alternator
46231786	A4039	Alternator
46231787	A3019	Alternator
46305329	A4023	Alternator
46402984	S4039	Starter
46407644	A4003	Alternator
46407647	A4069	Alternator
46412678	A4017	Alternator
46412681	A4025	Alternator
46416343	A4069	Alternator
46417006	S4020	Starter
46419297	A4003	Alternator
46419332	S4015	Starter
46419392	S4015	Starter
46420960	A4003	Alternator
46420961	A4069	Alternator
46420962	A4004	Alternator
46420963	A0140	Alternator
46420965	A4007	Alternator
46420966	A4049	Alternator
46425518	A4049	Alternator
46428730	A4025	Alternator
46428731	A4017	Alternator
46428733	A4004	Alternator
46428734	A4060	Alternator
46429594	S4022	Starter
46430110	A4006	Alternator
46430111	A4053	Alternator
46430527	A4017	Alternator
46430529	A4025	Alternator
46430531	A4025	Alternator
46430533	A4024	Alternator
46430721	S0105	Starter
46430784	S0195	Starter
46431710	A4065	Alternator
46432301	S4033	Starter
46434930	A4006	Alternator
46436507	A4069	Alternator
46437412	A4075	Alternator
46437520	S0246	Starter
46439700	S0105	Starter
46441617	AFP4004	FW pulley
46442777	A4049	Alternator
46445094	A4065	Alternator
46445096	A4065	Alternator
46445100	A4044	Alternator
46445103	A4065	Alternator
46445658	A4023	Alternator
46445660	A4024	Alternator
46446292	A4065	Alternator
46448434	A4025	Alternator
46451529	S4027	Starter
46464276	A4007	Alternator
46468696	S0241	Starter
46472225	A4047	Alternator
46473784	SD0095	Drive
46475793	S4020	Starter
46478945	S0195	Starter
46518059	S4022	Starter
46521851	A4049	Alternator
46522234	S0246	Starter
46528046	A4018	Alternator
46530060	A4003	Alternator
46531437	S4027	Starter
46532168	A4049	Alternator
46532668	A0140	Alternator
46540293	A4007	Alternator
46540294	A4016	Alternator
46542889	A4058	Alternator
46543023	A4056	Alternator
46544329	A4043	Alternator
46548654	S4028	Starter
46554404	A4058	Alternator
46554407	S0105	Starter
46740242	S4028	Starter
46740243	A4024	Alternator
46748351	S0230	Starter
46748353	A4034	Alternator
46748357	A4058	Alternator
46758240	S0089	Starter
46763529	S4028	Starter
46763532	A4025	Alternator
46763533	A4043	Alternator
46763534	A4043	Alternator
46765835	A4027	Alternator
46765836	A4023	Alternator
46765837	A4024	Alternator
46765838	A4043	Alternator
46765842	A4075	Alternator
46769369	A4023	Alternator
46774413	A4049	Alternator
46774415	S4020	Starter
46774420	A4017	Alternator
46774429	A4050	Alternator
46774430	A4077	Alternator
46782213	A4043	Alternator
46791692	S0241	Starter
46800152	S3060	Starter
46800159	S0230	Starter
46809068	A4034	Alternator
468130061	A0140	Alternator
46813058	S4025	Starter
46813061	A0140	Alternator
46813064	S4025	Starter
46816793	S4025	Starter
46816971	S3060	Starter
46816973	S4025	Starter
46823543	S0186R	Starter
46823546	A3104	Alternator
468235460	A3104	Alternator
46823547	A3055	Alternator

FIAT	AS	PRODUCT
46823548	S3017	Starter
46830212	S0246	Starter
46832123	A0191	Alternator
46835093	S3060	Starter
46835094	S3060	Starter
46841963	A0140	Alternator
46841966	A0191	Alternator
46843091	A4058	Alternator
4699704	S0118	Starter
4699705	S9055	Starter
4701920	S0118	Starter
4702248	S0116	Starter
4706008	S0092	Starter
4712894	S9054	Starter
4713805	S9054	Starter
4715786	A4029	Alternator
4716026	S0092	Starter
4716062	S0092	Starter
4717871	A4029	Alternator
4719664	S4037(MM)R	Starter
4721589	A4039	Alternator
4721591	A4039	Alternator
4721592	A4039	Alternator
4721890	A4029	Alternator
4722724	A4029	Alternator
4728682	S0152	Starter
4731839	A4039	Alternator
4732241	S0008	Starter
4735444	S4023	Starter
4737754	S0118	Starter
4737756	S0092	Starter
4737758	S9054	Starter
4738563	A4029	Alternator
4738569	A4029	Alternator
4738570	A4029	Alternator
4738571	A4029	Alternator
4738772	A4029	Alternator
4738775	A4029	Alternator
4741669	S4036(MM)R	Starter
4741699	S4036(MM)R	Starter
4744841	S4021	Starter
4745930	S4037(MM)R	Starter
4750583	A4039	Alternator
4752403	S4021	Starter
4755111	S0092	Starter
4755112	S9054	Starter
4763995	S4023	Starter
4782802	S0008	Starter
4784745	S0221(BOSCH)R	Starter
4784747	S0221(BOSCH)R	Starter
4786913	A4029	Alternator
4799364	A4030	Alternator
4804376	S0110	Starter
4807373	S0152	Starter
4807374	S4037(MM)R	Starter
4807375	S0116	Starter
4807376	S0110	Starter
4807377	S4021	Starter
4807378	S0118	Starter
4807379	S0092	Starter
4808500	A4030	Alternator
4808502	A4030	Alternator
4808503	A4039	Alternator
4808505	A4039	Alternator
4808507	A4030	Alternator
4808519	A4029	Alternator
4808526	A4029	Alternator
4808528	A4029	Alternator
4856056	S4037(MM)R	Starter
4998353	A0012	Alternator
50012833	A4065	Alternator
500345767	A3093	Alternator
500371244	A3053	Alternator
504088796	AFP0070	FW pulley
5101645	A0012	Alternator
51700670	A4072	Alternator
51700675	A4072	Alternator
51709131	A4058	Alternator
51709133	A4058	Alternator
51714791	A4058	Alternator
51714794	A4058	Alternator
51718499	A3078	Alternator
51772325	S4025	Starter
517723250	S4025	Starter
51779086	S0159	Starter
51782321	S0186R	Starter
51784845	A4074	Alternator
51788658	A4083	Alternator
51804744	S0237	Starter
51805800	A4074	Alternator
51812501	S4025	Starter
51832950	S4025	Starter
51854903	A4083	Alternator
51859037	A4058	Alternator
55185076	A4074	Alternator
55186280	AFP3008	FW pulley
55192482	S0186R	Starter
55193355	S4025	Starter
55193356	S4025	Starter
55195029	S0230	Starter
55195030	S4028	Starter
55195211	S0186R	Starter
551952110	S0195	Starter
55196400	S4022	Starter
55204116	S3017	Starter
55561503	S3018	Starter
55779086	S0159	Starter
5895028	A4003	Alternator
5947366	A4081	Alternator
5947376	A4081	Alternator
5955557	A4065	Alternator
5958394	A4059	Alternator
5958395	A4059	Alternator
5958565	A4065	Alternator
5960289	A4065	Alternator
5967595	A4059	Alternator
5967596	A4059	Alternator
5972684	S4033	Starter
5973034	A4081	Alternator
5973035	A4081	Alternator
5984563	S0204	Starter
5985182	S0133	Starter
5985265	S0132	Starter
5992153	A4065	Alternator
5992155	A4065	Alternator
5999868	A4063	Alternator
5999869	A4063	Alternator
5999906	S4039	Starter
60512969	S0166	Starter
60513576	A0212	Alternator
60755012	IM0001	Ignition Module
60755094	IM0001	Ignition Module
60812535	A4023	Alternator
60812814	A4025	Alternator
60817002	S0186R	Starter
60964260	A0229	Alternator
609642600	A0229	Alternator
61227993	S0007	Starter
6706931	S4021	Starter
703009641	A3104	Alternator
7073094	SD0042	Drive
71716554	S3009	Starter
71716562	S3002	Starter
71716563	S3002	Starter
71716564	S3002	Starter
71716565	S3002	Starter
71716608	A3017	Alternator
71716609	A3023	Alternator
71716671	A3027	Alternator
71718905	A3023	Alternator
71719595	S3002	Starter
71719598	S0084	Starter
71719599	S0084	Starter
71719600	S3002	Starter
71719601	S3002	Starter
71719602	S0084	Starter
71719603	S0084	Starter
71719604	S3002	Starter
71719605	S0084	Starter
71719608	S3002	Starter
71719609	S3002	Starter
71719943	A3027	Alternator
71721156	A4069	Alternator
71721512	A4034	Alternator
71722353	S0163	Starter
71728811	S3002	Starter
71732307	A0142	Alternator
71733552	A0142	Alternator
71739718	S3003	Starter
71739864	S0088	Starter
71746669	S0230	Starter
71748653	S9062	Starter
71755142	A4048	Alternator
71782363	S3002	Starter
71789529	S0139	Starter
73503235	A4073	Alternator
7533853	A4059	Alternator
7541401	A4065	Alternator
7541823	A4059	Alternator
7546342	A4081	Alternator
7546343	A4081	Alternator
7552284	A4065	Alternator
7552382	A4065	Alternator
7554832	A4065	Alternator
7554833	A4065	Alternator
7564668	S4036(MM)R	Starter

FIAT	AS	PRODUCT
7565832	A4063	Alternator
7580207	A4059	Alternator
7580575	S0148	Starter
7589435	S0132	Starter
7608589	S0204	Starter
7612952	S4039	Starter
7621040	S4039	Starter
76221040	S4039	Starter
7629272	A4065	Alternator
7634026	A0111	Alternator
7636428	A4018	Alternator
7636431	A4018	Alternator
7646189	A4065	Alternator
7651070	A4044	Alternator
7651812	A4065	Alternator
7658554	S0133	Starter
7658555	S0132	Starter
7666132	S0148	Starter
7666135	S0148	Starter
7667227	S4039	Starter
7668314	S0057	Starter
76683140	S0057	Starter
7668988	S4033	Starter
7689341	A0111	Alternator
7692102	S0105	Starter
7697864	A4065	Alternator
7701840	A4065	Alternator
7702242	A4044	Alternator
7702245	A4044	Alternator
77028560	S4037(MM)R	Starter
7704356	A4047	Alternator
77050262	S0092	Starter
77050550	A4029	Alternator
77050562	S0092	Starter
77080561	S4021	Starter
77110410	A4081	Alternator
77110411	A4081	Alternator
7711092	A4047	Alternator
7713061	A0111	Alternator
7713141	A4018	Alternator
77145410	A0012	Alternator
77150410	A0012	Alternator
7716771	S0204	Starter
77175430	S4033	Starter
7719428	A4051	Alternator
77201430	S4033	Starter
77250410	A0012	Alternator
7727487	S0132	Starter
7727534	S0057	Starter
77305410	A4063	Alternator
77305430	S4039	Starter
77320410	A4059	Alternator
77347410	A4018	Alternator
77347411	A4063	Alternator
77362558	AFP0029	FW pulley
77362721	AFP3008	FW pulley
77363303	AFP3013	FW pulley
77363565	AFP0062	FW pulley
77363948	AFP6013	FW pulley
77364082	AFP0027	FW pulley
77364101	SS0043	Starter solenoid
77364148	AFP6009	FW pulley
77365120	SS0068	Starter solenoid
77367411	A4059	Alternator
7737262	S4033	Starter
7740560	S0118	Starter
77412430	S0133	Starter
77425430	S0204	Starter
77445430	S4023	Starter
77452430	S0132	Starter
77503410	A4065	Alternator
77515411	A4039	Alternator
77515430	S4036(MM)R	Starter
7765558	A4059	Alternator
77671430	S0132	Starter
7769840	A4049	Alternator
7770210	S0105	Starter
7772459	S4022	Starter
7773812	S4020	Starter
7779821	A4069	Alternator
7781075	A4027	Alternator
7782314	A4023	Alternator
7785449	S4022	Starter
7796598	S4022	Starter
79023774	SD4005	Drive
79026097	SBU9010	Bushing
79028900	SD0046	Drive
79028909	SD0046	Drive
79033659	SD0054	Drive
79052241	SD0104	Drive
79052271	SBU9005	Bushing
79052278	SBU9015	Bushing
79070381	ARC4009	Rectifier
79080373	SA4018	Starter armature
79081045	SD4016	Drive
7980335	SS4003	Starter solenoid
7980336	SS4004	Starter solenoid
7984630	SA4018	Starter armature
8122126	SD0005	Drive
8122129	SD0046	Drive
8190407	ARE4006	Regulator
82187534	SBU9035	Bushing
82277181	SBU9008	Bushing
82277189	SBU9007	Bushing
82305274	SBU9003	Bushing
82305276	SBU9013	Bushing
851075	SD1003	Drive
852763	SD1003	Drive
882005018	S9054	Starter
88205005	S0152	Starter
88206020	A4029	Alternator
8962687	S9054	Starter
8997795	SBU9011	Bushing
8997805	SS0003	Starter solenoid
9003925	SBR0005	Starter bracket
9004229	SD0005	Drive
9008243	SD0046	Drive
908431	SBU9037	Bushing
9405835568	SD3001	Drive
95681447	S0123	Starter
9609313280	S3032	Starter
9613015980	S3009	Starter
9613230280	S3009	Starter
9616862980	A3057	Alternator
9619310280	S3009	Starter
9619333080	A3057	Alternator
9621791480	A3027	Alternator
9624291480	S3002	Starter
9625382680	S3002	Starter
9635659580	S0163	Starter
9635659780	S0163	Starter
9637813680	S3016	Starter
9639396480	A3074	Alternator
9639846780	S0163	Starter
9646068880	A3074	Alternator
9658144780	S0123	Starter
9817132	SS0009	Starter solenoid
9817920	SD0054	Drive
9817926	SS0003	Starter solenoid
98490185	A3019	Alternator
98490186	A3041	Alternator
9916076	SBU9037	Bushing
9917925	SBH0003	S. Brush holder
9918339	SBU9004	Bushing
9920337	SBU9005	Bushing
9920342	SBU9015	Bushing
9920623	SBU9007	Bushing
9920672	SD0015	Drive
992235	A4059	Alternator
9923271	ABE9008	Bearing
9925774	SBU9003	Bushing
9925776	SBU9013	Bushing
9926095	SS0003	Starter solenoid
9926101	SBU9012	Bushing
9926112	SD0046	Drive
9927730	ARC0045	Rectifier
9927783	SBU9039	Bushing
9927787	SBU9028	Bushing
9927789	SBU9039	Bushing
9927796	SBU9038	Bushing
9927829	ARE0001	Regulator
9929081	SD4005	Drive
9930715	SS0003	Starter solenoid
9932916	SBU9008	Bushing
9932923	SD0042	Drive
9934595	ARC4023	Rectifier
9934752	SD0118	Drive
9934791	ARE0001	Regulator
9934958	ARC4023	Rectifier
9935112	ABH4001	A. Brush holder
9935196/97	MASX17-18	Sta. Brush set
9935731	SD4005	Drive
9936050	SD4012	Drive
9936594	SS0005	Starter solenoid
9936616	SBU9009	Bushing
9936660	SS0011	Starter solenoid
9936661	SBU9003	Bushing
9936662	SBU9013	Bushing
9936720	SBU9010	Bushing
9936770	SS4003	Starter solenoid
9936772	SD4005	Drive
9936996	SD4006	Drive
9937207	SD4007	Drive
9937419	SD4007	Drive
9938235	SD4012	Drive
9938328	SD4011	Drive

FIAT	AS	PRODUCT
9939194	SD0036	Drive
9939772	SBU9016	Bushing
9939784	SD0051	Drive
9939826	ARE4003	Regulator
9939915	SD4009	Drive
9939968	ABR4028	Bracket
9939969	AS4004	Stator
9940006	ABR4028	Bracket
9940007	ABR4030	Bracket
9940095	IM4001	Ignition Module
9940149	ABR4028	Bracket
9940293	ARC4009	Rectifier
9940468	APC4004	Plastic cover
9940740	SD0044	Drive
9940859	ABR4029	Bracket
9941193	ARE4003	Regulator
9941300	SD4009	Drive
9941371	SD4014	Drive
9941467	SD4011	Drive
9941642	SD4012	Drive
9941746	SD4007	Drive
9941751	SD4006	Drive
9941846	SD4019	Drive
9944373	SD0045	Drive
9944575	SS4022	Starter solenoid
9945556	SD4023	Drive
9945557	SS4010	Starter solenoid
9945630	SS4011	Starter solenoid
9946071	ARC4012	Rectifier
9946913	SD4021	Drive
9947748	SD0102	Drive
9947831	SD0071	Drive
9947838	SD0088	Drive
9947959	SS4001	Starter solenoid
9948135	SD4032	Drive
9948225	AFP4001	FW Pulley
9948346	SD4023	Drive
9948513	AFP4002	FW pulley
9949129	AFP4002	FW pulley
9949387	AR0013	Rotor
9949580	AFP0017	FW pulley
9949627	AFP3013	FW pulley
9951269	AFP4002	FW pulley
9955125	SS0003	Starter solenoid
9956550	SA4012	Starter armature
9956552	MASX17-18	Sta. Brush set
9956556	MASX17-18	Sta. Brush set
9956666	SS0009	Starter solenoid
9956667	SBU9010	Bushing
9957705	SS4003	Starter solenoid
9957707	SD4005	Drive
9957715	ABH4001	A. Brush holder
9957919	SD0046	Drive
9959560	SS0003	Starter solenoid
9959566	SBH0003	S. Brush holder
9959572	SD0054	Drive
9959805	SS0015	Starter solenoid
9959813	SD0050	Drive
9960132	AS4001	Stator
9983359	ABH4001	A. Brush holder
9983364	ARC4023	Rectifier
9983619	SBU9010	Bushing

FIAT	AS	PRODUCT
9984246	SD0005	Drive
9986109	SS4004	Starter solenoid
9986112	SD4005	Drive
9986144	SS4003	Starter solenoid
FORD	**AS**	**PRODUCT**
1001869	A4005	Alternator
1005351	A4012	Alternator
1007765	S3025	Starter
1008795	S0247	Starter
1008836	S0247	Starter
1011331	S0096	Starter
1012257	A4080	Alternator
1015821	A4005	Alternator
1017500	A5002	Alternator
1018139	IC9003	Ignition Coil
1018818	A0118	Alternator
1018883	S0096	Starter
1019077	A0148	Alternator
1021198	A0016	Alternator
1021397	A9003	Alternator
1024508	S9001	Starter
1024864	A9003	Alternator
1027928	S6021	Starter
1030151	S0157	Starter
1031134	A9003	Alternator
1031896	A0077	Alternator
1031898	A0118	Alternator
1032139	A4005	Alternator
1032652	A9003	Alternator
1032666	S3041	Starter
1035755	A9002	Alternator
1036244	A0197	Alternator
1053656	A4019	Alternator
1057654	S9031	Starter
1057661	S9015	Starter
1057793	A9003	Alternator
1058429	S0161	Starter
1058821	A4031	Alternator
1059179	S9001	Starter
1059564	S3025	Starter
1061267	S0161	Starter
1063999	S0096	Starter
1064000	S0096	Starter
1066102	IC9003	Ignition Coil
1066407	A4005	Alternator
10670F7RU	SD9005	Drive
1067601	IC9003	Ignition Coil
1071383	A4005	Alternator
1072156	S0027	Starter
1073049	A4031	Alternator
1073093	S0161	Starter
1073108	S9001	Starter
1074633	A4019	Alternator
1075786	IC9003	Ignition Coil
1076141	S9015	Starter
1079312	A4021	Alternator
1085273	S9015	Starter
1086299	A5002	Alternator
1087280	S9031	Starter
1088649	S0096	Starter
1090085	A4035	Alternator
1090424	A9003	Alternator

FORD	AS	PRODUCT
1092115	S0096	Starter
1092117	S0157	Starter
1093245	A0198	Alternator
1093471	S9001	Starter
1097304	A4028	Alternator
1097305	A4035	Alternator
1100711	A0127	Alternator
1100712	A0059	Alternator
1104931	A9002	Alternator
1104987	A9003	Alternator
1105310	S9001	Starter
1107444	A4019	Alternator
1107446	A4005	Alternator
1110413	A0059	Alternator
1111210	S0248	Starter
1111213	IC9003	Ignition Coil
1116389	S0096	Starter
1117829	A4046	Alternator
1118336	S0161	Starter
1119835	IC9003	Ignition Coil
1120211	A9011	Alternator
1120213	A9016	Alternator
1120214	S9004	Starter
1120215	S9002	Starter
1122105	A4045	Alternator
1124015	A9011	Alternator
1126051	A4021	Alternator
1126987	S0161	Starter
1127350	A0198	Alternator
1128296	A4046	Alternator
1130402	IC9003	Ignition Coil
1131820	A9011	Alternator
1133994	S9035	Starter
1136152	A4005	Alternator
1140110	S9002	Starter
1140111	S9004	Starter
1140135	A9020	Alternator
1140138	A5034	Alternator
1140139	A5029	Alternator
1140694	A9016	Alternator
1140696	A9011	Alternator
1140757	S9020	Starter
1140760	S0096	Starter
1144182	A4021	Alternator
1144505	S9020	Starter
1145715	A9023	Alternator
1147432	S0248	Starter
1149703	S0185	Starter
1151212	A9011	Alternator
1151213	A9016	Alternator
1151214	A4021	Alternator
1151216	S0158	Starter
1151641	S9002	Starter
1151642	S9015	Starter
12029AB	IC9003	Ignition Coil
1205240	S9015	Starter
1211891	A9011	Alternator
1214371	S9002	Starter
1215766	A4021	Alternator
1218885	S9004	Starter
1219711	A4021	Alternator
1221059	A4021	Alternator

FORD	AS	PRODUCT
1229258	A6010	Alternator
1229259	A6018	Alternator
1229421	A9012	Alternator
1229424	A9023	Alternator
1229425	S0161	Starter
1229427	S9036	Starter
1231963	S9033	Starter
1233234	S9036	Starter
1237323	S0096	Starter
1250901	S0158	Starter
1251700	S9030	Starter
1253624	A0059	Alternator
1254222	S9036	Starter
1255711	A6018	Alternator
1255712	A6010	Alternator
1256552	A6011	Alternator
1300504	S9030	Starter
1301377	A4021	Alternator
1301496	A4028	Alternator
1301511	A4035	Alternator
1301530	A4021	Alternator
1302007	A6026	Alternator
1303447	A9020	Alternator
1307487	A4021	Alternator
1307578	S0096	Starter
1309581	S0185	Starter
1317972	IC9003	Ignition Coil
1319929	IC9003	Ignition Coil
1322879	A6019	Alternator
1325943	S9029	Starter
1345314	S9032	Starter
1350459	S9020	Starter
1351969	S9033	Starter
1351989	S9033	Starter
1352431	A6026	Alternator
1361258	A4035	Alternator
1365666	S0158	Starter
1366473	S9029	Starter
1366986	S9030	Starter
1367529	S9015	Starter
1368970	S9036	Starter
1368974	S9020	Starter
1372739	S0123	Starter
1376305	S9033	Starter
1379702	S9030	Starter
1379703	S9063	Starter
1385378	S0123	Starter
1385784	S9033	Starter
1387062	S9002	Starter
1388569	S9015	Starter
1404791	A0200	Alternator
1416205	S0247	Starter
1416231	S0096	Starter
1429688	A9012	Alternator
1429689	A9012	Alternator
1449615	S9002	Starter
1450653	S9002	Starter
1464756	A9020	Alternator
1464779	A9011	Alternator
1464782	A9016	Alternator
1464784	A9012	Alternator
1464785	A9012	Alternator
1464788	A9020	Alternator
1465010	S9004	Starter
1465115	S9033	Starter
1465173	A9012	Alternator
1469712	S9036	Starter
1469721	S9033	Starter
1473072	S0096	Starter
1477482	S9030	Starter
1477737	A6010	Alternator
1477738	A6018	Alternator
1477740	A6026	Alternator
1477856	A9020	Alternator
1477859	A9020	Alternator
1477971	A9012	Alternator
1477972	A9012	Alternator
1477973	S9032	Starter
1477974	S9032	Starter
1478119	A9016	Alternator
1478129	S9029	Starter
1478608	A9011	Alternator
1483817	S9020	Starter
1496231	A9022	Alternator
1525794	S9030	Starter
1525795	S9063	Starter
1530298	A6019	Alternator
1530299	A6011	Alternator
1535268	S0096	Starter
1535437	A4058	Alternator
1535628	S0096	Starter
1539686	S0096	Starter
1541002	S9002	Starter
1545138	A9020	Alternator
1551240	S9002	Starter
1552432	S9002	Starter
1574338	S0123	Starter
1575034	S0096	Starter
1649067	IC9003	Ignition Coil
1659058	A4013	Alternator
1668894	A4001	Alternator
1C1T10300AE	A0068	Alternator
1C1T10300AF	A0068	Alternator
1C3U11424AA	SBH9005	S. Brush holder
1C3U11434AA	SBH9005	S. Brush holder
1M2111000AA	S3041	Starter
1M5T10300BA	A4021	Alternator
1M5T10300BB	A4021	Alternator
1M5T10300BC	A4021	Alternator
1M5T10300BD	A4021	Alternator
1S4U11000AA	S9035	Starter
1S7G12029AB	IC9003	Ignition Coil
1S7G12029AC	IC9003	Ignition Coil
1S7T10300AA	A9033	Alternator
1S7T10300BA	A9011	Alternator
1S7T10300BB	A9011	Alternator
1S7T10300BC	A9011	Alternator
1S7T10300BD	A9011	Alternator
1S7T10300BE	A9011	Alternator
1S7T10300CA	A9016	Alternator
1S7T10300CB	A9016	Alternator
1S7T10300CC	A9016	Alternator
1S7T10300CD	A9016	Alternator
1S7T10300CE	A9016	Alternator
1S7T10300CF	A9016	Alternator
1S7T10300DA	A9011	Alternator
1S7T10300DB	A9011	Alternator
1S7T10300DC	A9011	Alternator
1S7T10300DD	A9011	Alternator
1S7T10300DE	A9011	Alternator
1S7U10A352DB	AFP9007	FW pulley
1S7U10A352EA	AFP9007	FW pulley
1S7U11000AB	S9004	Starter
1S7U11000AC	S9004	Starter
1S7U11000AD	S9004	Starter
1S7U11000AE	S9004	Starter
1S7U11000AF	S9004	Starter
1S7U11000BA	S9002	Starter
1S7U11000BB	S9002	Starter
1S7U11000BC	S9002	Starter
1S7Z10346AA	A9033	Alternator
1S7Z10346AARM	A9033	Alternator
1S7Z12029AA	IC9003	Ignition Coil
1X4310300BD	A6029	Alternator
1X4310300CB	A6030	Alternator
1X4U11000AA	S9015	Starter
2C1T10300AA	A0068	Alternator
2C1T10300AB	A0068	Alternator
2C1T10300BA	A0068	Alternator
2C3U10300BB	A0043	Alternator
2M5T10300AB	A4021	Alternator
2M5T10300AC	A4021	Alternator
2M5T10300AD	A4021	Alternator
2RD911339	SBU9004	Bushing
2S6T10300AA	A9020	Alternator
2S6T10300AB	A9020	Alternator
2S6T10300AC	A9020	Alternator
2S6T10300BA	A3105	Alternator
2S6T10300BB	A3105	Alternator
2S6T10300CB	A5034	Alternator
2S6T10300CC	A5034	Alternator
2S6T10300CD	A5034	Alternator
2S6T10300DB	A5029	Alternator
2S6T10300FA	A9023	Alternator
2S6U11000CA	S0096	Starter
2S6U11000CB	S0096	Starter
2S6U11000CC	S0096	Starter
2S6U11000DA	S0185	Starter
2S6U11000DB	S0185	Starter
2S6U11000EA	S9020	Starter
2S6U11000EB	S9020	Starter
2S6U11000EC	S9020	Starter
2S6U11000ED	S9020	Starter
2S6U11000EE	S9020	Starter
2S7T11000AA	S9015	Starter
2S7T11000AB	S9015	Starter
2S7T11000AC	S9015	Starter
2S7T11000AD	S9015	Starter
2S7T11000DA	S9002	Starter
2S7T11000DB	S9002	Starter
2S7T11000DC	S9002	Starter
2T1411000BA	S9032	Starter
2T1411000BB	S9032	Starter
2T1411000BC	S9032	Starter
2T1411000CB	S9032	Starter
2T1411000CC	S9032	Starter

FORD	AS	PRODUCT
2T1U10300AB	A9012	Alternator
2T1U10300AC	A9012	Alternator
2T1U10300AD	A9012	Alternator
2T1U10300AE	A9012	Alternator
2T1U10300AF	A9012	Alternator
2T1U10300AG	A9012	Alternator
2T1U10300AH	A9012	Alternator
2T1U10300AK	A9012	Alternator
2T1U10300AL	A9012	Alternator
2T1U10300BB	A9012	Alternator
2T1U10300BC	A9012	Alternator
2T1U10300BD	A9012	Alternator
2T1U10300CA	A9012	Alternator
2T1U10300CB	A9012	Alternator
2T1U10300CC	A9012	Alternator
2T1U10300CD	A9012	Alternator
2T1U10300CE	A9012	Alternator
2T1U10300CF	A9012	Alternator
3395459	AFP9003	FW pulley
3601014	A5020	Alternator
3M2110300AA	A0127	Alternator
3M2110300BA	A0059	Alternator
3M5T10300LC	A6019	Alternator
3M5T10300LD	A6019	Alternator
3M5T10300PB	A6010	Alternator
3M5T10300PC	A6010	Alternator
3M5T10300PD	A6010	Alternator
3M5T10300VB	A6011	Alternator
3M5T10300VC	A6011	Alternator
3M5T10300VD	A6011	Alternator
3M5T10300YB	A6018	Alternator
3M5T10300YC	A6018	Alternator
3M5T10300YD	A6018	Alternator
3M5T11000AB	S9030	Starter
3M5T11000AC	S9004	Starter
3M5T11000AD	S9030	Starter
3M5T11000AE	S9030	Starter
3M5T11000CB	S9036	Starter
3M5T11000CC	S9036	Starter
3M5T11000CD	S9036	Starter
3M5T11000CE	S9036	Starter
3M5T11000CF	S9036	Starter
3M5T11000DB	S9033	Starter
3M5T11000DC	S9033	Starter
3M5TLC	A6019	Alternator
3M5TLD	A6019	Alternator
3S5T10300AA	A9023	Alternator
3S5T10300AB	A9023	Alternator
3S6T10300AA	A9020	Alternator
3S6T10300AB	A9020	Alternator
3S6T10300AC	A9020	Alternator
3S6T10300AD	A9020	Alternator
4022225	S0158	Starter
4063849	S9029	Starter
4063856	S9030	Starter
4069776	A0043	Alternator
4078768	S9002	Starter
4098414	A0043	Alternator
4112235	A0068	Alternator
4332279	A0043	Alternator
4344538	A5020	Alternator
4362258	A9021	Alternator
4371000	A9012	Alternator
4374447	A9012	Alternator
4374448	A9012	Alternator
4392207	A0068	Alternator
4394204	A9012	Alternator
4424968	S9032	Starter
4443760	S9032	Starter
4461712	A9021	Alternator
4509615	S9002	Starter
4520765	S9002	Starter
4529404	S9002	Starter
4531025	A9012	Alternator
4531026	A9012	Alternator
4587107	S9030	Starter
4635595	S9030	Starter
4742541	S9002	Starter
4L3U10C359AA	ARE9033	Regulator
4M5G12029ZA	IC9003	Ignition Coil
4M5T10300KB	A6026	Alternator
4M5T10300LA	A4068	Alternator
4M5T10300LB	A4068	Alternator
4M5T10300LC	A4068	Alternator
4M5T10300UB	A6026	Alternator
4M5T10300UC	A6026	Alternator
4M5T11000AA	S9029	Starter
4M5T11000AB	S9029	Starter
4M5T11000AC	S9029	Starter
4M5T11000FA	S9033	Starter
4M5T11000FB	S9033	Starter
4M5T11000FC	S9033	Starter
4M5T11000FD	S9033	Starter
4S4T11000AA	S9030	Starter
4S6911000AA	S0185	Starter
4X4U11000AA	S9015	Starter
4X4U11000AB	S9015	Starter
5026096	A4011	Alternator
5026113	A4012	Alternator
5027131	S0247	Starter
5027810	A4002	Alternator
5027845	A4013	Alternator
5027848	A4001	Alternator
5029143	S9031	Starter
5029902	A4001	Alternator
5029923	A4041	Alternator
5030343	A4031	Alternator
5030656	A0153	Alternator
53R211350A	SD1019	Drive
5M5Q10344AA	AFP9006	FW pulley
5M5Q10344AB	AFP9006	FW pulley
6077429	IC9003	Ignition Coil
6094911	AS0003	Stator
6114855	S0245	Starter
6153451	IM0001	Ignition Module
6156187	ARC0062	Rectifier
6156192	AS0004	Stator
6159437	IM0001	Ignition Module
6160440	S4007	Starter
6503280	IC9003	Ignition Coil
6694981	A4041	Alternator
6729337	A9003	Alternator
6775699	S9019	Starter
6775704	S9031	Starter
6816674	S0247	Starter
6860289	IC9003	Ignition Coil
69AB11135AA	SBU9008	Bushing
69AB11135CA	SBU9001	Bushing
69EB10304AA	ARC4010	Rectifier
6C1T10300BA	A0200	Alternator
6C1T10300BB	A0200	Alternator
6C1T10300BC	A0200	Alternator
6C1T11000AB	S0123	Starter
6C1T11000AC	S0123	Starter
6C1T11000AD	S0123	Starter
6G9N11000AA	S9030	Starter
6G9N11000AB	S9030	Starter
6G9N11000FA	S9033	Starter
6G9N11000JA	S9063	Starter
6G9N11000JB	S9063	Starter
6G9N11000KB	S0155	Starter
6S4T11000AA	S9030	Starter
7003146	S0069	Starter
702000150	S9045	Starter
7041784	S9015	Starter
7066376	A9003	Alternator
7118750	A0148	Alternator
715F11000MA	S4007	Starter
715F11057AA	BSX96	Sta. Brush set
71BB10316AA	ARE0001	Regulator
71BB11186AA	SBU9003	Bushing
71BB11350DA	SD0105	Drive
71YB11000AA	S4004	Starter
7203201	A0077	Alternator
7203211	S0146	Starter
7275999	A0152	Alternator
7276001	A0148	Alternator
72GB10336AA	AS0002	Stator
7302659	A4001	Alternator
7308195	A9003	Alternator
7312901	A4031	Alternator
733F11005AA	SA0012	Starter armature
733F11082AA	SF0002	Starter field coil
733F11186AA	SBU9004	Bushing
7355509	A0153	Alternator
7361230	A0117	Alternator
73AB11135AA	SBU9009	Bushing
74GB10316AA	ARE0001	Regulator
755F11000BB	S4007	Starter
76EB11135AA	SBU9008	Bushing
76EB11350AA	SD0001	Drive
77BB10316AA	ARE3017	Regulator
77EB11350AA	SD0001	Drive
78GB11061AA	SBH0001	S. Brush holder
78GB11135AA	SBU9011	Bushing
78GB11390AA	SS0053	Starter solenoid
78HB11167AA	SBU9015	Bushing
78HB11186AA	SBU9005	Bushing
78HB11350AA	SD0104	Drive
795F11000CA	S4007	Starter
79VB11350AA	SD0001	Drive
7G9N11000AB	S0096	Starter
7G9N11000AC	S0096	Starter
7H1211002AB	S0123	Starter
81AB10300UB	S9045	Starter
81AB11390BA	SS6006	Starter solenoid

FORD	AS	PRODUCT
81DB10316AA	ARE0001	Regulator
81DB10336AA	AS0002	Stator
81DB10336BA	AS0002	Stator
81DB11000BB	S0245	Starter
82BB10316AA	ARE0001	Regulator
82DB10300BB	S0245	Starter
82DB10336AA	AS0003	Stator
82DB11000BA	S0245	Starter
82DB11000BB	S0245	Starter
82DB11057AA	BSX134144	Sta. Brush set
82DB11057BA	BSX135145	Sta. Brush set
82DB11082BA	SF0004	Starter field coil
82DB11135AA	SBU9012	Bushing
82DB11350AA	SD0027	Drive
82FB10300EA	A4011	Alternator
82GB11005BA	SA0023	Starter armature
82GB11350BA	SD0023	Drive
835F11000AA	S4007	Starter
835F11000AC	S4007	Starter
835F11000BB	S4007	Starter
835FX11000BB	S4007	Starter
83BB11057AA	BSX137143	Sta. Brush set
83BB11061AA	SBH0001	S. Brush holder
83BB11135AA	SBU9012	Bushing
83BB11350A	SD0017	Drive
84AB11067AB	SL0001	Levers
84AB11135BA	SBU9009	Bushing
84AB11135CA	SBU9016	Bushing
84AB11135EA	SBU9013	Bushing
84AB11350AA	SD0039	Drive
84SF12K067BA	IM0001	Ignition Module
84VB11082AA	SF0006	Starter field coil
84VB11350BA	SD0021	Drive
85AB11000BA	S0247	Starter
85BB10300DA	A4011	Alternator
85BB11057AA	BSX140	Sta. Brush set
864F10304AA	ARC4005	Rectifier
86AA10300AAA	A4013	Alternator
86AB10300AA	A4013	Alternator
86AB10300AAA	A4013	Alternator
86AB10300NA	A4012	Alternator
86AB10300NB	A4012	Alternator
86AB10304AA	ARC0062	Rectifier
86AB10304BA	ARC4004	Rectifier
86AB10336AA	AS0004	Stator
86AB11000FA	S0247	Starter
86AB11000JA	S0247	Starter
86AB11000RA	S0247	Starter
86AB11000SA	S0247	Starter
86AB11000TA	S0247	Starter
86AB11000VA	S0247	Starter
86AX10300AB	A4011	Alternator
86AX10300DB	A4011	Alternator
86AX10300MB	A4012	Alternator
86BF12K062A	IM0001	Ignition Module
86BF12K062AA	IM0001	Ignition Module
87BB10300BA	A4011	Alternator
894X10300AE	A4001	Alternator
89AB11000AA	S0069	Starter
89AB11000BA	S0069	Starter
89FB11000AA	S0247	Starter
89FB11000BA	S0247	Starter
89FB11000CA	S0247	Starter
89FF10300AB	A4067	Alternator
89FF10300AC	A4067	Alternator
89FF10300EB	A4041	Alternator
89FF10300EC	A4041	Alternator
89FF10300JA	A4041	Alternator
89FF10300JB	A4041	Alternator
89FX10300EB	A4041	Alternator
89FX10300JA	A4041	Alternator
8V2111000BC	S0096	Starter
90AB11390BA	SS0025	Starter solenoid
91AB10300SA	A0152	Alternator
91AB11000BA	S0247	Starter
91AB11000BJ	S0247	Starter
91AB11000CA	S0247	Starter
91AB11000CB	S0247	Starter
91AB11000DA	S0247	Starter
91AB11000EA	S0247	Starter
91AB11000EB	S0069	Starter
91AB11000FB	S0069	Starter
91AB11000GA	S0069	Starter
91AB11000HA	S0161	Starter
91AB11000HB	S0161	Starter
91AB11000IA	S0247	Starter
91AB11000JA	S0247	Starter
91AB11000JB	S0247	Starter
91AB11000KA	S0247	Starter
91AB11000KB	S0247	Starter
91AB11000LA	S0247	Starter
91AB11000PA	S0069	Starter
91AX11000HA	S0161	Starter
91AX11000HB	S0161	Starter
91AX11000JA	S0247	Starter
91AX11000JB	S0247	Starter
91AX11000KB	S0247	Starter
91FF10300JA	A4019	Alternator
91FF10300JB	A4019	Alternator
91FF10300TA	A4041	Alternator
91FF10300VA	A4041	Alternator
91FX10300VA	A4041	Alternator
924F10300AA	A4001	Alternator
924F10300AB	A4001	Alternator
924F10K359AB	A4001	Alternator
924FX10K359AA	A4001	Alternator
924X10300AB	A4001	Alternator
92AB10300DD	A0152	Alternator
92AB10300FA	A0152	Alternator
92AB10300FB	A0152	Alternator
92AB11000CA	S0247	Starter
92AB11000HA	S0069	Starter
92AB11000HB	S0069	Starter
92AB11000KA	S0247	Starter
92AX11000HB	S0069	Starter
92AX11000JA	S0247	Starter
92FB10300FB	A0152	Alternator
93BB10300FC	A9003	Alternator
93BB10300FD	A9003	Alternator
93BB10300FE	A9003	Alternator
93BB10300FF	A9003	Alternator
93BB10300FG	A9003	Alternator
93BB11000AA	S0124	Starter
93BB11000AB	S0124	Starter
93BB11000BA	S9031	Starter
93BB11000BAA	S9031	Starter
93BB11000CA	S0158	Starter
93BB11000CB	S0158	Starter
93BB11000DB	S0158	Starter
93BB11000HB	S0124	Starter
93BB11000JB	S9031	Starter
93BB11000JC	S9031	Starter
93BB11000KA	S9015	Starter
93BB11000KB	S9015	Starter
93BB11000KC	S9015	Starter
93BB11000KD	S9015	Starter
94AB10300BA	A0148	Alternator
94FB10300AA	A0148	Alternator
94FB10300AB	A0148	Alternator
94GB10300BB	A4001	Alternator
94GB10K359AC	A4001	Alternator
954F10300AA	A4001	Alternator
954F10K300AA	A4001	Alternator
954F10K300AB	A4002	Alternator
954F10K359AA	A4002	Alternator
954F10K359AB	A4001	Alternator
95AB10300DB	A0153	Alternator
95AB10300DC	A0153	Alternator
95FB10300AA	A4080	Alternator
95FF10300AA	A4019	Alternator
95FF10300AB	A4019	Alternator
95FF10300AC	A4019	Alternator
95FF10300AD	A4019	Alternator
95GB10300LA	A4031	Alternator
95GB10300LB	A4031	Alternator
95GB10300MA	A4031	Alternator
95GB10300MB	A4031	Alternator
95VW10300AA	A0077	Alternator
95VW10300AAA	A0077	Alternator
95VW10300ABA	A0118	Alternator
95VW10300BAA	A0131	Alternator
95VW10300CA	A0127	Alternator
95VW10300FA	A0131	Alternator
95VW10300JA	A0129	Alternator
95VW10300KA	A0117	Alternator
95VW10300KB	A0117	Alternator
95VW10300NA	A0077	Alternator
95VW10300PA	A0176	Alternator
95VW10300RA	A0077	Alternator
95VW11000AA	S0033	Starter
95VW11000AB	S0033	Starter
95VW11000BC	S0027	Starter
95VW11000CB	S3025	Starter
95VW11000DA	S0146	Starter
95VW11000EB	S0006	Starter
95VW11000EC	S0006	Starter
95VW11000GA	S3025	Starter
96BB10300BA	A9002	Alternator
96BB10300BB	A9002	Alternator
96BB10300BE	A9002	Alternator
96BB11000AA	S0124	Starter
96FB10300AA	A0198	Alternator
96FB10300AB	A0198	Alternator
96FB10300DC	A0197	Alternator
96FB10300DD	A0197	Alternator
96FB10300DE	A0197	Alternator

FORD	AS	PRODUCT
96FB11000KB	S0096	Starter
96FB11000KC	S0096	Starter
96FB11000KD	S0096	Starter
96FF10300DB	A4005	Alternator
96FF10300DC	A4005	Alternator
97AB10300AA	A4005	Alternator
97AB10300AB	A4005	Alternator
97AB10300AC	A4005	Alternator
97AB10300AD	A4005	Alternator
97AB10300AE	A4005	Alternator
97BB10300BA	A9003	Alternator
97BB10300BB	A9003	Alternator
97BB10300BC	A9003	Alternator
97BB10300BD	A9003	Alternator
97BB11000B3D	S0161	Starter
97BB11000BB	S0161	Starter
97BB11000BC	S0069	Starter
97BB11000BD	S0161	Starter
97KB11000AB	S0157	Starter
97KB11000AC	S0157	Starter
97VB11000AA	S9001	Starter
97VB11000AB	S9001	Starter
97VW11000AA	S3025	Starter
97VW11000BA	S0006	Starter
988F12024AB	IC9003	Ignition Coil
988F12029AB	IC9003	Ignition Coil
988F12029AC	IC9003	Ignition Coil
988F12029AD	IC9003	Ignition Coil
988F12257AB	IC9003	Ignition Coil
98AB10300DC	A4028	Alternator
98AB10300DD	A4028	Alternator
98AB10300DE	A4028	Alternator
98AB10300DF	A4028	Alternator
98AB10300DG	A4028	Alternator
98AB10300DH	A4028	Alternator
98AB10300DJ	A4028	Alternator
98AB10300GC	A4035	Alternator
98AB10300GD	A4035	Alternator
98AB10300GE	A4035	Alternator
98AB10300GF	A4035	Alternator
98AB10300GG	A4035	Alternator
98AB10300GJ	A4035	Alternator
98AB10300GK	A4035	Alternator
98AB10300GL	A4035	Alternator
98AB10300GM	A4035	Alternator
98AB10300JA	A4021	Alternator
98AB10300JB	A4021	Alternator
98AB10300JC	A4021	Alternator
98AB10300JD	A4021	Alternator
98AB10300JE	A4021	Alternator
98AB10300JF	A4021	Alternator
98AB10300JG	A4021	Alternator
98AB11000AA	S9014	Starter
98AB11000AC	S0161	Starter
98AB11000AD	S0161	Starter
98AB11000AD1	S9014	Starter
98AB11000BB	S0096	Starter
98AB11000BC	S0096	Starter
98AB11000BD	S0096	Starter
98AB11000CB	S0096	Starter
98AB11000CC	S0096	Starter
98AB11000CD	S0096	Starter

FORD	AS	PRODUCT
98MF10300CA	A5033	Alternator
98MF10300CB	A5033	Alternator
98MF10300CC	A5033	Alternator
98VB10K359BA	A5002	Alternator
98VB10K359BB	A5002	Alternator
98VB10K359BC	A5002	Alternator
98VB11000AA	S9001	Starter
98VB11000AB	S9001	Starter
98VB11000B1A	S9001	Starter
98VB11000B3A	S9001	Starter
98VB11000B3B	S9001	Starter
98VW10300CA	A0127	Alternator
98VW10300EA	A0059	Alternator
9S5110346BA	A4058	Alternator
B6AZ11450A	SS9021	Starter solenoid
BD7T11450T	SS9021	Starter solenoid
BF9A11350VW	SD0077	Drive
BF9T11350AA	SD0117	Drive
BF9T11350AB	SD0151	Drive
BG320	ABH9001	A. Brush holder
C2DZ11350A	SD1003	Drive
C3DE11350A	SD1003	Drive
C3TS11390A	SS1014	Starter solenoid
C3TZ11390A	SS1014	Starter solenoid
C4TZ11390A	SS1004	Starter solenoid
C5AZ10304A	ARC9001	Rectifier
C6NF11000A	S9045	Starter
C6VF11135A	ABE9045	Bearing
C6VY11135A	ABE9045	Bearing
C7AF11450A	SS9021	Starter solenoid
C7NN11000A	S9045	Starter
C7NN11000B	S9045	Starter
C8DF11350A	SD1003	Drive
C8TZ11350B	SD1005	Drive
C8TZ11350D	SD1005	Drive
C9HE11350A	SD1003	Drive
C9WF11350C	SD1005	Drive
D0NN11000A	S9045	Starter
D0NN11000B	S9045	Starter
D1NN11000A	S9045	Starter
D20Z10304A	ARC9005	Rectifier
D2DZ11450A	SS9021	Starter solenoid
D2NN11000B	S9045	Starter
D2OZ10304A	ARC9005	Rectifier
D3VY10304A	ARC9006	Rectifier
D4HF11350AA	SD1005	Drive
D4HF11350BA	SD1003	Drive
D4NN10304A	ARC4010	Rectifier
D4NN11000B	S9045	Starter
D4VY10304A	ARC9007	Rectifier
D6AF11448AA	ABE9045	Bearing
D6AZ10304A	ARC9001	Rectifier
D6AZ11135A	ABE9045	Bearing
D6TZ11390A	SS1001	Starter solenoid
D7NN11000B	S9045	Starter
D8NN11000CA	S9045	Starter
D8NN11000CE	S9045	Starter
D9AZ11450A	SS9021	Starter solenoid
D9NN11000AA	S9045	Starter
D9VY10304A	ARC9002	Rectifier
DG474	IC9003	Ignition Coil
DGL74	IC9003	Ignition Coil

FORD	AS	PRODUCT
E02Z11390A	SS9001	Starter solenoid
E1HZ11390A	SS1014	Starter solenoid
E1HZ11390B	SS1004	Starter solenoid
E27Z10316A	ARE5001	Regulator
E2HZ10304A	ARC9006	Rectifier
E2HZ10304B	ARC9007	Rectifier
E3PZ11390A	SS1006	Starter solenoid
E3RZ11390A	SS9002	Starter solenoid
E3TZ11390A	SS5009	Starter solenoid
E43F10316A	ARE9009	Regulator
E43F10316AA	ARE9003	Regulator
E43X10316A	ARE9009	Regulator
E43Z10304A	ARC9009	Rectifier
E43Z10316A	ARE9003	Regulator
E43Z10316AA	ARE9009	Regulator
E43Z10316B	ARE9003	Regulator
E4FZ11135A	ABE9045	Bearing
E4FZ11390A	SS1006	Starter solenoid
E5DZ11350A	SD9016	Drive
E5PZ11005A	SA5007	Starter armature
E5PZ11135B	ABE9038	Bearing
E5PZ11390A	SS5015	Starter solenoid
E5RD10316AA	ARE0001	Regulator
E5RY10316A	ARE0001	Regulator
E63F10316A	ARE9009	Regulator
E63F10316AA	ARE9003	Regulator
E63F10316AB	ARE9003	Regulator
E6DZ10304	ARC9009	Rectifier
E6DZ10304A	ARC9009	Rectifier
E6HZ11390B	SS1005	Starter solenoid
E6HZ11390C	SS1005	Starter solenoid
E6TZ10316A	ARE9003	Regulator
E6YZ10316A	ARE9009	Regulator
E73F10316A	ARE9003	Regulator
E73F10316AB	ARE9003	Regulator
E73F10316AC	ARE9003	Regulator
E73Z10316A	ARE9003	Regulator
E7GZ10304A	ARC5002	Rectifier
E7GZ11061A	SBH5007	S. Brush holder
E7GZ11350A	SD5004	Drive
E7HZ11390B	SS1013	Starter solenoid
E7NN10304AA	ARC4002	Rectifier
E7RY10316A	ARE0001	Regulator
E8BZ11350A	SD5014	Drive
E8BZ212A297A	IM5001	Ignition Module
E8GY10304A	ARC5008	Rectifier
E8GY10304B	ARC5008	Rectifier
E8GY10316	ARE5004	Regulator
E8GY10316A	ARE5004	Regulator
E8GY10316B	ARE5011	Regulator
E8GZ10316A	ARE5011	Regulator
E8JY10316	ARE5004	Regulator
E8PZ10301B	ARC5021	Rectifier
E8PZ10301P	ARC5021	Rectifier
E8PZ10304A	ARC5023	Rectifier
E8PZ10304B	ARC5021	Rectifier
E8PZ10316A	ARE5028	Regulator
E8PZ10316B	ARE5027	Regulator
E8PZ10340A	ARC5023	Rectifier
E90F10328AA	ASL9011	Slip ring
E90Z11005A	SA9003	Starter armature
E90Z11061A	SBH9001	S. Brush holder

FORD	AS	PRODUCT
E90Z11061B	SBH9001	S. Brush holder
E90Z11061C	SBH9001	S. Brush holder
E90Z11067A	SL9001	Levers
E90Z11350A	SD9016	Drive
E90Z11390A	SS9001	Starter solenoid
E90Z11390B	SS9001	Starter solenoid
E90Z11A165A	SG9001	Starter gear
E92Z10304A	ARC5008	Rectifier
E92Z12A297A	IM5001	Ignition Module
E98Z10304A	ARC5004	Rectifier
E9D210316A	ARE9011	Regulator
E9DF10316AA	ARE9005	Regulator
E9DZ10304A	ARC9006	Rectifier
E9HT11001BA	S1021	Starter
E9HZ11002A	S1021	Starter
E9JY10316A	ARE0049	Regulator
E9OZ11005A	SA9003	Starter armature
E9OZ11061A	SBH9001	S. Brush holder
E9OZ11061B	SBH9001	S. Brush holder
E9OZ11061C	SBH9001	S. Brush holder
E9OZ11350A	SD9016	Drive
E9OZ11A165A	SG9001	Starter gear
E9PZ10304A	ARC5029	Rectifier
E9PZ10304B	ARC5037	Rectifier
E9ZZ12A297A	IM5001	Ignition Module
F0212A297A	IM5001	Ignition Module
F02Z10316A	ARE5015	Regulator
F02Z11390A	SS9001	Starter solenoid
F02Z12A297A	IM5001	Ignition Module
F0DU10316AA	ARE9005	Regulator
F0DZ10316A	ARE9005	Regulator
F0FZ11350A	SD1021	Drive
F0HZ10304A	ARC9007	Rectifier
F0JY10316A	ARE5018	Regulator
F0NN10B376BB	A4033	Alternator
F1CZ10316A	ARE5008	Regulator
F1DU10316AA	ARE9011	Regulator
F1DU10516A	ARE9005	Regulator
F1DU10516AA	ARE9005	Regulator
F1DU10576A	SRS0002	Repair set
F1DU10576AA	ARE9005	Regulator
F1DZ10347A	ABH9001	A. Brush holder
F1DZ10C359A	ARE9005	Regulator
F1TZ10346B	ARC9010	Rectifier
F2NN10B376AA	A4033	Alternator
F2PZ11005A	SA9003	Starter armature
F2VY11350A	SD9029	Drive
F3AU10316AA	ARE9004	Regulator
F3AZ10316A	ARE9004	Regulator
F3AZ10346A	ARE9004	Regulator
F3LY10304A	ARC5043	Rectifier
F3RU10316AA	ARE9004	Regulator
F3RZ11061A	SBH9001	S. Brush holder
F3RZ11350A	SD1019	Drive
F3RZ11390A	SS9002	Starter solenoid
F3RZ11390B	SS9002	Starter solenoid
F3VY11390A	SS9001	Starter solenoid
F3VY11390B	SS9001	Starter solenoid
F3XY10316A	ARE5020	Regulator
F4BZ11061A	SBH5007	S. Brush holder
F4BZ11350A	SD5004	Drive
F4BZ11350B	SD5014	Drive

FORD	AS	PRODUCT
F4DZ11390A	SS9001	Starter solenoid
F4TX11390A	SS5029	Starter solenoid
F4TZ11390A	SS5029	Starter solenoid
F4XY11390A	SS5026	Starter solenoid
F4ZU10316AA	ARE9012	Regulator
F4ZU10316AC	ARE9012	Regulator
F4ZZ10316A	ARE9012	Regulator
F50U100359AA	ARE9013	Regulator
F50U10316A	ARE9013	Regulator
F50Y10316A	ARE9013	Regulator
F5AZ10304AA	ARC9011	Rectifier
F5AZ10304BA	ARC9010	Rectifier
F5BU11350AA	SD4028	Drive
F5DU10316AA	ARE9011	Regulator
F5DZ11350A	SD9016	Drive
F5RU10300BB	A9002	Alternator
F5RU10300BC	A9002	Alternator
F5RU10313BA	ARE9010	Regulator
F5RU10316BA	ARE9010	Regulator
F5RU11350RA	SD1019	Drive
F5RZ10316A	ARE9010	Regulator
F5RZ10316B	ARE9010	Regulator
F6AZ10300A	ARE9010	Regulator
F6DU10C359AA	ARE9014	Regulator
F6DY10316A	ARE9014	Regulator
F6HT11001HA	S1016	Starter
F6HZ11002HA	S1016	Starter
F6RU10300AA	A9002	Alternator
F6VZ11390AA	SS9019	Starter solenoid
F75U11070AA	SL9001	Levers
F75Z11390AA	SS9020	Starter solenoid
F77U10316AA	ARE9011	Regulator
F78Z11390AA	SS9002	Starter solenoid
F7HT11001DA	S1016	Starter
F7HZ11002DA	S1016	Starter
F7RE11A165CA	SG9002	Starter gear
F7RE11Q165CA	SG9003	Starter gear
F7RU11000AA	S5037	Starter
F7RU11165CA	SG9001	Starter gear
F7RU11434BA	SBH9002	S. Brush holder
F7RU11A165CA	SG9002	Starter gear
F8AU10A366AAIP	ARC9015	Rectifier
F8RU10A366CAIP	ARC9014	Rectifier
F8WU10A336AA1P	ARC9013	Rectifier
F8WU10A366AAIP	ARC9013	Rectifier
F8WU10C359AB	ARE9015	Regulator
F8Z11390AA	SS9020	Starter solenoid
F8ZZ11390AA	SS9020	Starter solenoid
F8ZZ11390AB	SS9020	Starter solenoid
F8ZZ11390BA	SS9020	Starter solenoid
F90Z11350A	SD9016	Drive
GL331	ARC9012	Rectifier
GL594	A9033	Alternator
GR748B	ARE9009	Regulator
GR784B	ARE9009	Regulator
GR793	ARE9011	Regulator
GR821	ARE9011	Regulator
GRE521	ARE0001	Regulator
GRE786	ARE0001	Regulator
GRE790	ARE0001	Regulator

FORD	AS	PRODUCT
GRE799	ARE5015	Regulator
GRE802	ARE0049	Regulator
GRE805	ARE5018	Regulator
GY1026	ARC9005	Rectifier
GY1302	ARC9007	Rectifier
GYE1379	ARC5023	Rectifier
GYE1429	ARC5043	Rectifier
LK1S7T10300AA	A9033	Alternator
MC189A	ABE9045	Bearing
R2S7T11000DB	S9002	Starter
R835X11000AC	S4007	Starter
R86AX10300AAA	A4013	Alternator
R86AX10300AB	A4011	Alternator
R86AX10300MB	A4012	Alternator
R89FF10300EC	A4041	Alternator
R89FX10300GB	A4067	Alternator
R91FF10300JA	A4019	Alternator
R924F10300AA	A4002	Alternator
R924X10300AB	A4001	Alternator
R92AX11000JB	S0247	Starter
R93BB11000JB	S9031	Starter
R93BB11000JC	S9031	Starter
R93BB11000KC	S9015	Starter
R93BB11000KD	S9015	Starter
R94AB10300BA	A0148	Alternator
R954F10300AA	A4001	Alternator
R95AB10300DB	A0153	Alternator
R95FF10300AA	A4019	Alternator
R95FF10300AC	A4019	Alternator
R95GB10300MA	A4031	Alternator
R95GB10300MB	A4031	Alternator
R95VW10300ABA	A0118	Alternator
R95VW10300KB	A0117	Alternator
R95VW10300NA	A0077	Alternator
R96BB10300BA	A9002	Alternator
R96FB10300DD	A0197	Alternator
R96FB11000KC	S0096	Starter
R97AB10300AD	A4005	Alternator
R97AB10300AE	A4005	Alternator
R98VB11000B1A	S9001	Starter
RV87VG10300AB	A4014	Alternator
RV87VX10300AB	A4014	Alternator
RV94GB10300BB	A4001	Alternator
RYC1U11000AF	S9002	Starter
SA764A	S1021	Starter
SB331	SBH9001	S. Brush holder
SB335	SBH9001	S. Brush holder
SB337	SBH9001	S. Brush holder
SB348	SBH9001	S. Brush holder
SB353	SBH9001	S. Brush holder
SB356	SBH9001	S. Brush holder
SBE325	SBH5007	S. Brush holder
SBE334	SBH5007	S. Brush holder
SBE345	SBH5007	S. Brush holder
SD337	SD9016	Drive
SD340	SD1021	Drive
SD341	SD9029	Drive
SD353	SD1019	Drive
SD357	SD9016	Drive

FORD	AS	PRODUCT
SD499	SD2003	Drive
SDE332	SD5004	Drive
SDE334	SD5014	Drive
SDE349	SD5004	Drive
SDE350	SD5014	Drive
SM451	SA1003	Starter armature
SM475	SA9003	Starter armature
SM476	SG9001	Starter gear
SM482	SA9003	Starter armature
SW03	SS9021	Starter solenoid
SW1864	SS1006	Starter solenoid
SW2157	SS1013	Starter solenoid
SW2188	SS9001	Starter solenoid
SW2207	SS9001	Starter solenoid
SW2245	SS9001	Starter solenoid
SW2502	SS9001	Starter solenoid
SW2502A	SS9001	Starter solenoid
SW2506	SS9002	Starter solenoid
SW2507	SS9002	Starter solenoid
SW5038	SS9001	Starter solenoid
SW5112	SS9019	Starter solenoid
SW5189	SS9020	Starter solenoid
SW5203	SS9019	Starter solenoid
SW5204	SS9002	Starter solenoid
V86B11350AA	SD0014	Drive
V87VG10300AA	A4014	Alternator
V87VG10300AB	A4014	Alternator
V89AB10300AA	A4013	Alternator
V94GB10K359AC	A4001	Alternator
VP2C1U10A352AA	AFP9004	FW pulley
VP2C1U10A352BB	AFP9004	FW pulley
VP2M5U10A352AA	AFP9009	FW pulley
VP2PSU10A352BA	AFP9010	FW pulley
VP2PSU10A352CA	AFP9010	FW pulley
VP4L1U10C359AA	ARE9034	Regulator
VP6S4U10A352AA	AFP9009	FW pulley
XC1U11005AA	SA9001	Starter armature
XM3410300AA	A5020	Alternator
XM3410300BA	A5020	Alternator
XS6411350AA	SD1019	Drive
XS6U11000B4A	SA9011	Starter armature
XS6U11131BA	SA9011	Starter armature
XS6U11390AA	SS9002	Starter solenoid
XS7U10C359AC	ARE9016	Regulator
XS7U10C359BA	ARE9017	Regulator
XS7U11390A	SS9002	Starter solenoid
XS7U11390AA	SS9002	Starter solenoid
XS8212029AA	IC9003	Ignition Coil
XW4U10A352AA	AFP9003	FW pulley
XW4U10C359AB	ARE9033	Regulator
YC1010300DA	A0043	Alternator
YC1010300DB	A0043	Alternator
YC1T10300BC	A0043	Alternator
YC1T10300BD	A0043	Alternator
YC1T10300BE	A0043	Alternator
YC1T10300BG	A0043	Alternator
YC1T10300BH	A0043	Alternator

FORD	AS	PRODUCT
YC1T10300BJ	A0043	Alternator
YC1T10A352AC	AFP0013	FW pulley
YC1U10300DA	A0043	Alternator
YC1U10300DB	A0043	Alternator
YC1U10300EA	A9021	Alternator
YC1U10352BA	AFP9004	FW pulley
YC1U10A352BA	AFP0013	FW pulley
YC1U10A352BB	AFP9004	FW pulley
YC1U11000AB	S9002	Starter
YC1U11000AC	S9002	Starter
YC1U11000AD	S9002	Starter
YC1U11000AE	S9002	Starter
YC1U11000AF	S9002	Starter
YC1U11000AG	S9002	Starter
YM2110300AA	A0059	Alternator
YM2111000BA	S0248	Starter
YM2111000BB	S0248	Starter
YM2E10N356AA	AFP9003	FW pulley
YM2F12024AC	IC9003	Ignition Coil
YP2C10A352AA	AFP9004	FW pulley
YS4U11000AA	S0096	Starter
YS4U11000AB	S0096	Starter
YS4U11000AD	S0096	Starter
YS4U11000BA	S0096	Starter
YS4U11000BB	S0096	Starter
YS4U11000DA	S0158	Starter
YS4U11000DB	S0158	Starter
YS4U11000DC	S0158	Starter
YS4U11000DD	S0158	Starter
YS6110300BF	A4045	Alternator
YS6110300CA	A4046	Alternator
YS6110300CB	A4046	Alternator
YS6110300CC	A4046	Alternator
YS6110300DB	A4046	Alternator
YX8212029AA	IC9003	Ignition Coil

FRIESEN	AS	PRODUCT
8010430	S9057	Starter
8018410	S9058	Starter
8810990	S9044	Starter
8811020	S9043	Starter
8811140	S9044	Starter
8811200	S9044	Starter

FRIESSEN	AS	PRODUCT
9048620	A0229	Alternator

FUJI	AS	PRODUCT
JMTSX71	SB5003	Sta. Brush set

GHIBAUDI	AS	PRODUCT
0139	SD0114	Drive
10662	SG0019	Starter gear
1516	SD0050	Drive
1517	SD0026	Drive
1530	SD0040	Drive
1531	SD4009	Drive
1534	SD0089	Drive
1537	SD0023	Drive
1542	SD0039	Drive
1546	SD0004	Drive
1551	SD3004	Drive
1552	SD3005	Drive
1553	SD0021	Drive
1554	SD0051	Drive
1555	SD0012	Drive

GHIBAUDI	AS	PRODUCT
1556	SD0037	Drive
1558	SD9001	Drive
1560	SD4018	Drive
1562	SD0025	Drive
1564	SD0027	Drive
1567	SD4017	Drive
1574	SD4016	Drive
1578	SD4034	Drive
1581	SD3006	Drive
1588	SD2003	Drive
1590	SD5012	Drive
1593	SD0032	Drive
1594	SD0038	Drive
1596	SD4014	Drive
1597	SD4015	Drive
1598	SD2002	Drive
1599	SD2006	Drive
1608	SD0033	Drive
1612	SD0044	Drive
1616	SD0041	Drive
1617	SD0045	Drive
1618	SD0043	Drive
1619	SD3007	Drive
1621	SD0034	Drive
1629	SD5004	Drive
1641	SD0049	Drive
1642	SD0035	Drive
1647	SD0111	Drive
1653	SD0045	Drive
1655	SD0047	Drive
1659	SG0001	Starter gear
1660	SD4009	Drive
1661	SG0005	Starter gear
1663	SG0002	Starter gear
1664	SG0003	Starter gear
1667	SD4013	Drive
1668	SD0087	Drive
1669	SD5003	Drive
1676	SD5024	Drive
1678	SD5004	Drive
1680	SD6003	Drive
1683	SD6006	Drive
1684	SD6005	Drive
1688	SD3010	Drive
1691	SD0028	Drive
1702	SD9002	Drive
1703	SG0004	Starter gear
1705	SD6008	Drive
1711	SD5031	Drive
1716	SD2009	Drive
1720	SD0099	Drive
1721	SD3009	Drive
1722	SD6025	Drive
1725	SD2019	Drive
1733	SD6020	Drive
1737	SD2004	Drive
1747	SD4019	Drive
1748	SD5026	Drive
1751	SD0052	Drive
1754	SG0017	Starter gear
1761	SD5016	Drive
1773	SD0121	Drive

GHIBAUDI	AS	PRODUCT
1774	SD0053	Drive
1775	SD0024	Drive
1777	SD0094	Drive
1782	SD6012	Drive
1799	SD4020	Drive
1802	SD6007	Drive
1804	SG0008	Starter gear
1805	SG0009	Starter gear
1806	SG0009	Starter gear
1808	SD0056	Drive
1810	SD0153	Drive
1814	SD4035	Drive
1822	SD2016	Drive
1824	SD0055	Drive
1825	SD9012	Drive
1832	SD5027	Drive
1834	SD0068	Drive
1835	SD0058	Drive
1836	SD0059	Drive
1837	SD0067	Drive
1848	SD5005	Drive
1849	SD6004	Drive
1853	SD2023	Drive
1856	SD0025	Drive
1863	SD3011	Drive
1864	SD0060	Drive
1877	SD0061	Drive
1879	SD0037	Drive
1882	SD0047	Drive
1884	SD3012	Drive
1885	SG3006	Starter gear
1886	SD0057	Drive
1887	SD0063	Drive
1889	SD4021	Drive
1894	SD0062	Drive
1895	SD5013	Drive
1896	SD5015	Drive
1904	SD2010	Drive
1906	SG0018	Starter gear
1908	SG0020	Starter gear
1910	SD4022	Drive
1918	SD0064	Drive
1920	SD2015	Drive
1925	SG0016	Starter gear
1929	SD4023	Drive
1941	SD0082	Drive
1944	SD5020	Drive
1953	SD3013	Drive
1960	SD4024	Drive
1961	SD0124	Drive
1962	SD0140	Drive
1963	SD6019	Drive
1972	SD0018	Drive
1989	SD0071	Drive
1991	SD0066	Drive
1998	SD3014	Drive
1999	SD3015	Drive
2006	SD0070	Drive
2013	SD4002	Drive
2019	SD0034	Drive
2026	SD3016	Drive
2028	SD0075	Drive
2030	SD0052	Drive
2031	SD4016	Drive
2034	SD6009	Drive
2036	SD0081	Drive
2037	SD5030	Drive
2044	SD6026	Drive
2048	SD0107	Drive
2051	SD0089	Drive
2054	SD4026	Drive
2056	SD5018	Drive
2058	SD0069	Drive
2059	SD0072	Drive
2061	SD6027	Drive
2062	SD6028	Drive
2064	SD3018	Drive
2065	SD9005	Drive
2069	SD5023	Drive
2072	SD2013	Drive
2074	SD4027	Drive
2079	SD3021	Drive
2090	SD4030	Drive
2092	SD4032	Drive
2094	SD4031	Drive
2099	SD4025	Drive
2105	SD4028	Drive
2106	SD0113	Drive
2108	SD0091	Drive
2109	SD0092	Drive
2110	SD0154	Drive
2111	SD0088	Drive
2115	SD1019	Drive
2118	SD5006	Drive
2122	SD0095	Drive
2126	SD0080	Drive
2130	SD3022	Drive
2132	SD0145	Drive
2133	SD0093	Drive
2134	SD0065	Drive
2137	SD0078	Drive
2138	SD0076	Drive
2142	SD3019	Drive
2143	SD2020	Drive
2145	SD0115	Drive
2149	SD0073	Drive
2152	SD0096	Drive
2153	SD4039	Drive
2160	SD6015	Drive
2162	SD5034	Drive
2164	SD0116	Drive
2165	SD0079	Drive
2167	SD0029	Drive
2169	SD0097	Drive
2176	SD2014	Drive
2179	SD4033	Drive
2189	SD0100	Drive
2190	SD0074	Drive
2196	SD1011	Drive
2197	SD5021	Drive
2198	SD5029	Drive
2200	SD0098	Drive
2201	SD0108	Drive
2202	SD0112	Drive
2203	SD0101	Drive
2204	SD0083	Drive
2206	SD0130	Drive
2207	SD3020	Drive
2216	SD3025	Drive
2217	SD1003	Drive
2221	SD1015	Drive
2223	SD1005	Drive
2232	SD0109	Drive
2234	SD0102	Drive
2236	SD0129	Drive
2238	SD0126	Drive
2239	SD0103	Drive
2241	SD0131	Drive
2244	SD3027	Drive
2245	SD9007	Drive
2247	SD0084	Drive
2249	SD5022	Drive
2251	SD2011	Drive
2256	SD0123	Drive
2257	SD0141	Drive
2258	SD3029	Drive
2259	SD3017	Drive
2260	SD9008	Drive
2263	SD0142	Drive
2266	SD0136	Drive
2267	SD0138	Drive
2275	SD9016	Drive
2276	SD1007	Drive
2277	SD6013	Drive
2284	SD5032	Drive
2285	SD5033	Drive
2291	SD0125	Drive
2292	SD0122	Drive
2296	SD0148	Drive
2321	SD9017	Drive
2323	SG0023	Starter gear
2332	SD6029	Drive
2336	SD3031	Drive
2338	SD0137	Drive
2340	SD6018	Drive
2343	SD0120	Drive
2346	SD5035	Drive
2347	SD0132	Drive
2351	SD0150	Drive
2354	SD0149	Drive
2362	SD9029	Drive
2376	SD9017	Drive
2377	SD3028	Drive
2391	SD4040	Drive
2672	SD3003	Drive
2674	SD4004	Drive
2760	SD0048	Drive
2809	SD0139	Drive
2830	SD0002	Drive
2831	SD4003	Drive
2841	SD6001	Drive
2847	SD0152	Drive
2851	SD4001	Drive
2852	SD4036	Drive
2856	SD0018	Drive
2866	SD0105	Drive

GHIBAUDI	AS	PRODUCT
2868	SD0009	Drive
2895	SD0030	Drive
2904	SD1001	Drive
2907	SD4002	Drive
2913	SD0019	Drive
2921	SD0001	Drive
2922	SD0042	Drive
2925	SD6002	Drive
2927	SD5001	Drive
2930	SD4037	Drive
2932	SD4008	Drive
2934	SD0118	Drive
2936	SD0008	Drive
2946	SD0002	Drive
2959	SD0106	Drive
2974	SD0031	Drive
2997	SD0004	Drive
3001	SD0048	Drive
3017	SD0003	Drive
3018	SD0007	Drive
3024	SD4029	Drive
3039	SD0010	Drive
3040	SD4005	Drive
3067	SD2017	Drive
3068	SD4038	Drive
3075	SD5010	Drive
3090	SD4005	Drive
3099	SD4010	Drive
3120	SD4006	Drive
3125	SD2018	Drive
3149	SD3002	Drive
3150	SD0011	Drive
3154	SD0012	Drive
3158	SD3001	Drive
3160	SD4007	Drive
3165	SD0022	Drive
3166	SD0016	Drive
3167	SD5002	Drive
3168	SD4011	Drive
3172	SD0013	Drive
3174	SD4012	Drive
3189	SD0054	Drive
3190	SD0014	Drive
3194	SD0017	Drive
3196	SD0020	Drive
3198	SD3008	Drive
3199	SD0036	Drive
3217	SD2001	Drive
3315	SD0006	Drive
3317	SD0005	Drive
3332	SD0015	Drive
3346	SD0006	Drive
3451	SG0006	Starter gear
3452	SG0007	Starter gear
3466	SG0010	Starter gear
3472	SG0012	Starter gear
3474	SG0014	Starter gear
3479	SG0015	Starter gear
3488	SG0011	Starter gear
3539	SD0104	Drive
3601	SBU9014	Bushing
3640	SBU9023	Bushing

GHIBAUDI	AS	PRODUCT
3641	SBU9024	Bushing
3642	SBU9025	Bushing
3643	SBU9026	Bushing
3651	SBU9001	Bushing
3654	SBU9004	Bushing
3660	SBU9003	Bushing
3662	SBU9006	Bushing
3665	SBU9001	Bushing
3666	SBU9008	Bushing
3680	SBU9005	Bushing
3681	SBU9015	Bushing
3682	SBU9007	Bushing
3700	SBU9002	Bushing
3702	SBU9007	Bushing
3704	SBU9011	Bushing
3707	SBU9009	Bushing
3709	SBU9012	Bushing
3710	SBU9010	Bushing
3711	SBU9013	Bushing
3715	SBU9016	Bushing
3716	SBU9019	Bushing
3717	SBU9017	Bushing
3718	SBU9018	Bushing
3719	SBU9020	Bushing
3720	SBU9021	Bushing
3724	SBU9033	Bushing
3725	SBU9020	Bushing
3797	SBU9022	Bushing
3830	SBU9029	Bushing
3843	SBU9028	Bushing
4058	SBU9037	Bushing
4113	SBU9031	Bushing
4116	SBU9032	Bushing
4151	SBU9047	Bushing
4206	SG0019	Starter gear
4509K	SBU9027	Bushing
5000K	SDK0005	Dust Cover Kits
6024	SD5038	Drive

H&B	AS	PRODUCT
42263570	S9051	Starter

HALLA	AS	PRODUCT
HAB170140	A5036	Alternator
HAB170140N	A5036	Alternator
HAB175160	A9010	Alternator
HAB190120	A5027	Alternator
HAB190140	A9005	Alternator
HAD165500	A5006	Alternator
HAD165504	A5018	Alternator
HAD165520	A2002	Alternator
HAD225501	A5007	Alternator
HSC107100	S5002	Starter
HSG120500	S5005	Starter
HSG232500	S5008	Starter
HSP112110	S5020	Starter
HSP112160	S3053	Starter

HATZ	AS	PRODUCT
50353510	S0211	Starter
50353511	S0211	Starter

HC PARTS	AS	PRODUCT
CA180	A0184	Alternator
CA721	A3099R	Alternator
CA76IR	A0004	Alternator

HC PARTS	AS	PRODUCT
CA77IR	A0012	Alternator
CA87IR	A0069	Alternator
CA132IR	A0099	Alternator
CA165IR	A3045	Alternator
CA186IR	A0020	Alternator
CA187IR	A0017	Alternator
CA212IR	A4029	Alternator
CA227IR	A0058	Alternator
CA229IR	A3046	Alternator
CA240IR	A0087	Alternator
CA252IR	A4059	Alternator
CA291IR	A3013	Alternator
CA298IR	A0028	Alternator
CA301IR	A3047	Alternator
CA305IR	A4011	Alternator
CA307IR	A4081	Alternator
CA314IR	A3001	Alternator
CA316IR	A4039	Alternator
CA318IR	A0093	Alternator
CA319IR	A0141	Alternator
CA320IR	A0094	Alternator
CA324IR	A0110	Alternator
CA325IR	A4012	Alternator
CA328IR	A0103	Alternator
CA333IR	A0001	Alternator
CA335IR	A0015	Alternator
CA339IR	A0014	Alternator
CA340IR	A0084	Alternator
CA341IR	A0030	Alternator
CA345IR	A0031	Alternator
CA350IR	A4063	Alternator
CA353IR	A0134	Alternator
CA364IR	A0092	Alternator
CA366IR	A0055	Alternator
CA367IR	A0098	Alternator
CA368IR	A0102	Alternator
CA370IR	A3049	Alternator
CA372IR	A3048	Alternator
CA378IR	A3007	Alternator
CA380IR	A3012	Alternator
CA381IR	A0104	Alternator
CA500IR	A0009	Alternator
CA501IR	A0203	Alternator
CA502IR	A0109	Alternator
CA503IR	A0070	Alternator
CA506IR	A4065	Alternator
CA516IR	A0115	Alternator
CA518IR	A0108	Alternator
CA526IR	A3002	Alternator
CA533IR	A3005	Alternator
CA535IR	A3044	Alternator
CA549IR	A3006	Alternator
CA550IR	A0026	Alternator
CA557IR	A3009	Alternator
CA560IR	A4013	Alternator
CA561IR	A4067	Alternator
CA568IR	A0097	Alternator
CA569IR	A0107	Alternator
CA572IR	A4063	Alternator
CA574IR	A3004	Alternator
CA593IR	A0179	Alternator
CA595IR	A0101	Alternator

HC PARTS	AS	PRODUCT
CA596IR	A4044	Alternator
CA601IR	A4065	Alternator
CA602IR	A3003	Alternator
CA605IR	A3011	Alternator
CA610IR	A0106	Alternator
CA616IR	A4009	Alternator
CA618IR	A3020	Alternator
CA619IR	A0086	Alternator
CA634IR	A3026	Alternator
CA635IR	A3008	Alternator
CA637IR	A3015	Alternator
CA639IR	A3021	Alternator
CA642IR	A4030	Alternator
CA649IR	A3050	Alternator
CA650IR	A4014	Alternator
CA700IR	A0111	Alternator
CA702IR	A0088	Alternator
CA708IR	A0105	Alternator
CA717IR	A4041	Alternator
CA719IR	A4001	Alternator
CA721IR	A3099R	Alternator
CA722IR	A0100	Alternator
CA730IR	A3039	Alternator
CA733IR	A0202	Alternator
CA734IR	A0013	Alternator
CA736IR	A0077	Alternator
CA738IR	A0152	Alternator
CA740IR	A0006	Alternator
CA817IR	A3038	Alternator
CA820IR	A3016	Alternator
CA822IR	A4051	Alternator
CA825IR	A3057	Alternator
CA827IR	A0131	Alternator
CA828IR	A0048	Alternator
CA829IR	A0078	Alternator
CA830IR	A3043	Alternator
CA831IR	A3025	Alternator
CA837IR	A3064	Alternator
CA838IR	A3014	Alternator
CA842IR	A0095	Alternator
CA843IR	A0096	Alternator
CA845IR	A3075	Alternator
CA849IR	A3010	Alternator
CA850IR	A9015	Alternator
CA851IR	A4018	Alternator
CA853IR	A0010	Alternator
CA854IR	A0016	Alternator
CA857IR	A3060	Alternator
CA858IR	A3061	Alternator
CA889IR	A4008	Alternator
CA890IR	A4003	Alternator
CA891IR	A4033	Alternator
CA893IR	A4047	Alternator
CA898IR	A3100R	Alternator
CA907IR	A0008	Alternator
CA910IR	A0091	Alternator
CA911IR	A0090	Alternator
CA1031IR	A4002	Alternator
CA1032IR	A0148	Alternator
CA1034IR	A9003	Alternator
CA1035IR	A0002	Alternator
CA1037IR	A0153	Alternator
CA1038IR	A3029	Alternator
CA1039IR	A3019	Alternator
CA1043IR	A0163	Alternator
CA1044IR	A0005	Alternator
CA1045IR	A0116	Alternator
CA1047IR	A9030R	Alternator
CA1049IR	A3059	Alternator
CA1050IR	A4010	Alternator
CA1053IR	A1001	Alternator
CA1062IR	A0114	Alternator
CA1064IR	A3062	Alternator
CA1065IR	A3022	Alternator
CA1068IR	A0089	Alternator
CA1070IR	A1012	Alternator
CA1080IR	A3031	Alternator
CA1083IR	A4019	Alternator
CA1084IR	A4007	Alternator
CA1085IR	A4031	Alternator
CA1087IR	A0197	Alternator
CA1089IR	A0118	Alternator
CA1092IR	A0156	Alternator
CA1095IR	A3040	Alternator
CA1098IR	A3096	Alternator
CA1100IR	A4079	Alternator
CA1103IR	A1010	Alternator
CA1139IR	A3081	Alternator
CA1142IR	A0117	Alternator
CA1147IR	A0151	Alternator
CA1148IR	A0029	Alternator
CA1150IR	A3076	Alternator
CA1152IR	A0081	Alternator
CA1154IR	A4069	Alternator
CA1156IR	A3095	Alternator
CA1157IR	A3041	Alternator
CA1160IR	A4017	Alternator
CA1161IR	A4016	Alternator
CA1189IR	A4024	Alternator
CA1191IR	A4032	Alternator
CA1192IR	A3042	Alternator
CA1197IR	A0018	Alternator
CA1198IR	A0082	Alternator
CA1199IR	A4049	Alternator
CA1204IR	A0177	Alternator
CA1208IR	A4027	Alternator
CA1216IR	A4025	Alternator
CA1217IR	A4005	Alternator
CA1219IR	A4057	Alternator
CA1220IR	A4004	Alternator
CA1221IR	A4060	Alternator
CA1223IR	A4023	Alternator
CA1226IR	A0128	Alternator
CA1228IR	A0019	Alternator
CA1229IR	A0186	Alternator
CA1236IR	A0021	Alternator
CA1237IR	A0022	Alternator
CA1240IR	A0080	Alternator
CA1243IR	A3024	Alternator
CA1246IR	A0113	Alternator
CA1247IR	A3066	Alternator
CA1252IR	A4026	Alternator
CA1253IR	A1014	Alternator
CA1256IR	A0157	Alternator
CA1258IR	A4006	Alternator
CA1261IR	A0161	Alternator
CA1262IR	A0130	Alternator
CA1265IR	A0079	Alternator
CA1269IR	A0129	Alternator
CA1300IR	A0173	Alternator
CA1301IR	A0172	Alternator
CA1303IR	A3092	Alternator
CA1304IR	A3028	Alternator
CA1305IR	A4052	Alternator
CA1307IR	A3090	Alternator
CA1308IR	A3088	Alternator
CA1309IR	A3089	Alternator
CA1310IR	A3018	Alternator
CA1316IR	A9002	Alternator
CA1317IR	A5002	Alternator
CA1318IR	A4020	Alternator
CA1328IR	A0174	Alternator
CA1330IR	A4040	Alternator
CA1331IR	A3091	Alternator
CA1335IR	A0135	Alternator
CA1336IR	A0023	Alternator
CA1337IR	A4055	Alternator
CA1340IR	A4035	Alternator
CA1341IR	A0176	Alternator
CA1342IR	A3058	Alternator
CA1349IR	A4075	Alternator
CA1378IR	A0027	Alternator
CA1379IR	A4033	Alternator
CA1381IR	A0112	Alternator
CA1385IR	A1013	Alternator
CA1386IR	A1003	Alternator
CA1390IR	A3082	Alternator
CA1394IR	A0059	Alternator
CA1395IR	A0133	Alternator
CA1396IR	A1002	Alternator
CA1399IR	A0119	Alternator
CA1400IR	A3065	Alternator
CA1402IR	A0040	Alternator
CA1403IR	A0178	Alternator
CA1434IR	A3111	Alternator
CA1435IR	A4065	Alternator
CA1438IR	A0025	Alternator
CA1439IR	A0061	Alternator
CA1443IR	A0060	Alternator
CA1444IR	A3079	Alternator
CA1445IR	A0036	Alternator
CA1446IR	A0127	Alternator
CA1455IR	A9015	Alternator
CA1457IR	A4036	Alternator
CA1468IR	A4037	Alternator
CA1470IR	A0044	Alternator
CA1471IR	A0140	Alternator
CA1473IR	A1009	Alternator
CA1474IR	A5033	Alternator
CA1475IR	A4021	Alternator
CA1477IR	A0003	Alternator
CA1481IR	A0035	Alternator
CA1483IR	A4028	Alternator
CA1486IR	A0041	Alternator
CA1488IR	A4064	Alternator
CA1489IR	A0032	Alternator

HC PARTS	AS	PRODUCT
CA1491IR	A0054	Alternator
CA1495IR	A3036	Alternator
CA1496IR	A3017	Alternator
CA1498IR	A3032	Alternator
CA1500IR	A0187	Alternator
CA1505IR	A0011	Alternator
CA1507IR	A0051	Alternator
CA1508IR	A4080	Alternator
CA1509IR	A3027	Alternator
CA1511IR	A0125	Alternator
CA1512IR	A0037	Alternator
CA1541IR	A0046	Alternator
CA1542IR	A0042	Alternator
CA1544IR	A0145	Alternator
CA1546IR	A0050	Alternator
CA1549IR	A0189	Alternator
CA1550IR	A4066	Alternator
CA1552IR	A0198	Alternator
CA1553IR	A3051	Alternator
CA1556IR	A0033	Alternator
CA1557IR	A0149	Alternator
CA1558IR	A4043	Alternator
CA1559IR	A3072	Alternator
CA1560IR	A0188	Alternator
CA1564IR	A3023	Alternator
CA1565IR	A4053	Alternator
CA1567IR	A0056	Alternator
CA1569IR	A0162	Alternator
CA1572IR	A3073	Alternator
CA1574IR	A3030	Alternator
CA1576IR	A0057	Alternator
CA1577IR	A0052	Alternator
CA1581IR	A1011	Alternator
CA1582IR	A0171	Alternator
CA1584IR	A3094	Alternator
CA1586IR	A0158	Alternator
CA1587IR	A0038	Alternator
CA1588IR	A0045	Alternator
CA1591IR	A0071	Alternator
CA1592IR	A0121	Alternator
CA1593IR	A0007	Alternator
CA1625IR	A4061	Alternator
CA1626IR	A9034	Alternator
CA1627IR	A3037	Alternator
CA1628IR	A0044	Alternator
CA1630IR	A0169	Alternator
CA1632IR	A0226	Starter
CA1633IR	A0136	Alternator
CA1634IR	A0205R	Alternator
CA1635IR	A9016	Alternator
CA1636IR	A0068	Alternator
CA1638IR	A9011	Alternator
CA1639IR	A0043	Alternator
CA1640IR	A4076	Alternator
CA1642IR	A3069	Alternator
CA1643IR	A3053	Alternator
CA1645IR	A3035	Alternator
CA1648IR	A0191	Alternator
CA1649IR	A4045	Alternator
CA1651IR	A4054	Alternator
CA1652IR	A5009	Alternator
CA1653IR	A3077	Alternator
CA1654IR	A0216	Alternator
CA1656IR	A0206	Alternator
CA1660IR	A0217	Alternator
CA1662IR	A3063	Alternator
CA1663IR	A0073	Alternator
CA1664IR	A3054	Alternator
CA1665IR	A3032	Alternator
CA1666IR	A0034	Alternator
CA1671IR	A1004	Alternator
CA1672IR	A1005	Alternator
CA1673IR	A0049	Alternator
CA1674IR	A3074	Alternator
CA1675IR	A3101	Alternator
CA1676IR	A6036	Alternator
CA1677IR	A1016R	Alternator
CA1678IR	A3033	Alternator
CA1679IR	A0075	Alternator
CA1680IR	A3085R	Alternator
CA1681IR	A3056	Alternator
CA1683IR	A0196	Alternator
CA1687IR	A5024	Alternator
CA1689IR	A0144	Alternator
CA1693IR	A0122	Alternator
CA1694IR	A0120	Alternator
CA1695IR	A0175	Alternator
CA1697IR	A4077	Alternator
CA1698IR	A4034	Alternator
CA1699IR	A0074	Alternator
CA1701IR	A0218	Alternator
CA1731IR	A0219	Alternator
CA1734IR	A4062	Alternator
CA1736IR	A0085	Alternator
CA1737IR	A5034	Alternator
CA1739IR	A0053	Alternator
CA1740IR	A0047	Alternator
CA1741IR	A5023	Alternator
CA1742IR	A4058	Alternator
CA1747IR	A0225	Alternator
CA1750IR	A3083	Alternator
CA1753IR	A4056	Alternator
CA1754IR	A0195	Alternator
CA1755IR	A3102	Alternator
CA1756IR	A3087	Alternator
CA1757IR	A3070	Alternator
CA1758IR	A9023	Alternator
CA1759IR	A0143	Alternator
CA1760IR	A4046	Alternator
CA1761IR	A0142	Alternator
CA1762IR	A3052	Alternator
CA1764IR	A0201R	Alternator
CA1765IR	A0066	Alternator
CA1766IR	A4058	Alternator
CA1767IR	A3084R	Alternator
CA1768IR	A3068	Alternator
CA1769IR	A0076	Alternator
CA1772IR	A4046	Alternator
CA1773IR	A0220	Alternator
CA1775IR	A0208	Alternator
CA1776IR	A0194	Alternator
CA1777IR	A9020	Alternator
CA1778IR	A3105	Alternator
CA1779IR	A9021	Alternator
CA1780IR	A5029	Alternator
CA1782IR	A0190	Alternator
CA1810IR	A3097	Alternator
CA1812IR	A0072	Alternator
CA1813IR	A0160	Alternator
CA1814IR	A3034	Alternator
CA1815IR	A0039	Alternator
CA1817IR	A0181	Alternator
CA1818IR	A0180	Alternator
CA1819IR	A0170	Alternator
CA1821IR	A0154	Alternator
CA1823IR	A0166	Alternator
CA1824IR	A0164	Alternator
CA1825IR	A0221	Alternator
CA1827IR	A0165	Alternator
CA1828IR	A0209	Alternator
CA1832IR	A5024	Alternator
CA1834IR	A6018	Alternator
CA1836IR	A3071	Alternator
CA1837IR	A0147	Alternator
CA1838IR	A1015R	Alternator
CA1840IR	A0207	Alternator
CA1846IR	A0199	Alternator
CA1847IR	A0192	Alternator
CA1850IR	A3067	Alternator
CA1851IR	A0124	Alternator
CA1852IR	A5035	Alternator
CA1853IR	A0123	Alternator
CA1854IR	A0228	Alternator
CA1855IR	A3078	Alternator
CA1856IR	A3104	Alternator
CA1857IR	A9012	Alternator
CA1859IR	A0222	Alternator
CA1860IR	A0213	Alternator
CA1861IR	A0146	Alternator
CA1862IR	A3055	Alternator
CA1863IR	A0167	Alternator
CA1864IR	A6011	Alternator
CA1865IR	A6010	Alternator
CA1867IR	A0159	Alternator
CA1868IR	A0210	Alternator
CA1869IR	A6034	Alternator
CA1870IR	A0193	Alternator
CA1871IR	A0062	Alternator
CA1872IR	A0067	Alternator
CA1876IR	A0168	Alternator
CA1880IR	A0064	Alternator
CA1883IR	A0063	Alternator
CA1884IR	A4042	Alternator
CA1885IR	A4073	Alternator
CA1886IR	A4072	Alternator
CA1888IR	A0204	Alternator
CA1890IR	A4048	Alternator
CA1905IR	A3098R	Alternator
CA1907IR	A0224	Alternator
CA1911IR	A3080	Alternator
CA1914IR	A0183	Alternator
CA1915IR	A0150	Alternator
CA1917IR	A0211	Alternator
CA1926IR	A6019	Alternator
CA1928IR	A0200	Alternator
CA1941IR	A6026	Alternator

HC PARTS	AS	PRODUCT
CA1949IR	A4084	Alternator
CA1950IR	A6007	Alternator
CA1952IR	A4082	Alternator
CA1956IR	A4070	Alternator
CA1964IR	A6038	Alternator
CA1969IR	A4083	Alternator
CA1975IR	A3103	Alternator
CA1976IR	A3106	Alternator
CA1978IR	A4085	Alternator
CA1987IR	A4071	Alternator
CA1989IR	A4068	Alternator
CA1994IR	A0215	Alternator
CA1999IR	A6026	Alternator
CA2021IR	A6039	Alternator
CA2023IR	A9036	Alternator
CA2024IR	A0223	Alternator
CA2040IR	A0136	Alternator
CS62	S0046	Starter
CS90	S4033	Starter
CS97	S0197	Starter
CS103	S0115	Starter
CS107	S4002	Starter
CS109	S4018	Starter
CS113	S0219(BOSCH)R	Starter
CS114	S0115	Starter
CS120	S0002	Starter
CS121	S0220(BOSCH)R	Starter
CS139	S0128	Starter
CS156	S9057	Starter
CS162	S1013	Starter
CS186	S0067	Starter
CS191	S0001	Starter
CS194	S0151	Starter
CS198	S0003	Starter
CS200	S4004	Starter
CS201	S4005	Starter
CS230	S4037(MM)R	Starter
CS231	S4021	Starter
CS232	S0118	Starter
CS240	S0116	Starter
CS269	S0041	Starter
CS282	S0015	Starter
CS289	S4036(MM)R	Starter
CS294	S0072	Starter
CS295	S0045	Starter
CS297	S0050	Starter
CS298	S0077	Starter
CS310	S3015	Starter
CS315	S3014	Starter
CS322	S0217	Starter
CS326	S0004	Starter
CS331	S0016	Starter
CS332	S9008	Starter
CS335	S0114	Starter
CS336	S4006	Starter
CS337	S4007	Starter
CS338	S0183	Starter
CS341	S0069	Starter
CS345	S4008	Starter
CS350	S0047	Starter
CS351	S0132	Starter
CS358	S0014	Starter
CS360	S0029	Starter
CS361	S0236	Starter
CS370	S0127	Starter
CS371	S4039	Starter
CS372	S0034	Starter
CS373	S0084	Starter
CS376	S0204	Starter
CS377	S0052	Starter
CS384	S0011	Starter
CS386	S0043	Starter
CS388	S0235	Starter
CS389	S0055	Starter
CS390	S3005	Starter
CS391	S0107	Starter
CS394	S0092	Starter
CS395	S0117	Starter
CS500	S0187	Starter
CS501	S0145	Starter
CS502	S0221(BOSCH)R	Starter
CS503	S9046	Starter
CS504	S0133	Starter
CS506	S0216	Starter
CS507	S0205	Starter
CS510	S0148	Starter
CS516	S0044	Starter
CS519	S1014	Starter
CS530	S0068	Starter
CS544	S0063	Starter
CS550	S9043	Starter
CS551	S3031	Starter
CS559	S0190R	Starter
CS564	S0008	Starter
CS566	S3009	Starter
CS572	S0152	Starter
CS576	S0144	Starter
CS581	S3010	Starter
CS583	S0051	Starter
CS590	S4009	Starter
CS592	S0247	Starter
CS594	S3002	Starter
CS595	S0040	Starter
CS597	S0131	Starter
CS599	S0142	Starter
CS601	S0083	Starter
CS604	S4010	Starter
CS606	S0038	Starter
CS608	S0075	Starter
CS610	S0103	Starter
CS611	S0166	Starter
CS612	S0054	Starter
CS613	S0161	Starter
CS615	S0057	Starter
CS617	S0023	Starter
CS618	S0062	Starter
CS619	S0033	Starter
CS620	S0146	Starter
CS621	S3054	Starter
CS624	S0039	Starter
CS680	S0059	Starter
CS681	S3004	Starter
CS682	S0110	Starter
CS683	S0077	Starter
CS684	S3001	Starter
CS688	S0022	Starter
CS689	S0111	Starter
CS693	S4011	Starter
CS701	S4012	Starter
CS703	S4013	Starter
CS705	S4014	Starter
CS706	S0112	Starter
CS710	S0007	Starter
CS718	S0113	Starter
CS719	S0124	Starter
CS725	S0030	Starter
CS727	S0126	Starter
CS784	S3052	Starter
CS788	S4016	Starter
CS789	S0006	Starter
CS790	S0158	Starter
CS791	S3011	Starter
CS796	S4022	Starter
CS798	S9010	Starter
CS801	S0005	Starter
CS805	S0134	Starter
CS807	S3045	Starter
CS878	S0056	Starter
CS879	S0098	Starter
CS880	S0104	Starter
CS881	S0065	Starter
CS885	S0017	Starter
CS886	S3013	Starter
CS887	S0174	Starter
CS944	S9024	Starter
CS950	S9067	Starter
CS954	S0009	Starter
CS961	S9015	Starter
CS962	S0021	Starter
CS973	S0064	Starter
CS974	S0025	Starter
CS975	S4020	Starter
CS976	S0036	Starter
CS977	S9001	Starter
CS979	S0058	Starter
CS981	S4015	Starter
CS983	S3047	Starter
CS984	S0093	Starter
CS986	S0157	Starter
CS988	S0094	Starter
CS989	S0196	Starter
CS990	S0028	Starter
CS991	S3050	Starter
CS994	S4019	Starter
CS996	S0164	Starter
CS1032	S4001	Starter
CS1033	S9021	Starter
CS1035	S3042	Starter
CS1036	S0031	Starter
CS1037	S0105	Starter
CS1038	S4033	Starter
CS1040	S0010	Starter
CS1041	S0233	Starter
CS1044	S0026	Starter
CS1045	S0195	Starter
CS1047	S0125	Starter

HC PARTS	AS	PRODUCT
CS1049	S0106	Starter
CS1053	S0241	Starter
CS1057	S3007	Starter
CS1058	S9031	Starter
CS1060	S3030	Starter
CS1061	S0024	Starter
CS1062	S0027	Starter
CS1064	S0240	Starter
CS1067	S0073	Starter
CS1075	S0087	Starter
CS1077	S0019	Starter
CS1108	S3056	Starter
CS1109	S4017	Starter
CS1111	S3019	Starter
CS1112	S0037	Starter
CS1114	S0176	Starter
CS1115	S0169	Starter
CS1117	S3020	Starter
CS1118	S0018	Starter
CS1119	S0048	Starter
CS1128	S3048	Starter
CS1130	S0129	Starter
CS1160	S5009	Starter
CS1161	S0135	Starter
CS1162	S0143	Starter
CS1163	S0012	Starter
CS1164	S3034	Starter
CS1165	S0049	Starter
CS1169	S0097	Starter
CS1171	S4035	Starter
CS1173	S9043	Starter
CS1174	S3008	Starter
CS1177	S3002	Starter
CS1179	S0225	Starter
CS1180	S0206	Starter
CS1181	S0248	Starter
CS1182	S9009	Starter
CS1185	S0066	Starter
CS1186	S3021	Starter
CS1187	S0192	Starter
CS1188	S0141	Starter
CS1189	S0035	Starter
CS1191	S4027	Starter
CS1192	S4028	Starter
CS1193	S3058R	Starter
CS1194	S0095	Starter
CS1196	S0154	Starter
CS1197	S0032	Starter
CS1198	S0089	Starter
CS1199	S0109	Starter
CS1200	S0224	Starter
CS1201	S0042	Starter
CS1202	S0091	Starter
CS1203	S0099	Starter
CS1204	S9011	Starter
CS1207	S3024	Starter
CS1208	S0234	Starter
CS1209	S0212	Starter
CS1210	S6016	Starter
CS1212	S0246	Starter
CS1242	S6007	Starter
CS1243	S0078	Starter
CS1245	S9002	Starter
CS1246	S9004	Starter
CS1247	S0231	Starter
CS1248	S0080	Starter
CS1249	S0136	Starter
CS1251	S3049	Starter
CS1252	S5044	Starter
CS1255	S0223(BOSCH)	Starter
CS1257	S0088	Starter
CS1258	S1010	Starter
CS1260	S3016	Starter
CS1263	S3039	Starter
CS1264	S0186R	Starter
CS1265	S4031	Starter
CS1266	S0146	Starter
CS1267	S0085	Starter
CS1268	S0082	Starter
CS1269	S0074	Starter
CS1271	S0155	Starter
CS1273	S5038	Starter
CS1274	S0076	Starter
CS1275	S9020	Starter
CS1276	S3012	Starter
CS1278	S3046	Starter
CS1279	S0070	Starter
CS1281	S3059	Starter
CS1283	S0227	Starter
CS1284	S0061	Starter
CS1285	S0108	Starter
CS1288	S3028	Starter
CS1289	S0185	Starter
CS1292	S6005	Starter
CS1293	S0090	Starter
CS1294	S3055	Starter
CS1323	S0243	Starter
CS1324	S3043	Starter
CS1325	S5022	Starter
CS1326	S0163	Starter
CS1329	S3029	Starter
CS1330	S3044	Starter
CS1331	S0160	Starter
CS1332	S5035	Starter
CS1333	S0071	Starter
CS1334	S0100	Starter
CS1335	S0230	Starter
CS1336	S9032	Starter
CS1337	S0119	Starter
CS1341	S9036	Starter
CS1342	S3027	Starter
CS1344	S3064	Starter
CS1345	S3060	Starter
CS1346	S3017	Starter
CS1347	S0120	Starter
CS1348	S5055	Starter
CS1377	S9033	Starter
CS1379	S4025	Starter
CS1380	S0137	Starter
CS1381	S1015	Starter
CS1382	S0178	Starter
CS1383	S6023	Starter
CS1386	S5027	Starter
CS1388	S5028	Starter
CS1389	S0139	Starter
CS1391	S3057	Starter
CS1393	S0140	Starter
CS1394	S0171	Starter
CS1396	S9035	Starter
CS1397	S0229	Starter
CS1399	S0138	Starter
CS1400	S0173	Starter
CS1401	S3038	Starter
CS1402	S9029	Starter
CS1403	S9030	Starter
CS1405	S0214	Starter
CS1406	S0228	Starter
CS1407	S0121	Starter
CS1410	S0218	Starter
CS1411	S0177	Starter
CS1412	S0242	Starter
CS1413	S0244	Starter
CS1415	S3061	Starter
CS1418	S2014	Starter
CS1420	S0194	Starter
CS1421	S0123	Starter
CS1423	S0175	Starter
CS1427	S5056	Starter
CS1428	S5042	Starter
CS1430	S9063	Starter
CS1435	S0193	Starter
CS1438	S9062	Starter
CS1439	S5036	Starter
CS1442	S5053	Starter
CS1444	S5050	Starter
CS1445	S0226	Starter
CS1449	S0159	Starter
CS1463	S5049	Starter
JA104IR	A2036	Alternator
JA171IR	A5028	Alternator
JA552IR	A6017	Alternator
JA585IR	A5006	Alternator
JA653IR	A5013	Alternator
JA660IR	A2012	Alternator
JA661IR	A2028	Alternator
JA663IR	A5030R	Alternator
JA672IR	A2013	Alternator
JA673IR	A2020	Alternator
JA674IR	A5018	Alternator
JA678IR	A2014	Alternator
JA680IR	A2027	Alternator
JA684IR	A5027	Alternator
JA754IR	A2034	Alternator
JA756IR	A4015	Alternator
JA761IR	A2004	Alternator
JA762IR	A2024	Alternator
JA764IR	A6021	Alternator
JA769IR	A2009	Alternator
JA773IR	A2015	Alternator
JA780IR	A2033	Alternator
JA789IR	A9026	Alternator
JA790IR	A9025	Alternator
JA792IR	A6020	Alternator
JA863IR	A2005	Alternator
JA870IR	A5011	Alternator
JA873IR	A2025	Alternator

HC PARTS	AS	PRODUCT
JA874IR	A2026	Alternator
JA877IR	A5036	Alternator
JA878IR	A5014	Alternator
JA880IR	A6024	Alternator
JA888IR	A9010	Alternator
JA971IR	A6022R	Alternator
JA972IR	A5007	Alternator
JA974IR	A2031	Alternator
JA976IR	A6012	Alternator
JA977IR	A9024	Alternator
JA980IR	A5026	Alternator
JA983IR	A5012	Alternator
JA984IR	A6016	Alternator
JA988IR	A6009	Alternator
JA990IR	A2008	Alternator
JA992IR	A0155	Alternator
JA994IR	A9005	Alternator
JA1116IR	A9028	Alternator
JA1171IR	A2010	Alternator
JA1172IR	A2001	Alternator
JA1174IR	A4022	Alternator
JA1175IR	A4078	Alternator
JA1179IR	A5001	Alternator
JA1180IR	A5016	Alternator
JA1182IR	A2007	Alternator
JA1183IR	A5008	Alternator
JA1184IR	A5004	Alternator
JA1290IR	A2032	Alternator
JA1366IR	A2002	Alternator
JA1369IR	A6032	Alternator
JA1370IR	A2016	Alternator
JA1376IR	A5017	Alternator
JA1405IR	A5026	Alternator
JA1419IR	A5003	Alternator
JA1513IR	A5021	Alternator
JA1515IR	A5019	Alternator
JA1516IR	A2035	Alternator
JA1517IR	A6001	Alternator
JA1518IR	A9001	Alternator
JA1521IR	A2003	Alternator
JA1523IR	A5010	Alternator
JA1524IR	A5005	Alternator
JA1526IR	A2011	Alternator
JA1528IR	A2021	Alternator
JA1530IR	A5020	Alternator
JA1533IR	A5025	Alternator
JA1594IR	A5015	Alternator
JA1595IR	A6028	Alternator
JA1600IR	A9004	Alternator
JA1602IR	A2023	Alternator
JA1606IR	A2029	Alternator
JA1607IR	A2006	Alternator
JA1608IR	A6003	Alternator
JA1618IR	A9007	Alternator
JA1708IR	A9035	Alternator
JA1709IR	A9018	Alternator
JA1715IR	A9006	Alternator
JA1718IR	A9017	Alternator
JA1721IR	A6027	Alternator
JA1723IR	A6002	Alternator
JA1724IR	A6035	Alternator
JA1788IR	A9009	Alternator
JA1789IR	A9008	Alternator
JA1790IR	A2030	Alternator
JA1794IR	A6033	Alternator
JA1796IR	A6025	Alternator
JA1798IR	A9029	Alternator
JA1800IR	A6013	Alternator
JA1804IR	A9019	Alternator
JA1891IR	A6015	Alternator
JA1893IR	A6037	Alternator
JA1896IR	A5022	Alternator
JA1899IR	A2022	Alternator
JA1901IR	A2038	Alternator
JS316	S6009	Starter
JS325	S5014	Starter
JS329	S5025	Starter
JS344	S5005	Starter
JS349	S5002	Starter
JS350	S5002	Starter
JS365	S6002	Starter
JS380	S5016	Starter
JS385	S6013	Starter
JS389	S2015	Starter
JS396	S6017	Starter
JS517	S2005	Starter
JS539	S2015	Starter
JS552	S6004	Starter
JS553	S5008	Starter
JS568	S0165	Starter
JS627	S5017	Starter
JS628	S5020	Starter
JS630	S6018	Starter
JS639	S6022	Starter
JS640	S5012	Starter
JS642	S6001	Starter
JS658	S5019	Starter
JS660	S2007	Starter
JS670	S5023	Starter
JS671	S5018	Starter
JS733	S6010	Starter
JS740	S9005	Starter
JS746	S6027	Starter
JS748	S2003	Starter
JS750	S9034	Starter
JS751	S5025	Starter
JS752	S5024	Starter
JS753	S2002	Starter
JS759	S2017	Starter
JS760	S6020	Starter
JS769	S5006	Starter
JS770	S5046	Starter
JS776	S2006	Starter
JS777	S5003	Starter
JS779	S5010	Starter
JS915	S5021	Starter
JS923	S3053	Starter
JS930	S6025	Starter
JS941	S2004	Starter
JS999	S2010	Starter
JS1000	S5034	Starter
JS1006	S5015	Starter
JS1009	S5004	Starter
JS1012	S6003	Starter
JS1015	S6019	Starter
JS1018	S6014	Starter
JS1021	S6026	Starter
JS1079	S0239	Starter
JS1091	S2002	Starter
JS1092	S5040	Starter
JS1096	S5037	Starter
JS1100	S2016	Starter
JS1104	S2018	Starter
JS1105	S0238	Starter
JS1135	S0020	Starter
JS1137	S2011	Starter
JS1139	S5033	Starter
JS1142	S4034	Starter
JS1147	S3063	Starter
JS1154	S6011	Starter
JS1155	S6021	Starter
JS1158	S2001	Starter
JS1159	S2009	Starter
JS1221	S5007	Starter
JS1226	S3036	Starter
JS1227	S5026	Starter
JS1234	S6024	Starter
JS1236	S0168	Starter
JS1238	S5043	Starter
JS1295	S5032	Starter
JS1296	S5045	Starter
JS1298	S6008	Starter
JS1305	S3051	Starter
JS1307	S3022	Starter
JS1321	S6012	Starter
JS1351	S5026	Starter
JS1354	S5011	Starter
JS1355	S3062	Starter
JS1356	S2019	Starter
JS1357	S6028	Starter
JS1358	S6032	Starter
JS1363	S6029	Starter
UA938IR	A1007	Alternator
UA939IR	A1008	Alternator
UA1538IR	A1006	Alternator
UA1620IR	A1018	Alternator
US810	S1002	Starter
US823	S1006	Starter
US827	S1009	Starter
US851	S9025	Starter
US852	S9028	Starter
US857	S1007	Starter
US858	S1003	Starter
US864	S1001	Starter
US868	S1012	Starter
US970	S1005	Starter
US1029	S1004	Starter
US1240	S1008	Starter

HELLA	AS	PRODUCT
5DA006501711	IM0003	Ignition Module
5DA006623041	IM0001	Ignition Module
5DA006623531	IM0003	Ignition Module
5DA006623581	IM1001	Ignition Module
5DA006623621	IC9004	Ignition Coil
5DA006623721	IM0002	Ignition Module
8EA725962-001	S9044	Starter

HELLA	AS	PRODUCT
8EA725964-001	S4002	Starter
8EA725965-001	S4018	Starter
8EA725966-001	S0219(BOSCH)R	Starter
8EA725967-001	S9044	Starter
8EA725973-001	S0002	Starter
8EA725974-001	S0220(BOSCH)R	Starter
8EA725989-001	S0128	Starter
8EA726004-001	S9057	Starter
8EA726005-001	S1013	Starter
8EA726019-001	S0067	Starter
8EA726023-001	S0151	Starter
8EA726025-001	S0003	Starter
8EA726026-001	S4004	Starter
8EA726027-001	S9021	Starter
8EA726029-001	S4037(MM)R	Starter
8EA726030-001	S4021	Starter
8EA726031-001	S4023	Starter
8EA726032-001	S9055	Starter
8EA726038-001	S0041	Starter
8EA726047-001	S0015	Starter
8EA726050-001	S4036(MM)R	Starter
8EA726054-001	S0072	Starter
8EA726055-001	S0045	Starter
8EA726056-001	S0050	Starter
8EA726057-001	S0077	Starter
8EA726063-001	S3015	Starter
8EA726066-001	S3014	Starter
8EA726070-001	S0217	Starter
8EA726074-001	S0004	Starter
8EA726079-001	S0016	Starter
8EA726080-001	S9008	Starter
8EA726083-001	S0114	Starter
8EA726084-001	S4006	Starter
8EA726085-001	S4007	Starter
8EA726086-001	S0183	Starter
8EA726089-001	S0069	Starter
8EA726093-001	S4008	Starter
8EA726098-001	S0047	Starter
8EA726099-001	S0132	Starter
8EA726106-001	S0014	Starter
8EA726108-001	S0029	Starter
8EA726109-001	S0236	Starter
8EA726118-001	S0127	Starter
8EA726119-001	S4039	Starter
8EA726120-001	S0034	Starter
8EA726121-001	S0084	Starter
8EA726124-001	S0204	Starter
8EA726125-001	S0052	Starter
8EA726132-001	S0011	Starter
8EA726134-001	S0043	Starter
8EA726136-001	S0235	Starter
8EA726137-001	S0055	Starter
8EA726138-001	S3005	Starter
8EA726139-001	S0107	Starter
8EA726142-001	S0092	Starter
8EA726143-001	S9056	Starter
8EA726148-001	S0187	Starter
8EA726149-001	S0145	Starter
8EA726150-001	S0221(BOSCH)R	Starter
8EA726151-001	S9046	Starter
8EA726152-001	S0133	Starter
8EA726155-001	S0205	Starter
8EA726158-001	S0148	Starter
8EA726162-001	S0044	Starter
8EA726164-001	S3003	Starter
8EA726170-001	S0068	Starter
8EA726177-001	S0063	Starter
8EA726182-001	S9043	Starter
8EA726183-001	S3031	Starter
8EA726186-001	S0190R	Starter
8EA726189-001	S0008	Starter
8EA726191-001	S3009	Starter
8EA726196-001	S0152	Starter
8EA726200-001	S0144	Starter
8EA726205-001	S3032	Starter
8EA726207-001	S0051	Starter
8EA726214-001	S4009	Starter
8EA726216-001	S0247	Starter
8EA726218-001	S3002	Starter
8EA726219-001	S0040	Starter
8EA726221-001	S0131	Starter
8EA726223-001	S0142	Starter
8EA726227-001	S0046	Starter
8EA726246-001	S4033	Starter
8EA726253-001	S0197	Starter
8EA726413-001	S6009	Starter
8EA726421-001	S5014	Starter
8EA726423-001	S5025	Starter
8EA726436-001	S5005	Starter
8EA726441-001	S5002	Starter
8EA726442-001	S5002	Starter
8EA726456-001	S6002	Starter
8EA726468-001	S5016	Starter
8EA726473-001	S6013	Starter
8EA726477-001	S2015	Starter
8EA726484-001	S6017	Starter
8EA726490-001	S2005	Starter
8EA726501-001	S2015	Starter
8EA726504-001	S6004	Starter
8EA726505-001	S5008	Starter
8EA726511-001	S0165	Starter
8EA726513-001	S5017	Starter
8EA726514-001	S5020	Starter
8EA726516-001	S6018	Starter
8EA726525-001	S6022	Starter
8EA726550-001	S5012	Starter
8EA726552-001	S6001	Starter
8EA726737306	S9058	Starter
8EA730171-001	S0083	Starter
8EA730174-001	S9024	Starter
8EA730176-001	S0038	Starter
8EA730178-001	S0150	Starter
8EA730180-001	S0103	Starter
8EA730181-001	S0166	Starter
8EA730182-001	S0054	Starter
8EA730183-001	S9014	Starter
8EA730185-001	S0057	Starter
8EA730187-001	S0023	Starter
8EA730188-001	S0062	Starter
8EA730189-001	S0033	Starter
8EA730190-001	S0146	Starter
8EA730191-001	S3054	Starter
8EA730194-001	S0039	Starter
8EA730196-001	S0059	Starter
8EA730197-001	S3004	Starter
8EA730198-001	S0110	Starter
8EA730199-001	S0077	Starter
8EA730200-001	S3001	Starter
8EA730204-001	S0022	Starter
8EA730205-001	S0111	Starter
8EA730209-001	S4011	Starter
8EA730217-001	S4012	Starter
8EA730219-001	S4013	Starter
8EA730221-001	S4014	Starter
8EA730222-001	S0112	Starter
8EA730226-001	S0007	Starter
8EA730246-001	S5019	Starter
8EA730248-001	S2007	Starter
8EA730258-001	S5023	Starter
8EA730259-001	S5018	Starter
8EA730274-001	S6010	Starter
8EA730281-001	S9005	Starter
8EA730287-001	S6027	Starter
8EA730288-001	S2003	Starter
8EA730290-001	S9034	Starter
8EA730291-001	S5025	Starter
8EA730293-001	S1002	Starter
8EA730303-001	S1006	Starter
8EA730307-001	S1009	Starter
8EA730327-001	S9025	Starter
8EA730328-001	S9028	Starter
8EA731762-001	S0113	Starter
8EA731763-001	S9019	Starter
8EA731769-001	S0030	Starter
8EA731771-001	S0126	Starter
8EA731774-001	S3052	Starter
8EA731778-001	S4016	Starter
8EA731779-001	S3041	Starter
8EA731780-001	S0158	Starter
8EA731781-001	S3011	Starter
8EA731787-001	S5024	Starter
8EA731788-001	S2002	Starter
8EA731794-001	S2017	Starter
8EA731795-001	S6020	Starter
8EA731804-001	S5006	Starter
8EA731805-001	S5046	Starter
8EA732651-001	S4022	Starter
8EA732653-001	S9010	Starter
8EA732656-001	S3026	Starter
8EA732657-001	S0056	Starter
8EA732658-001	S0098	Starter
8EA732659-001	S0104	Starter
8EA732660-001	S0065	Starter
8EA732661-001	S2006	Starter
8EA732662-001	S5003	Starter
8EA732664-001	S5010	Starter
8EA732680-001	S1007	Starter
8EA732681-001	S1003	Starter
8EA732856-001	S1001	Starter
8EA732860-001	S1012	Starter
8EA732892-001	S0134	Starter
8EA732894-001	S3045	Starter
8EA737084-001	S0017	Starter
8EA737085-001	S3013	Starter
8EA737086-001	S0174	Starter
8EA737089-001	S9024	Starter

HELLA	AS	PRODUCT
8EA737095-001	S9067	Starter
8EA737099-001	S0009	Starter
8EA737107-001	S9015	Starter
8EA737108-001	S0021	Starter
8EA737116-001	S5021	Starter
8EA737124-001	S3053	Starter
8EA737131-001	S6025	Starter
8EA737146-001	S0064	Starter
8EA737147-001	S3025	Starter
8EA737148-001	S4020	Starter
8EA737149-001	S0036	Starter
8EA737150-001	S9001	Starter
8EA737151-001	S4015	Starter
8EA737180-001	S0058	Starter
8EA737183-001	S3047	Starter
8EA737184-001	S0093	Starter
8EA737186-001	S2004	Starter
8EA737190-001	S2010	Starter
8EA737191-001	S5034	Starter
8EA737235-001	S0157	Starter
8EA737237-001	S0094	Starter
8EA737238-001	S0196	Starter
8EA737239-001	S0028	Starter
8EA737240-001	S3050	Starter
8EA737243-001	S4019	Starter
8EA737245-001	S9052	Starter
8EA737249-001	S4001	Starter
8EA737250-001	S9021	Starter
8EA737252-001	S3042	Starter
8EA737253-001	S0031	Starter
8EA737254-001	S0105	Starter
8EA737260-001	S5015	Starter
8EA737263-001	S5004	Starter
8EA737266-001	S6003	Starter
8EA737273-001	S4033	Starter
8EA737288-001	S0010	Starter
8EA737289-001	S6019	Starter
8EA737290-001	S0233	Starter
8EA737293-001	S3040	Starter
8EA737306-001	S9058	Starter
8EA737314-001	S0106	Starter
8EA737320-001	S6014	Starter
8EA737340-001	S0241	Starter
8EA737345-001	S6026	Starter
8EA737351-001	S3007	Starter
8EA737358-001	S9031	Starter
8EA737361-001	S0239	Starter
8EA737376-001	S3030	Starter
8EA737403-001	S0024	Starter
8EA737406-001	S0027	Starter
8EA737408-001	S0240	Starter
8EA737417-001	S0073	Starter
8EA737424-001	S2002	Starter
8EA737454-001	S5040	Starter
8EA737476-001	S5037	Starter
8EA737484-001	S2016	Starter
8EA737488-001	S0087	Starter
8EA737494-001	S0019	Starter
8EA737508-001	S2018	Starter
8EA737510-001	S0238	Starter
8EA737517-001	S3056	Starter
8EA737526-001	S4017	Starter
8EA737537-001	S3019	Starter
8EA737540-001	S0037	Starter
8EA737543-001	S0020	Starter
8EA737557-001	S0176	Starter
8EA737559-001	S2011	Starter
8EA737567-001	S0169	Starter
8EA737575-001	S3020	Starter
8EA737578-001	S0018	Starter
8EA737579-001	S0048	Starter
8EA737588-001	S5033	Starter
8EA737608-001	S4034	Starter
8EA737623-001	S3048	Starter
8EA737629-001	S0129	Starter
8EA737656-001	S5009	Starter
8EA737659-001	S0135	Starter
8EA737660-001	S0143	Starter
8EA737676-001	S0012	Starter
8EA737677-001	S5029	Starter
8EA737680-001	S0049	Starter
8EA737692-001	S0097	Starter
8EA737696-001	S3063	Starter
8EA737706-001	S4035	Starter
8EA737711-001	S6011	Starter
8EA737722-001	S9043	Starter
8EA737725-001	S3008	Starter
8EA737744-001	S6011	Starter
8EA737751-001	S3002	Starter
8EA737760-001	S6021	Starter
8EA737763-001	S0225	Starter
8EA737765-001	S0206	Starter
8EA737767-001	S0248	Starter
8EA737773-001	S9009	Starter
8EA737793-001	S0066	Starter
8EA737794-001	S2001	Starter
8EA737797-001	S3021	Starter
8EA737802-001	S0192	Starter
8EA737806-001	S2009	Starter
8EA737815-001	S0141	Starter
8EA737816-001	S0035	Starter
8EA737820-001	S4027	Starter
8EA737823-001	S4028	Starter
8EA737830-001	S3058R	Starter
8EA737834-001	S0095	Starter
8EA737850-001	S0154	Starter
8EA737852-001	S0032	Starter
8EA737853-001	S0089	Starter
8EA737854-001	S0109	Starter
8EA737856-001	S0224	Starter
8EA737859-001	S0042	Starter
8EA737864-001	S0091	Starter
8EA737867-001	S0099	Starter
8EA737876-001	S9011	Starter
8EA737881-001	S5007	Starter
8EA737882-001	S3024	Starter
8EA737891-001	S0234	Starter
8EA737892-001	S0212	Starter
8EA737893-001	S6016	Starter
8EA737901-001	S0246	Starter
8EA737904-001	S1004	Starter
8EA737911-001	S6007	Starter
8EA737912-001	S0078	Starter
8EA737919-001	S9002	Starter
8EA737920-001	S9004	Starter
8EA737921-001	S0231	Starter
8EA737936-001	S0080	Starter
8EA737940-001	S0136	Starter
8EA737943-001	S3036	Starter
8EA737948-001	S5026	Starter
8EA737958-001	S3049	Starter
8EA737959-001	S1008	Starter
8EA737960-001	S5044	Starter
8EA737973-001	S6024	Starter
8EA737977-001	S0223(BOSCH)	Starter
8EA737988-001	S0088	Starter
8EA737999-001	S1010	Starter
8EA738002-001	S0168	Starter
8EA738007-001	S5043	Starter
8EA738016-001	S3016	Starter
8EA738024-001	S3039	Starter
8EA738026-001	S0186R	Starter
8EA738027-001	S4031	Starter
8EA738028-001	S0146	Starter
8EA738029-001	S0085	Starter
8EA738030-001	S0082	Starter
8EA738034-001	S5032	Starter
8EA738038-001	S1017	Starter
8EA738039-001	S5045	Starter
8EA738042-001	S6008	Starter
8EA738056-001	S0155	Starter
8EA738061-001	S5038	Starter
8EA738069-001	S0076	Starter
8EA738080-001	S9020	Starter
8EA738081-001	S3012	Starter
8EA738091-001	S3046	Starter
8EA738092-001	S0070	Starter
8EA738107-001	S3059	Starter
8EA738110-001	S0227	Starter
8EA738111-001	S0061	Starter
8EA738113-001	S0108	Starter
8EA738127-001	S3028	Starter
8EA738132-001	S0185	Starter
8EA738136-001	S3051	Starter
8EA738139-001	S3022	Starter
8EA738152-001	S6005	Starter
8EA738156-001	S0090	Starter
8EA738157-001	S3055	Starter
8EA738165-001	S0243	Starter
8EA738166-001	S3043	Starter
8EA738173-001	S5022	Starter
8EA738174-001	S0163	Starter
8EA738198-001	S3029	Starter
8EA738199-001	S3044	Starter
8EA738212-001	S0160	Starter
8EA738223-001	S0071	Starter
8EA738232-001	S3018	Starter
8EA738237-001	S6012	Starter
8EA738240-001	S0230	Starter
8EA738242-001	S0119	Starter
8EA738251-001	S3027	Starter
8EA738255-001	S3064	Starter
8EA738258-001	S9036	Starter
8EA738258-011	S3037	Starter
8EA738258-081	S0178	Starter
8EA738258-091	S9036	Starter

HELLA	AS	PRODUCT
8EA738258-101	S4025	Starter
8EA738258-111	S6023	Starter
8EA738258-131	S3062	Starter
8EA738258-141	S6028	Starter
8EA738258-151	S0139	Starter
8EA738258-201	S9032	Starter
8EA738258-221	S2019	Starter
8EA738258-231	S5035	Starter
8EA738258-261	S3060	Starter
8EA738258-271	S3017	Starter
8EA738258-281	S9033	Starter
8EA738258-291	S5027	Starter
8EA738258-301	S3057	Starter
8EA738258-311	S9014	Starter
8EA738258-361	S5055	Starter
8EA738258-371	S0137	Starter
8EA738258-381	S5028	Starter
8EA738258-401	S6032	Starter
8EA738258-431	S6029	Starter
8EA738258-461	S3038	Starter
8EA738258-481	S0214	Starter
8EA738258-491	S0228	Starter
8EA738258-501	S3023	Starter
8EA738258-541	S0140	Starter
8EA738258-551	S9029	Starter
8EA738258-561	S9030	Starter
8EA738258-581	S0218	Starter
8EA738258-591	S0177	Starter
8EA738258-601	S0242	Starter
8EA738258-611	S3061	Starter
8EA738258-621	S5011	Starter
8EA738258-641	S0244	Starter
8EA749553-001	S1015	Starter
8EL725587-001	A0099	Alternator
8EL725609-001	A3045	Alternator
8EL725622-001	A0184	Alternator
8EL725625-001	A0020	Alternator
8EL725626-001	A0017	Alternator
8EL725640-001	A4029	Alternator
8EL725649-001	A0058	Alternator
8EL725651-001	A3046	Alternator
8EL725663-001	A0087	Alternator
8EL725671-001	A4059	Alternator
8EL725692-001	A3013	Alternator
8EL725699-001	A0028	Alternator
8EL725703-001	A3047	Alternator
8EL725707-001	A4011	Alternator
8EL725709-001	A4081	Alternator
8EL725716-001	A3001	Alternator
8EL725720-001	A0093	Alternator
8EL725721-001	A0141	Alternator
8EL725722-001	A0094	Alternator
8EL725726-001	A0110	Alternator
8EL725727-001	A4012	Alternator
8EL725730-001	A0103	Alternator
8EL725736-001	A0001	Alternator
8EL725738-001	A0015	Alternator
8EL725742-001	A0014	Alternator
8EL725743-001	A0084	Alternator
8EL725744-001	A0030	Alternator
8EL725748-001	A0031	Alternator
8EL725754-001	A4063	Alternator
8EL725757-001	A0134	Alternator
8EL725768-001	A0092	Alternator
8EL725770-001	A0055	Alternator
8EL725771-001	A0098	Alternator
8EL725772-001	A0102	Alternator
8EL725775-001	A3049	Alternator
8EL725777-001	A3048	Alternator
8EL725783-001	A3007	Alternator
8EL725786-001	A3012	Alternator
8EL725787-001	A0104	Alternator
8EL725799-001	A0009	Alternator
8EL725800-001	A0203	Alternator
8EL725801-001	A0109	Alternator
8EL725802-001	A0070	Alternator
8EL725805-001	A4065	Alternator
8EL725815-001	A0115	Alternator
8EL725817-001	A0108	Alternator
8EL725826-001	A3002	Alternator
8EL725832-001	A3005	Alternator
8EL725834-001	A3044	Alternator
8EL725835-001	A3044	Alternator
8EL725844-001	A3006	Alternator
8EL725846-001	A0026	Alternator
8EL725848-001	A3009	Alternator
8EL725851-001	A4013	Alternator
8EL725852-001	A4067	Alternator
8EL725858-001	A0097	Alternator
8EL725859-001	A0107	Alternator
8EL725861-001	A4063	Alternator
8EL725862-001	A3004	Alternator
8EL725876-001	A0179	Alternator
8EL725878-001	A0101	Alternator
8EL725879-001	A4044	Alternator
8EL725883-001	A4065	Alternator
8EL725884-001	A3003	Alternator
8EL725887-001	A3011	Alternator
8EL725893-001	A0106	Alternator
8EL725899-001	A4009	Alternator
8EL725901-001	A3020	Alternator
8EL725902-001	A0086	Alternator
8EL725918-001	A3026	Alternator
8EL725919-001	A3008	Alternator
8EL725921-001	A3015	Alternator
8EL725923-001	A3021	Alternator
8EL725926-001	A4030	Alternator
8EL725927-001	A3026	Alternator
8EL725933-001	A3050	Alternator
8EL725943-001	A0004	Alternator
8EL725944-001	A0012	Alternator
8EL725951-001	A0069	Alternator
8EL726079-001	S0016	Starter
8EL726260-001	A2036	Alternator
8EL726316-001	A5028	Alternator
8EL726351-001	A6017	Alternator
8EL726363-001	A5006	Alternator
8EL726368-001	A5013	Alternator
8EL726375-001	A2012	Alternator
8EL726376-001	A2028	Alternator
8EL726378-001	A5030R	Alternator
8EL726387-001	A2013	Alternator
8EL726388-001	A2020	Alternator
8EL726389-001	A5018	Alternator
8EL726393-001	A2014	Alternator
8EL726395-001	A2027	Alternator
8EL726546-001	A4014	Alternator
8EL726547-001	A0111	Alternator
8EL730000-001	A0088	Alternator
8EL730006-001	A0105	Alternator
8EL730015-001	A4041	Alternator
8EL730019-001	A3099R	Alternator
8EL730020-001	A0100	Alternator
8EL730028-001	A3039	Alternator
8EL730031-001	A0202	Alternator
8EL730032-001	A0013	Alternator
8EL730034-001	A0077	Alternator
8EL730036-001	A0152	Alternator
8EL730038-001	A0006	Alternator
8EL730046-001	A0026	Alternator
8EL730047-001	A0058	Alternator
8EL730057-001	A3038	Alternator
8EL730060-001	A3016	Alternator
8EL730062-001	A4051	Alternator
8EL730067-001	A5027	Alternator
8EL730087-001	A2034	Alternator
8EL730089-001	A4015	Alternator
8EL730094-001	A2004	Alternator
8EL730096-001	A2024	Alternator
8EL730098-001	A6021	Alternator
8EL730103-001	A2009	Alternator
8EL730107-001	A2015	Alternator
8EL730114-001	A2033	Alternator
8EL730123-001	A9026	Alternator
8EL730124-001	A9025	Alternator
8EL730126-001	A6020	Alternator
8EL730154-001	A1007	Alternator
8EL730155-001	A1008	Alternator
8EL731686-001	A3057	Alternator
8EL731688-001	A0131	Alternator
8EL731689-001	A0048	Alternator
8EL731690-001	A0078	Alternator
8EL731691-001	A3043	Alternator
8EL731692-001	A3025	Alternator
8EL731699-001	A3014	Alternator
8EL731703-001	A0095	Alternator
8EL731704-001	A0096	Alternator
8EL731706-001	A3075	Alternator
8EL731710-001	A3010	Alternator
8EL731711-001	A9015	Alternator
8EL731712-001	A4018	Alternator
8EL731714-001	A0010	Alternator
8EL731715-001	A0016	Alternator
8EL731718-001	A3060	Alternator
8EL731719-001	A3061	Alternator
8EL731723-001	A4008	Alternator
8EL731724-001	A4003	Alternator
8EL731725-001	A4033	Alternator
8EL731727-001	A4047	Alternator
8EL731732-001	A3100R	Alternator
8EL731750-001	A2005	Alternator
8EL731757-001	A5011	Alternator
8EL732690-001	A0008	Alternator
8EL732693-001	A0091	Alternator
8EL732694-001	A0028	Alternator
8EL732704-001	A0148	Alternator

HELLA	AS	PRODUCT
8EL732706-001	A9003	Alternator
8EL732707-001	A0002	Alternator
8EL732709-001	A0153	Alternator
8EL732710-001	A3029	Alternator
8EL732711-001	A3019	Alternator
8EL732715-001	A0163	Alternator
8EL732716-001	A0005	Alternator
8EL732717-001	A0114	Alternator
8EL732719-001	A2025	Alternator
8EL732720-001	A2026	Alternator
8EL732723-001	A5036	Alternator
8EL732724-001	A5014	Alternator
8EL732726-001	A6024	Alternator
8EL732734-001	A9010	Alternator
8EL732736-001	A6022R	Alternator
8EL732737-001	A5007	Alternator
8EL732739-001	A2031	Alternator
8EL732741-001	A6012	Alternator
8EL732867-001	A9024	Alternator
8EL732870-001	A5026	Alternator
8EL732872-001	A9030R	Alternator
8EL732874-001	A3059	Alternator
8EL732875-001	A4010	Alternator
8EL732900-001	A1001	Alternator
8EL737003-001	A1001	Alternator
8EL737013-001	A3062	Alternator
8EL737014-001	A3022	Alternator
8EL737017-001	A0089	Alternator
8EL737019-001	A1012	Alternator
8EL737029-001	A3031	Alternator
8EL737032-001	A4019	Alternator
8EL737033-001	A4007	Alternator
8EL737034-001	A4031	Alternator
8EL737036-001	A0197	Alternator
8EL737038-001	A0118	Alternator
8EL737041-001	A0156	Alternator
8EL737044-001	A3040	Alternator
8EL737047-001	A3096	Alternator
8EL737049-001	A4079	Alternator
8EL737051-001	A1010	Alternator
8EL737058-001	A5012	Alternator
8EL737059-001	A6016	Alternator
8EL737063-001	A6009	Alternator
8EL737065-001	A2008	Alternator
8EL737067-001	A0155	Alternator
8EL737068-001	A9005	Alternator
8EL737071-001	A9028	Alternator
8EL737159-001	A3081	Alternator
8EL737162-001	A0117	Alternator
8EL737194-001	A0151	Alternator
8EL737195-001	A0029	Alternator
8EL737197-001	A3076	Alternator
8EL737199-001	A0081	Alternator
8EL737201-001	A4069	Alternator
8EL737203-001	A3095	Alternator
8EL737204-001	A3041	Alternator
8EL737207-001	A4017	Alternator
8EL737208-001	A4016	Alternator
8EL737209-001	A4024	Alternator
8EL737211-001	A4032	Alternator
8EL737212-001	A3042	Alternator
8EL737217-001	A0018	Alternator
8EL737218-001	A0082	Alternator
8EL737219-001	A4049	Alternator
8EL737226-001	A2010	Alternator
8EL737282-001	A4027	Alternator
8EL737284-001	A4025	Alternator
8EL737285-001	A4005	Alternator
8EL737287-001	A4057	Alternator
8EL737295-001	A4004	Alternator
8EL737296-001	A4060	Alternator
8EL737298-001	A4025	Alternator
8EL737301-001	A2001	Alternator
8EL737305-001	A0128	Alternator
8EL737307-001	A4011	Alternator
8EL737308-001	A4022	Alternator
8EL737309-001	A0019	Alternator
8EL737310-001	A0186	Alternator
8EL737311-001	A4078	Alternator
8EL737323-001	A5001	Alternator
8EL737324-001	A5016	Alternator
8EL737327-001	A2007	Alternator
8EL737328-001	A5008	Alternator
8EL737339-001	A5004	Alternator
8EL737364-001	A0021	Alternator
8EL737365-001	A0022	Alternator
8EL737368-001	A0080	Alternator
8EL737372-001	A3024	Alternator
8EL737379-001	A0113	Alternator
8EL737380-001	A3066	Alternator
8EL737398-001	A4026	Alternator
8EL737399-001	A1014	Alternator
8EL737402-001	A0157	Alternator
8EL737405-001	A4006	Alternator
8EL737425-001	A0161	Alternator
8EL737429-001	A0130	Alternator
8EL737432-001	A0079	Alternator
8EL737436-001	A0129	Alternator
8EL737440-001	A0173	Alternator
8EL737441-001	A0172	Alternator
8EL737444-001	A3092	Alternator
8EL737445-001	A3028	Alternator
8EL737447-001	A4052	Alternator
8EL737449-001	A3090	Alternator
8EL737450-001	A3088	Alternator
8EL737451-001	A3089	Alternator
8EL737452-001	A3018	Alternator
8EL737466-001	A2032	Alternator
8EL737469-001	A9002	Alternator
8EL737470-001	A5002	Alternator
8EL737475-001	A4020	Alternator
8EL737502-001	A0174	Alternator
8EL737507-001	A4040	Alternator
8EL737509-001	A3091	Alternator
8EL737516-001	A0135	Alternator
8EL737518-001	A0023	Alternator
8EL737520-001	A4055	Alternator
8EL737529-001	A4035	Alternator
8EL737535-001	A0176	Alternator
8EL737538-001	A3058	Alternator
8EL737551-001	A4075	Alternator
8EL737554-001	A0027	Alternator
8EL737555-001	A4033	Alternator
8EL737556-001	A2002	Alternator
8EL737561-001	A0112	Alternator
8EL737565-001	A1013	Alternator
8EL737566-001	A1003	Alternator
8EL737569-001	A6032	Alternator
8EL737570-001	A2016	Alternator
8EL737577-001	A3082	Alternator
8EL737593-001	A0059	Alternator
8EL737595-001	A0133	Alternator
8EL737597-001	A5017	Alternator
8EL737598-001	A1002	Alternator
8EL737601-001	A0119	Alternator
8EL737603-001	A3065	Alternator
8EL737604-001	A5026	Alternator
8EL737607-001	A0040	Alternator
8EL737611-001	A0178	Alternator
8EL737618-001	A3111	Alternator
8EL737619-001	A4065	Alternator
8EL737633-001	A0025	Alternator
8EL737634-001	A0061	Alternator
8EL737641-001	A0060	Alternator
8EL737642-001	A3079	Alternator
8EL737643-001	A0036	Alternator
8EL737644-001	A0127	Alternator
8EL737646-001	A3017	Alternator
8EL737648-001	A3032	Alternator
8EL737658-001	A9015	Alternator
8EL737662-001	A4036	Alternator
8EL737673-001	A4037	Alternator
8EL737675-001	A5003	Alternator
8EL737678-001	A0044	Alternator
8EL737679-001	A0140	Alternator
8EL737685-001	A1009	Alternator
8EL737688-001	A5033	Alternator
8EL737689-001	A4021	Alternator
8EL737690-001	A0071	Alternator
8EL737691-001	A0003	Alternator
8EL737707-001	A0035	Alternator
8EL737711-001	A4028	Alternator
8EL737714-001	A0041	Alternator
8EL737716-001	A4064	Alternator
8EL737724-001	A0032	Alternator
8EL737731-001	A0054	Alternator
8EL737736-001	A5021	Alternator
8EL737743-001	A5019	Alternator
8EL737745-001	A3036	Alternator
8EL737746-001	A3017	Alternator
8EL737748-001	A3032	Alternator
8EL737750-001	A0187	Alternator
8EL737752-001	A2035	Alternator
8EL737758-001	A0011	Alternator
8EL737761-001	A0051	Alternator
8EL737762-001	A4080	Alternator
8EL737764-001	A6001	Alternator
8EL737768-001	A3027	Alternator
8EL737770-001	A0125	Alternator
8EL737771-001	A0037	Alternator
8EL737772-001	A9001	Alternator
8EL737778-001	A0046	Alternator
8EL737779-001	A0042	Alternator
8EL737781-001	A0145	Alternator
8EL737783-001	A0050	Alternator
8EL737786-001	A0189	Alternator

HELLA	AS	PRODUCT
8EL737787-001	A4066	Alternator
8EL737789-001	A0198	Alternator
8EL737791-001	A3051	Alternator
8EL737795-001	A2003	Alternator
8EL737798-001	A5010	Alternator
8EL737799-001	A5005	Alternator
8EL737803-001	A2011	Alternator
8EL737808-001	A0033	Alternator
8EL737809-001	A2021	Alternator
8EL737811-001	A0149	Alternator
8EL737812-001	A4043	Alternator
8EL737813-001	A3072	Alternator
8EL737814-001	A0188	Alternator
8EL737819-001	A5020	Alternator
8EL737825-001	A3023	Alternator
8EL737828-001	A5025	Alternator
8EL737829-001	A4053	Alternator
8EL737833-001	A0056	Alternator
8EL737836-001	A0162	Alternator
8EL737844-001	A3073	Alternator
8EL737846-001	A3030	Alternator
8EL737848-001	A0057	Alternator
8EL737849-001	A0052	Alternator
8EL737858-001	A1006	Alternator
8EL737861-001	A1011	Alternator
8EL737862-001	A0171	Alternator
8EL737866-001	A3094	Alternator
8EL737871-001	A0158	Alternator
8EL737872-001	A0038	Alternator
8EL737873-001	A3108	Alternator
8EL737879-001	A5015	Alternator
8EL737883-001	A6028	Alternator
8EL737885-001	A0071	Alternator
8EL737886-001	A0121	Alternator
8EL737887-001	A0007	Alternator
8EL737895-001	A4061	Alternator
8EL737896-001	A9034	Alternator
8EL737902-001	A3037	Alternator
8EL737903-001	A0044	Alternator
8EL737909-001	A0169	Alternator
8EL737913-001	A0226	Starter
8EL737916-001	A0136	Alternator
8EL737917-001	A9004	Alternator
8EL737922-001	A2023	Alternator
8EL737925-001	A0205R	Alternator
8EL737926-001	A9016	Alternator
8EL737927-001	A0068	Alternator
8EL737929-001	A9011	Alternator
8EL737930-001	A0043	Alternator
8EL737931-001	A4076	Alternator
8EL737933-001	A3069	Alternator
8EL737935-001	A3053	Alternator
8EL737938-001	A3035	Alternator
8EL737941-001	A2029	Alternator
8EL737944-001	A2006	Alternator
8EL737945-001	A6003	Alternator
8EL737956-001	A0191	Alternator
8EL737957-001	A4045	Alternator
8EL737965-001	A4054	Alternator
8EL737968-001	A5009	Alternator
8EL737969-001	A3077	Alternator
8EL737970-001	A0216	Alternator
8EL737976-001	A0206	Alternator
8EL737982-001	A0217	Alternator
8EL737984-001	A3063	Alternator
8EL737985-001	A0073	Alternator
8EL737986-001	A3054	Alternator
8EL737987-001	A3032	Alternator
8EL737989-001	A0034	Alternator
8EL737997-001	A1004	Alternator
8EL737998-001	A1005	Alternator
8EL738001-001	A0049	Alternator
8EL738003-001	A3074	Alternator
8EL738004-001	A1018	Alternator
8EL738006-001	A3101	Alternator
8EL738008-001	A6036	Alternator
8EL738009-001	A1016R	Alternator
8EL738010-001	A3033	Alternator
8EL738011-001	A0075	Alternator
8EL738012-001	A3085R	Alternator
8EL738014-001	A3056	Alternator
8EL738018-001	A9007	Alternator
8EL738019-001	A0196	Alternator
8EL738035-001	A5024	Alternator
8EL738041-001	A0144	Alternator
8EL738053-001	A0122	Alternator
8EL738054-001	A0120	Alternator
8EL738055-001	A0175	Alternator
8EL738058-001	A4077	Alternator
8EL738059-001	A4034	Alternator
8EL738063-001	A0074	Alternator
8EL738065-001	A0218	Alternator
8EL738068-001	A0219	Alternator
8EL738072-001	A9035	Alternator
8EL738073-001	A9018	Alternator
8EL738082-001	A4062	Alternator
8EL738084-001	A0085	Alternator
8EL738085-001	A5034	Alternator
8EL738093-001	A0053	Alternator
8EL738094-001	A0047	Alternator
8EL738096-001	A5023	Alternator
8EL738099-001	A4058	Alternator
8EL738102-001	A9006	Alternator
8EL738106-001	A9017	Alternator
8EL738116-001	A0225	Alternator
8EL738122-001	A3083	Alternator
8EL738124-001	A6027	Alternator
8EL738126-001	A4056	Alternator
8EL738128-001	A0195	Alternator
8EL738129-001	A3102	Alternator
8EL738130-001	A3087	Alternator
8EL738131-001	A3070	Alternator
8EL738134-001	A9023	Alternator
8EL738137-001	A6002	Alternator
8EL738140-001	A3109	Alternator
8EL738141-001	A4046	Alternator
8EL738143-001	A6035	Alternator
8EL738144-001	A0142	Alternator
8EL738147-001	A3052	Alternator
8EL738159-001	A0201R	Alternator
8EL738160-001	A0066	Alternator
8EL738161-001	A4058	Alternator
8EL738162-001	A3084R	Alternator
8EL738163-001	A3068	Alternator
8EL738164-001	A0076	Alternator
8EL738178-001	A4046	Alternator
8EL738182-001	A0220	Alternator
8EL738185-001	A0208	Alternator
8EL738186-001	A0194	Alternator
8EL738187-001	A9020	Alternator
8EL738188-001	A3105	Alternator
8EL738189-001	A9021	Alternator
8EL738190-001	A5029	Alternator
8EL738192-001	A0190	Alternator
8EL738193-001	A3097	Alternator
8EL738195-001	A0072	Alternator
8EL738196-001	A0160	Alternator
8EL738197-001	A3034	Alternator
8EL738200-001	A0039	Alternator
8EL738202-001	A0181	Alternator
8EL738203-001	A0180	Alternator
8EL738204-001	A0170	Alternator
8EL738206-001	A0154	Alternator
8EL738207-001	A9009	Alternator
8EL738208-001	A9008	Alternator
8EL738210-001	A2030	Alternator
8EL738211-021	A0192	Alternator
8EL738211-031	A3104	Alternator
8EL738211-041	A6034	Alternator
8EL738211-051	A0067	Alternator
8EL738211-081	A3078	Alternator
8EL738211-091	A0222	Alternator
8EL738211-101	A0146	Alternator
8EL738211-111	A0137	Alternator
8EL738211-121	A0138	Alternator
8EL738211-131	A0228	Alternator
8EL738211-141	A0213	Alternator
8EL738211-151	A4074	Alternator
8EL738211-201	A0199	Alternator
8EL738211-221	A3067	Alternator
8EL738211-231	A0167	Alternator
8EL738211-241	A0210	Alternator
8EL738211-251	A0193	Alternator
8EL738211-261	A0062	Alternator
8EL738211-271	A0168	Alternator
8EL738211-291	A9019	Alternator
8EL738211-331	A6018	Alternator
8EL738211-351	A0207	Alternator
8EL738211-381	A9012	Alternator
8EL738211-391	A0159	Alternator
8EL738211-461	A5022	Alternator
8EL738211-491	A6011	Alternator
8EL738211-501	A6010	Alternator
8EL738211-511	A6025	Alternator
8EL738211-521	A6015	Alternator
8EL738211-541	A6037	Alternator
8EL738211-571	A0064	Alternator
8EL738211-591	A2022	Alternator
8EL738211-601	A2038	Alternator
8EL738211-611	A0139	Alternator
8EL738211-621	A4042	Alternator
8EL738211-631	A4073	Alternator
8EL738211-641	A4072	Alternator
8EL738211-661	A4048	Alternator
8EL738211-681	A3098R	Alternator
8EL738211-771	A0150	Alternator

HELLA	AS	PRODUCT
8EL738211-781	A0211	Alternator
8EL738213-001	A0166	Alternator
8EL738214-001	A0164	Alternator
8EL738217-001	A3086	Alternator
8EL738221-001	A0165	Alternator
8EL738224-001	A0209	Alternator
8EL738226-001	A6033	Alternator
8EL738235-001	A5024	Alternator
8EL738238-001	A9029	Alternator
8EL738247-001	A6013	Alternator
8EL738257-001	A3071	Alternator
8EL748558-001	A0147	Alternator
8EL749557-001	A5035	Alternator
8EL749558-001	A0147	Alternator
8EL749559-001	A1015R	Alternator

HINO	AS	PRODUCT
27371-1010	AB6001	Alt. Brush set
2737B-31011	AB6001	Alt. Brush set
2737B-87202	AB6001	Alt. Brush set
28100-1743A	S9040	Starter
28142-1520A	SB6008	Sta. Brush set
2814A-77090	SB6006	Sta. Brush set
28160-1490	SA9004	Starter armature
28252-1250	ABE9020	Bearing
28252-1260	ABE9038	Bearing
28252-1350	ABE9003	Bearing
28252-1520	ABE9020	Bearing
98811-2101	ABE9003	Bearing
98811-5105	ABE9020	Bearing
98811-5107	ABE9020	Bearing
98812-5115	ABE9038	Bearing
98812-5128	ABE9038	Bearing
EH700	S9013	Starter

HITACHI	AS	PRODUCT
107TA9483	A6014	Alternator
1811-1631	SB2013	Sta. Brush set
2108-2305	SB2013	Sta. Brush set
2108-2306	SB2013	Sta. Brush set
2108-4305	SB2013	Sta. Brush set
2108-4306	SB2013	Sta. Brush set
2108-6305	SB2013	Sta. Brush set
2108-6306	SB2013	Sta. Brush set
2114-11111	SA2010	Starter armature
2114-13103	SBH2005	S. Brush holder
2114-13123	SB2002	Sta. Brush set
2114-13123/83121	SB2008	Sta. Brush set
2114-1316	SB2003	Sta. Brush set
2114-15016	SD2014	Drive
2114-15502	ABE9010	Bearing
2114-15505	SD2019	Drive
2114-15507	SD2009	Drive
2114-15511	ABE9010	Bearing
2114-15550	SD2003	Drive
2114-1601	SBU9031	Bushing
2114-17005	SS2003	Starter solenoid
2114-17006	SS2009	Starter solenoid
2114-17505	SS2003	Starter solenoid
2114-17602	SS2003	Starter solenoid
2114-17612	SS2018	Starter solenoid
2114-19003	SB2002	Sta. Brush set
2114-19003/29003	SB2002	Sta. Brush set

HITACHI	AS	PRODUCT
2114-19602	SS2003	Starter solenoid
2114-21100	SA2016	Starter armature
2114-21111	SA2010	Starter armature
2114-23104	SBH2005	S. Brush holder
2114-23106	SBH2002	S. Brush holder
2114-23123	SB2003	Sta. Brush set
2114-23123/33123	SB2003	Sta. Brush set
2114-23124	SB2011	Sta. Brush set
2114-23124/6313	SB2011	Sta. Brush set
2114-23124/83121	SB2011	Sta. Brush set
2114-2315	SB2002	Sta. Brush set
2114-2315/6313	SB2002	Sta. Brush set
2114-25014	SD2005	Drive
2114-25016	SD2022	Drive
2114-25100	SD2003	Drive
2114-25500	SD2019	Drive
2114-25505	SD2019	Drive
2114-2553	SD2019	Drive
2114-25550	SD2004	Drive
2114-25554	SD2013	Drive
2114-27001	SS2009	Starter solenoid
2114-27005	SS2013	Starter solenoid
2114-27501	SS2006	Starter solenoid
2114-27502	SS2013	Starter solenoid
2114-27504	SS2013	Starter solenoid
2114-27602	SS2020	Starter solenoid
2114-27613	SS2011	Starter solenoid
2114-29003	SB2002	Sta. Brush set
2114-29007	SBH2004	S. Brush holder
2114-31009	SA2002	Starter armature
2114-31100	SA2012	Starter armature
2114-31109	SA2016	Starter armature
2114-31200	SA2017	Starter armature
2114-33104	SBH2005	S. Brush holder
2114-33122	SB2001	Sta. Brush set
2114-33122/43133	SB2001	Sta. Brush set
2114-33123	SB2003	Sta. Brush set
2114-3315	SB2002	Sta. Brush set
2114-3315/6313	SB2002	Sta. Brush set
2114-35500	SD2019	Drive
2114-35506	SD2004	Drive
2114-35550	SD2019	Drive
2114-35551	SD2012	Drive
2114-37001	SS2002	Starter solenoid
2114-37003	SS2009	Starter solenoid
2114-37005	SS2010	Starter solenoid
2114-37502	SS2010	Starter solenoid
2114-37503	SS2006	Starter solenoid
2114-37504	SS2003	Starter solenoid
2114-37505	SS2003	Starter solenoid
2114-37602	SS2003	Starter solenoid
2114-37613	SS2007	Starter solenoid
2114-37673	SS2007	Starter solenoid
2114-39001	SBH2004	S. Brush holder
2114-39008	SBH2005	S. Brush holder
2114-40076	SS2009	Starter solenoid
2114-4100	SA2009	Starter armature
2114-41100	SA2009	Starter armature
2114-41106	SA2012	Starter armature
2114-4311	SBH2004	S. Brush holder

HITACHI	AS	PRODUCT
2114-43125	SB2009	Sta. Brush set
2114-43125/53125	SB2009	Sta. Brush set
2114-43125/63125	SB2009	Sta. Brush set
2114-43125/83125	SB2009	Sta. Brush set
2114-4313	SB2001	Sta. Brush set
2114-4313/8312	SB2001	Sta. Brush set
2114-43133	SB2001	Sta. Brush set
2114-45013	SD2005	Drive
2114-45014	SD2009	Drive
2114-4502	SD2019	Drive
2114-45502	ABE9035	Bearing
2114-45504	SD2003	Drive
2114-45508	SD2011	Drive
2114-45511	ABE9010	Bearing
2114-45550	SD2019	Drive
2114-47001	SS2002	Starter solenoid
2114-47005	SS2003	Starter solenoid
2114-47006	SS2009	Starter solenoid
2114-47007	SS2003	Starter solenoid
2114-47503	SS2006	Starter solenoid
2114-47606	SS2003	Starter solenoid
2114-49007	SBH2004	S. Brush holder
2114-51007	SA2003	Starter armature
2114-51106	SA2003	Starter armature
2114-51300	SA2010	Starter armature
2114-53104	SBH2002	S. Brush holder
2114-53105	SBH2002	S. Brush holder
2114-5312	SB2001	Sta. Brush set
2114-5312/5313	SB2001	Sta. Brush set
2114-5312/8313	SB2001	Sta. Brush set
2114-53125	SB2009	Sta. Brush set
2114-53126	SB2010	Sta. Brush set
2114-53126/63126	SB2010	Sta. Brush set
2114-5313	SB2001	Sta. Brush set
2114-5352	SBU9031	Bushing
2114-55002	ABE9010	Bearing
2114-55004	SD2018	Drive
2114-55015	SD2005	Drive
2114-5502	SD2019	Drive
2114-5550	SD2019	Drive
2114-55502	ABE9035	Bearing
2114-55505	SD2019	Drive
2114-55506	SD2004	Drive
2114-55511	ABE9035	Bearing
2114-55550	SD2019	Drive
2114-55552	SD2019	Drive
2114-56013	SS2013	Starter solenoid
2114-57503	SS2003	Starter solenoid
2114-57504	SS2013	Starter solenoid
2114-57508	SS2003	Starter solenoid
2114-57509	SS2003	Starter solenoid
2114-57606	SS2019	Starter solenoid
2114-57610	SS2021	Starter solenoid
2114-59002	SB2003	Sta. Brush set
2114-59002/6315	SB2003	Sta. Brush set
2114-59002/69002	SB2003	Sta. Brush set
2114-61005	SA2003	Starter armature
2114-61104	SA2014	Starter armature

HITACHI	AS	PRODUCT
2114-61106	SA2003	Starter armature
2114-61300	SA2009	Starter armature
2114-63104	SBH2002	S. Brush holder
2114-63121	SB2008	Sta. Brush set
2114-63121/83121	SB2008	Sta. Brush set
2114-63123	SB2008	Sta. Brush set
2114-63123/83121	SB2008	Sta. Brush set
2114-63124	SB2001	Sta. Brush set
2114-63124/83124	SB2001	Sta. Brush set
2114-63125	SB2009	Sta. Brush set
2114-63126	SB2010	Sta. Brush set
2114-6313	SB2002	Sta. Brush set
2114-6315	SB2003	Sta. Brush set
2114-65001	SD2018	Drive
2114-65004	SD2017	Drive
2114-65502	ABE9020	Bearing
2114-67006	SS2009	Starter solenoid
2114-67503	SS2013	Starter solenoid
2114-67504	SS2010	Starter solenoid
2114-67505	SS2006	Starter solenoid
2114-67605	SS2017	Starter solenoid
2114-67610	SS2022	Starter solenoid
2114-69002	SB2003	Sta. Brush set
2114-69002/59002	SB2003	Sta. Brush set
2114-69007	SBH2005	S. Brush holder
2114-69008	SBH2004	S. Brush holder
2114-71004	SA2002	Starter armature
2114-71005	SA2002	Starter armature
2114-71104	SA2002	Starter armature
2114-71105	SA2013	Starter armature
2114-71108	SA2002	Starter armature
2114-73105	SBH2002	S. Brush holder
2114-73122	SB2007	Sta. Brush set
2114-75008	SD2019	Drive
2114-77001	SS2014	Starter solenoid
2114-77004	SS2002	Starter solenoid
2114-77505	SS2013	Starter solenoid
2114-77506	SS2018	Starter solenoid
2114-77507	SS2006	Starter solenoid
2114-77601	SS2016	Starter solenoid
2114-77607	SS2018	Starter solenoid
2114-77608	SS2006	Starter solenoid
2114-79001	SBH2004	S. Brush holder
2114-83102	SBH2005	S. Brush holder
2114-83105	SBH2003	S. Brush holder
2114-8312	SB2001	Sta. Brush set
2114-83121	SB2002	Sta. Brush set
2114-83121/73122	SB2008	Sta. Brush set
2114-83121/83122	SB2012	Sta. Brush set
2114-83121/93122	SB2008	Sta. Brush set
2114-83122	SB2012	Sta. Brush set
2114-83122/83121	SB2012	Sta. Brush set
2114-83124	SB2001	Sta. Brush set
2114-83124/83121	SB2011	Sta. Brush set
2114-83125	SB2009	Sta. Brush set
2114-8313	SB2001	Sta. Brush set
2114-85008	SD2004	Drive
2114-85501	SD2009	Drive
2114-8661	SBU9031	Bushing
2114-8700	SS2009	Starter solenoid
2114-87003	SS2002	Starter solenoid
2114-87008	SS2002	Starter solenoid
2114-87504	SS2006	Starter solenoid
2114-87505	SS2006	Starter solenoid
2114-87507	SS2006	Starter solenoid
2114-89007	SBH2004	S. Brush holder
2114-91001	SA2004	Starter armature
2114-91008	SA2002	Starter armature
2114-91104	SA2003	Starter armature
2114-93102	SBH2005	S. Brush holder
2114-93104	SBH2003	S. Brush holder
2114-93121	SB2002	Sta. Brush set
2114-93121/13123	SB2002	Sta. Brush set
2114-93121/83121	SB2002	Sta. Brush set
2114-93122	SB2002	Sta. Brush set
2114-93122/83121	SB2002	Sta. Brush set
2114-9352	SBU9031	Bushing
2114-95002	SD2017	Drive
2114-95508	SD2005	Drive
2114-95553	SD2004	Drive
2114-97509	SS2014	Starter solenoid
2114-97604	SS2018	Starter solenoid
2114-97612	SS2007	Starter solenoid
2114-T7101	SS2003	Starter solenoid
2114-T7104	SS2003	Starter solenoid
2114-T7106	SS2018	Starter solenoid
2114-T7111	SS2003	Starter solenoid
2114-T7160	SS2018	Starter solenoid
2114-T7306	SS2018	Starter solenoid
2114I-1700	SS2013	Starter solenoid
2114M-4700Y	SS2001	Starter solenoid
2114N-1750	SS2001	Starter solenoid
2114N-4700	SS2001	Starter solenoid
2114N-47004	SS2001	Starter solenoid
2114N-4700Y	SS2001	Starter solenoid
211N-4700Y	SS2001	Starter solenoid
2120-2130	SB2014	Sta. Brush set
2120-25001	SD2002	Drive
2120-25002	SD2002	Drive
2120-3311	SB2014	Sta. Brush set
2120-3312	SB2014	Sta. Brush set
2120-3312/2130-3311	SB2014	Sta. Brush set
2120-3500	SD2001	Drive
2120-35001	SD2001	Drive
2120-3500A	SD2001	Drive
2120-37002	SS2004	Starter solenoid
2120-37003	SS2004	Starter solenoid
2120-45001	SD2023	Drive
2120-45002	SD2002	Drive
2120-47002	SS2004	Starter solenoid
2120-55002	SD2002	Drive
2120-57002	SS2004	Starter solenoid
2120-67002	SS2004	Starter solenoid
2120-7500	SD2001	Drive
2120-75002	SD2002	Drive
2120-7530	SD2001	Drive
2120-7550	SD2001	Drive
2120-85001	SD2002	Drive
2120-85002	SD2002	Drive
2120-9500	SD2002	Drive
2120-97001	SS2004	Starter solenoid
2120M-5700Y	SS2001	Starter solenoid
2120M-8700Y	SS2001	Starter solenoid
2130-11001	SA2007	Starter armature
2130-1101	SA2006	Starter armature
2130-13022	SBH2001	S. Brush holder
2130-1306	SBH2001	S. Brush holder
2130-13111	SB2005	Sta. Brush set
2130-13111/3315	SB2005	Sta. Brush set
2130-13111/7312	SB2005	Sta. Brush set
2130-1312	SB2014	Sta. Brush set
2130-1312/3311	SB2014	Sta. Brush set
2130-15005	SD2010	Drive
2130-1509	ABE9020	Bearing
2130-15505	SD2010	Drive
2130-17002	SS2005	Starter solenoid
2130-21003	SA2001	Starter armature
2130-2250	SB2004	Sta. Brush set
2130-2302	ABE9034	Bearing
2130-2306	SBH2001	S. Brush holder
2130-23112	SB2006	Sta. Brush set
2130-23112/73111	SB2006	Sta. Brush set
2130-2312	SB2014	Sta. Brush set
2130-25001	SD2002	Drive
2130-25002	SD2002	Drive
2130-25005	SD2020	Drive
2130-27001	SS2005	Starter solenoid
2130-27003	SS2014	Starter solenoid
2130-31002	SA0026	Starter armature
2130-31003	SA2001	Starter armature
2130-31004	SA2007	Starter armature
2130-3311	SB2014	Sta. Brush set
2130-3315	SB2005	Sta. Brush set
2130-35001	SD2001	Drive
2130-35004	SD2016	Drive
2130-35009	SD2008	Drive
2130-3509	ABE9010	Bearing
2130-37003	SS2002	Starter solenoid
2130-41003	SA2008	Starter armature
2130-41004	SA2001	Starter armature
2130-4102	SA2001	Starter armature
2130-4311	SB2014	Sta. Brush set
2130-43111	SB2006	Sta. Brush set
2130-43112	SB2006	Sta. Brush set
2130-4312	SB2014	Sta. Brush set
2130-4312/7311	SB2014	Sta. Brush set
2130-4502	SD2019	Drive
2130-47001	SS2002	Starter solenoid
2130-47012	SS2005	Starter solenoid
2130-51002	SA2001	Starter armature
2130-51003	SA2001	Starter armature
2130-53021	SBH2001	S. Brush holder
2130-53022	SBH2001	S. Brush holder
2130-53112	SB2006	Sta. Brush set
2130-5312	SB2004	Sta. Brush set
2130-5312/2250	SB2004	Sta. Brush set

HITACHI	AS	PRODUCT
2130-5312/8311	SB2004	Sta. Brush set
2130-5312/9312	SB2004	Sta. Brush set
2130-5500	SD2006	Drive
2130-55005	SD2023	Drive
2130-5502	SD2019	Drive
2130-57001	SS2014	Starter solenoid
2130-57003	SS2015	Starter solenoid
2130-57005	SS2015	Starter solenoid
2130-61003	SA2001	Starter armature
2130-61004	SA2011	Starter armature
2130-63022	SBH2001	S. Brush holder
2130-63112	SB2006	Sta. Brush set
2130-65002	SD2023	Drive
2130-65008	SD2009	Drive
2130-6502	SD2019	Drive
2130-6700	SS2005	Starter solenoid
2130-67005	SS2008	Starter solenoid
2130-73021	SBH2001	S. Brush holder
2130-73022	SBH2001	S. Brush holder
2130-7311	SB2014	Sta. Brush set
2130-73111	SB2006	Sta. Brush set
2130-73112	SB2006	Sta. Brush set
2130-7312	SB2005	Sta. Brush set
2130-7500	SD2006	Drive
2130-75002	SD2008	Drive
2130-75003	SD2008	Drive
2130-75004	SD2009	Drive
2130-7502	SD2019	Drive
2130-7550	SD2001	Drive
2130-75504	SD2008	Drive
2130-77001	SS2014	Starter solenoid
2130-77005	SS2008	Starter solenoid
2130-8311	SB2004	Sta. Brush set
2130-85003	SD2008	Drive
2130-85004	SD2008	Drive
2130-87007	SS2003	Starter solenoid
2130-91002	SA2001	Starter armature
2130-93021	SBH2001	S. Brush holder
2130-9305	SBH2001	S. Brush holder
2130-9312	SB2004	Sta. Brush set
2130-95007	SD2009	Drive
2130-97003	SS2003	Starter solenoid
2130-97006	SS2014	Starter solenoid
2130-97008	SS2008	Starter solenoid
2140-1500	SD2020	Drive
2140-15003	SD2020	Drive
2140-1502	SD2019	Drive
2140-15026	SD2019	Drive
2144-83121	SB2002	Sta. Brush set
2170-1325	AB2001	Alt. Brush set
2214-25550	SD2004	Drive
2240-1310	SBH2001	S. Brush holder
2240-1311	SB2005	Sta. Brush set
2240-1311/1312	SB2005	Sta. Brush set
2240-1312	SB2005	Sta. Brush set
2240-2100	SA2015	Starter armature
2240-2101	ABE9035	Bearing
2240-2310	SBH2001	S. Brush holder
2240-2501	SD2024	Drive
2240-3310	SBH2001	S. Brush holder
2240-6501	SD2024	Drive
2250-21001	SA2005	Starter armature
2250-25002	SD2002	Drive
2250-25003	SD2015	Drive
2250-25004	SD2015	Drive
2250-3323	SB2004	Sta. Brush set
2250-35001	SD2002	Drive
2250-35002	SD2001	Drive
2250-35004	SD2002	Drive
2250-45003	SD2006	Drive
2250-45004	SD2015	Drive
2250-5322	SB2004	Sta. Brush set
2250-5323	SB2004	Sta. Brush set
2250-550	SD2023	Drive
2250-55002	SD2002	Drive
2250-6323	SB2004	Sta. Brush set
2250-6500	SD2023	Drive
2250-71002	SA2005	Starter armature
2250-7323	SB2004	Sta. Brush set
2250-7500	SD2023	Drive
2250-8323	SB2004	Sta. Brush set
2250-85004	SD2006	Drive
2250-85005	SD2015	Drive
2250-95001	SD2015	Drive
2250-95003	SD2002	Drive
2270-3100	SA2005	Starter armature
2270-3502	SBU9031	Bushing
2270-8500	SD2015	Drive
2280-3500	SD2023	Drive
23151-6N20A	AFP2001	FW pulley
23378-10G100	SBH2001	S. Brush holder
6000G	ABE9015	Bearing
6000HC	ABE9015	Bearing
6000HL	ABE9015	Bearing
6000J	ABE9019	Bearing
6000TR	ABE9015	Bearing
6201D	ABE9002	Bearing
6201GNC	ABE9002	Bearing
6201H	ABE9002	Bearing
6201SD	ABE9002	Bearing
6202BD	ABE9003	Bearing
6202BM	ABE9003	Bearing
6202E	ABE9003	Bearing
6202G	ABE9003	Bearing
6202LLBC3	ABE9037	Bearing
6202MM	ABE9003	Bearing
6202NCDG	ABE9030	Bearing
6202NCT	ABE9030	Bearing
6202SD	ABE9003	Bearing
6202V	ABE9003	Bearing
6202VV	ABE9003	Bearing
6203G	ABE9004	Bearing
6203SS	ABE9004	Bearing
6203Z	ABE9004	Bearing
6302B	ABE9005	Bearing
6302BM	ABE9005	Bearing
6302BP	ABE9005	Bearing
6303MM	ABE9006	Bearing
6303R	ABE9006	Bearing
6303RD	ABE9006	Bearing
9402-1408	SB2001	Sta. Brush set
9402-1409	SB2001	Sta. Brush set
FOR LR260-512	ARC2030	Rectifier
GD214998	AFP0010	FW pulley
GD215541	AFP2003	FW pulley
GD216009	AFP2001	FW pulley
GD216009-2	AFP2001	FW pulley
GD216099	AFP2001	FW pulley
GD218089	AFP2002	FW pulley
L1100G-1200	AS2006	Stator
L1100G-1325	AB2002	Alt. Brush set
L1100G-2200	AP2002	Pulley
L1100G-2500	AP2002	Pulley
L1100G-3340	ARE2011	Regulator
L1100G-5320	ARC2028	Rectifier
L1100G-6340	ARE2036	Regulator
L1100G-7340	ARE2026	Regulator
L1100G-7500	AFP2001	FW pulley
L1100G-8340	ARE2019	Regulator
L1100G-9340	ARE2011	Regulator
L110G-8340	ARE2019	Regulator
L1110-1325	AB2002	Alt. Brush set
L1110G-25001	AFP2001	FW pulley
L1110G-3340	ARE2011	Regulator
L1110G-33402	ARE2011	Regulator
L1110G-4320	ARC2022	Rectifier
L1110G-43402	ARE2019	Regulator
L1110G-53402	ARE2019	Regulator
L1110G-6320	ARC2022	Rectifier
L1110G-7500	AFP2001	FW pulley
L1110G-9340	ARE2011	Regulator
L1125G-1340	ARE2011	Regulator
L1125G-2320	ARC2022	Rectifier
L119N-1361	AB2006	Alt. Brush set
L120-13202	AB2005	Alt. Brush set
L120-13262	AB2005	Alt. Brush set
L125N-13251	AB2005	Alt. Brush set
L125N-13261	AB2005	Alt. Brush set
L130M-1330	ARC2012	Rectifier
L135-13203	ARC2015	Rectifier
L135-13208	ARC2015	Rectifier
L135-3320	ARC2015	Rectifier
L135-6320	ARC2014	Rectifier
L135-6326	AB2005	Alt. Brush set
L140-13202	ARC2011	Rectifier
L140-23201	ARC2012	Rectifier
L140-53201	ARC2013	Rectifier
L140-53202	ARC2011	Rectifier
L140-93202	ARC2005	Rectifier
L150-13203	ARC2001	Rectifier
L150-13204	ARC2002	Rectifier
L150-13205	ARC2006	Rectifier
L150-13206	ARC2005	Rectifier
L150-13230	ARC2001	Rectifier
L150-13251	AB2005	Alt. Brush set
L150-23251	AB2001	Alt. Brush set
L150-23252	AB2001	Alt. Brush set
L150-23321	AB2001	Alt. Brush set
L150-33155	ARE2004	Regulator
L150-43202	ARC2023	Rectifier
L150-43203	ARC2011	Rectifier
L150-63601	ARE2001	Regulator
L150-73203	ARC2005	Rectifier
L150-73251	AB2005	Alt. Brush set
L150-83201	ARC2011	Rectifier
L150-83202	ARC2011	Rectifier

HITACHI	AS	PRODUCT
L150-83251	AB2001	Alt. Brush set
L150-93155	ARE2001	Regulator
L150M-13201	ARC2007	Rectifier
L150M-13202	ARC2007	Rectifier
L150N-13261	AB2005	Alt. Brush set
L155M-13202	ARC2007	Rectifier
L160-13202	ARC2011	Rectifier
L160-13203	ARC2001	Rectifier
L160-1331	AB2003	Alt. Brush set
L160-13351	ARD9001	Diode
L160-23153	ARE2001	Regulator
L160-23201	ARC2004	Rectifier
L160-23202	ARC2009	Rectifier
L160-25001	AP2001	Pulley
L160-31007	AR2002	Rotor
L160-32001	AS2001	Stator
L160-3320	ARC2001	Rectifier
L160-33202	ARC2008	Rectifier
L160-33203	ARC2001	Rectifier
L160-43154	ARE2012	Regulator
L160-4320	ARC2011	Rectifier
L160-43201	ARC2004	Rectifier
L160-43202	ARC2009	Rectifier
L160-45003	AP2001	Pulley
L160-5320	ARC2001	Rectifier
L160-53202	ARC2011	Rectifier
L160-62001	AS2001	Stator
L160-63153	ARE2001	Regulator
L160-6320	ARC2005	Rectifier
L160-7320	ARC2011	Rectifier
L160-73202	ARC2008	Rectifier
L160-9320	ARC2005	Rectifier
L160-93201	ARC2011	Rectifier
L16053201	ARC2018	Rectifier
L160G-2315	ARE2036	Regulator
L160G-53201	ARC2032	Rectifier
L160G-9320	ARC2032	Rectifier
L165-3320	ARC2025	Rectifier
L165G-1320	ARC2019	Rectifier
L165G-2315	ARE2015	Regulator
L165G-2320	ARC2018	Rectifier
L165G-3320	ARC2018	Rectifier
L165G-9320	ARC2021	Rectifier
L170-12001	AS2001	Stator
L170-1315	ARE2028	Regulator
L170-13151	ARE2012	Regulator
L170-1325	AB2004	Alt. Brush set
L170-22002	AS2002	Stator
L170-23152	ARE2021	Regulator
L170-23203	ARC2031	Rectifier
L170-2325	AB2002	Alt. Brush set
L170-33152	ARE2014	Regulator
L170-33202	ARC2024	Rectifier
L170-43151	ARE2027	Regulator
L170-43202	ARC2017	Rectifier
L170-4325	AB2002	Alt. Brush set
L170-53151	ARE2012	Regulator
L170-5320	ARC2011	Rectifier
L170-61002	AR2001	Rotor
L170-81002	AR2001	Rotor
L170-95001	AP2001	Pulley
L170G-1100	AR2001	Rotor
L170G-1315	ARE2006	Regulator
L170G-1320	ARC2019	Rectifier
L170G-13201	ARC2021	Rectifier
L170G-1325	AB2002	Alt. Brush set
L170G-2320	ARC2018	Rectifier
L170G-23203	ARC2016	Rectifier
L170G-25001	AP2001	Pulley
L170G-25003	AFP2003	FW pulley
L170G-3319	ARE2009	Regulator
L170G-33202	ARC2009	Rectifier
L170G-41001	AR2001	Rotor
L170G-41002	AR2003	Rotor
L170G-45002	AP2002	Pulley
L170G-51001	AR2001	Rotor
L170G-5315	ARE2017	Regulator
L170G-53203	ARC2021	Rectifier
L170G-6200	AS2003	Stator
L170G-6308	ARE2009	Regulator
L170G-6315	ARE2017	Regulator
L170G-63201	ARC2011	Rectifier
L170G-7315	ARE2009	Regulator
L170G-9200	AS2003	Stator
L180-1200	AS2001	Stator
L180-1325	AB2002	Alt. Brush set
L180-1335	AB2005	Alt. Brush set
L180-2320	ARC2026	Rectifier
L180-3315	ARE2020	Regulator
L180-6320	ARC2026	Rectifier
L180-7315	ARE2029	Regulator
L180-8315	ARE2013	Regulator
L180G-1330	ABH2001	A. Brush holder
L180G-2315	ARE2034	Regulator
L180G-2340	ARE2015	Regulator
L180G-23401	ARE2017	Regulator
L180G-2341	ARE2036	Regulator
L180G-3340	ARE2036	Regulator
L180G-33401	ARE2036	Regulator
L180G-5340	ARE2022	Regulator
L180G-53401	ARE2036	Regulator
L180G-6340	ARE2015	Regulator
L180G-7340	ARE2015	Regulator
L180G-9340	ARE2022	Regulator
L185G-2340	ARE2016	Regulator
L190-3315	ARE2020	Regulator
L190-4315	ARE2023	Regulator
L190G-33201	ARC2027	Rectifier
L190G-3340	ARE2036	Regulator
L190G-33401	ARE2026	Regulator
L190G-4340	ARE2026	Regulator
L190G-5340	ARE2026	Regulator
L190G-73204	ARC2028	Rectifier
L190G-83204	ARC2027	Rectifier
L190G-93202	ARC2028	Rectifier
L225-13251	AB2001	Alt. Brush set
L225-13261	AB2001	Alt. Brush set
L225-4320	ARC2011	Rectifier
L225-53151	ARE2005	Regulator
L225-6320	ARC2011	Rectifier
L225-9315	ARE2035	Regulator
L225G-1325	AB2005	Alt. Brush set
LR1100-501	A2016	Alternator
LR1100-501B	A2016	Alternator
LR1100-502	A2003	Alternator
LR1100-502B	A2003	Alternator
LR1100-502C	A2003	Alternator
LR1100-502D	A2003	Alternator
LR1100-502E	A2003	Alternator
LR1100-502F	A2003	Alternator
LR1100-502G	A2003	Alternator
LR1100-502H	A2003	Alternator
LR1100-502J	A2003	Alternator
LR1100-502K	A2003	Alternator
LR1100-502L	A2003	Alternator
LR1100-502M	A2003	Alternator
LR1100-502N	A2003	Alternator
LR1100-503	A2038	Alternator
LR1100-503B	A2038	Alternator
LR1100-503C	A2038	Alternator
LR1100-503E	A2038	Alternator
LR1100-503F	A2038	Alternator
LR1100-504C	A2003	Alternator
LR1100-504E	A2003	Alternator
LR1100-505	A2003	Alternator
LR1100-505B	A2003	Alternator
LR1100-505E	A2003	Alternator
LR1100-507	A2022	Alternator
LR1100-507B	A2022	Alternator
LR1100-507C	A2022	Alternator
LR1100-508	A2022	Alternator
LR1100-508B	A2022	Alternator
LR1100-508C	A2022	Alternator
LR1100-508E	A2022	Alternator
LR1100-508F	A2022	Alternator
LR1110-705	A2008	Alternator
LR1110-705B	A2008	Alternator
LR1110-709	A2008	Alternator
LR1110-709B	A2008	Alternator
LR1110-710C	A2008	Alternator
LR1110-710F	A2008	Alternator
LR1110-720	A2008	Alternator
LR1110-723	A2008	Alternator
LR1110-723B	A2008	Alternator
LR1110-723C	A2008	Alternator
LR1110-723E	A2008	Alternator
LR1120-701	A0059	Alternator
LR120-701	A0059	Alternator
LR140-128	A5028	Alternator
LR140-136	A5028	Alternator
LR150-101	A2036	Alternator
LR150-101B	A2036	Alternator
LR150-125	A2036	Alternator
LR150-125B	A2036	Alternator
LR150-136	A2028	Alternator
LR150-136B	A2028	Alternator
LR150-136C	A2028	Alternator
LR150-136E	A2028	Alternator
LR150-201	A2028	Alternator
LR150-201B	A2028	Alternator
LR150-205	A2028	Alternator
LR150-205B	A2028	Alternator
LR150-31	A2036	Alternator
LR150-35	A2036	Alternator
LR150-36	A2036	Alternator
LR150-421	A2004	Alternator

HITACHI	AS	PRODUCT
LR150-421C	A2004	Alternator
LR150-428	A2012	Alternator
LR150-428C	A2012	Alternator
LR150-428E	A2012	Alternator
LR150-428S	A2012	Alternator
LR150-428T	A2012	Alternator
LR150-431	A2027	Alternator
LR150-432	A2027	Alternator
LR150-434	A2004	Alternator
LR150-434B	A2004	Alternator
LR150-438	A2027	Alternator
LR150-438B	A2027	Alternator
LR150-439	A2027	Alternator
LR150-439B	A2027	Alternator
LR150-441	A2004	Alternator
LR150-441C	A2004	Alternator
LR150-441E	A2004	Alternator
LR150-442	A2004	Alternator
LR150-442B	A2004	Alternator
LR150-443S	A2012	Alternator
LR150-443T	A2012	Alternator
LR150-444	A2004	Alternator
LR150-444B	A2004	Alternator
LR150-448	A2004	Alternator
LR150-449	A2004	Alternator
LR150-449B	A2004	Alternator
LR150-449C	A2004	Alternator
LR150-453	A2004	Alternator
LR150-453B	A2004	Alternator
LR150-52	A2036	Alternator
LR150-53	A2036	Alternator
LR150-98	A2036	Alternator
LR150-98B	A2036	Alternator
LR150-98E	A2036	Alternator
LR150-99	A2036	Alternator
LR150-99B	A2036	Alternator
LR155-418	A2027	Alternator
LR155-418B	A2027	Alternator
LR155-419	A2027	Alternator
LR155-419B	A2027	Alternator
LR160-140	A2034	Alternator
LR160-151	A2034	Alternator
LR160-154	A2034	Alternator
LR160-168	A2034	Alternator
LR160-426	A2033	Alternator
LR160-426E	A2033	Alternator
LR160-426S	A2033	Alternator
LR160-426T	A2033	Alternator
LR160-427	A2033	Alternator
LR160-427C	A2033	Alternator
LR160-427S	A2033	Alternator
LR160-427T	A2033	Alternator
LR160-446	A2025	Alternator
LR160-446B	A2025	Alternator
LR160-446C	A2025	Alternator
LR160-446E	A2025	Alternator
LR160-728	A2035	Alternator
LR160-728B	A2035	Alternator
LR160-728C	A2035	Alternator
LR160-728E	A2035	Alternator
LR160-728F	A2035	Alternator
LR165-707	A5013	Alternator
LR165-707B	A5013	Alternator
LR165-708	A2031	Alternator
LR165-708B	A2031	Alternator
LR165-708C	A2031	Alternator
LR165-711	A2007	Alternator
LR165-711B	A2007	Alternator
LR165-714	A2030	Alternator
LR170-406	A2015	Alternator
LR170-406B	A2015	Alternator
LR170-406C	A2015	Alternator
LR170-406E	A2015	Alternator
LR170-406F	A2015	Alternator
LR170-407	A2014	Alternator
LR170-407E	A2014	Alternator
LR170-407S	A2014	Alternator
LR170-407T	A2014	Alternator
LR170-408	A2014	Alternator
LR170-408B	A2014	Alternator
LR170-408C	A2014	Alternator
LR170-408S	A2014	Alternator
LR170-408T	A2014	Alternator
LR170-411	A2020	Alternator
LR170-411B	A2020	Alternator
LR170-411C	A2020	Alternator
LR170-411D	A2020	Alternator
LR170-411E	A2020	Alternator
LR170-411F	A2020	Alternator
LR170-411P	A2020	Alternator
LR170-414	A2015	Alternator
LR170-414B	A2015	Alternator
LR170-414C	A2015	Alternator
LR170-414E	A2015	Alternator
LR170-415	A2026	Alternator
LR170-415B	A2026	Alternator
LR170-415C	A2026	Alternator
LR170-417	A2009	Alternator
LR170-417B	A2009	Alternator
LR170-417C	A2009	Alternator
LR170-417E	A2009	Alternator
LR170-417F	A2009	Alternator
LR170-420	A2005	Alternator
LR170-420B	A2005	Alternator
LR170-427	A2005	Alternator
LR170-427B	A2005	Alternator
LR170-427BA	A2005	Alternator
LR170-427C	A2005	Alternator
LR170-502	A2009	Alternator
LR170-502B	A2009	Alternator
LR170-502C	A2009	Alternator
LR170-502P	A2009	Alternator
LR170-502Q	A2009	Alternator
LR170-504	A2009	Alternator
LR170-504B	A2009	Alternator
LR170-505	A2001	Alternator
LR170-505B	A2001	Alternator
LR170-509C	A2011	Alternator
LR170-509E	A2011	Alternator
LR170-509F	A2011	Alternator
LR170-509G	A2011	Alternator
LR170-509H	A2011	Alternator
LR170-511	A2001	Alternator
LR170-511B	A2001	Alternator
LR170-738	A2031	Alternator
LR170-738B	A2031	Alternator
LR170-738C	A2031	Alternator
LR170-738E	A2031	Alternator
LR170-746	A2007	Alternator
LR170-746B	A2007	Alternator
LR170-746C	A2007	Alternator
LR170-746E	A2007	Alternator
LR170-746F	A2007	Alternator
LR170-746G	A2007	Alternator
LR170-746J	A2007	Alternator
LR170-746K	A2007	Alternator
LR170-746M	A2007	Alternator
LR170-748B	A2007	Alternator
LR170-750	A2007	Alternator
LR170-750B	A2007	Alternator
LR170-750C	A2007	Alternator
LR170-768	A2030	Alternator
LR170G-7315	ARE2009	Regulator
LR180-501	A2032	Alternator
LR180-501B	A2032	Alternator
LR180-501C	A2032	Alternator
LR180-504	A2032	Alternator
LR180-725	A2024	Alternator
LR180-725B	A2024	Alternator
LR180-725C	A2024	Alternator
LR180-725E	A2024	Alternator
LR180-736	A2024	Alternator
LR180-736B	A2024	Alternator
LR180-736C	A2024	Alternator
LR180-737B	A2024	Alternator
LR180-737C	A2024	Alternator
LR180-751	A2006	Alternator
LR180-751B	A2006	Alternator
LR180-762	A2006	Alternator
LR180-762B	A2006	Alternator
LR180-768	A2006	Alternator
LR180-8315	ARE2013	Regulator
LR190-734	A2021	Alternator
LR190-734B	A2021	Alternator
LR190-734C	A2021	Alternator
LR190-734E	A2021	Alternator
LR190-734G	A2021	Alternator
LR190-734H	A2021	Alternator
LR190-747	A2029	Alternator
LR190-750	A2037	Alternator
LR190-750B	A2037	Alternator
LR190-752	A2023	Alternator
LR190-752B	A2023	Alternator
LR225-408	A2010	Alternator
LR225-408B	A2010	Alternator
LR225-408C	A2010	Alternator
LR225-408E	A2010	Alternator
LR225-409	A2010	Alternator
LR225-409B	A2010	Alternator
LR225-409E	A2010	Alternator
LR235-402	A2013	Alternator
LR235-404	A2013	Alternator
LR235-404C	A2013	Alternator
LR235-404S	A2013	Alternator
LR235-404T	A2013	Alternator
LR250-503	A2017	Alternator

HITACHI	AS	PRODUCT
LR260-502	A2018	Alternator
LR260-512	A2019	Alternator
Q05B	ARD9046	Diode
Q05B-00	ARD9046	Diode
Q06B	ARD9045	Diode
Q06B-00	ARD9045	Diode
S114-203	S2020	Starter
S114-357	S2015	Starter
S114-357A	S2015	Starter
S114-357B	S2015	Starter
S114-357C	S2015	Starter
S114-443	S2019	Starter
S114-443A	S2019	Starter
S114-481	S2002	Starter
S114-481A	S2002	Starter
S114-501	S0015	Starter
S114-501A	S0015	Starter
S114-505	S5025	Starter
S114-520	S2016	Starter
S114-520B	S2016	Starter
S114-523	S5017	Starter
S114-528	S2018	Starter
S114-528A	S2018	Starter
S114-530	S2016	Starter
S114-533	S2016	Starter
S114-534	S2016	Starter
S114-535	S2017	Starter
S114-553	S0072	Starter
S114-553A	S0072	Starter
S114-569	S2017	Starter
S114-630	S2017	Starter
S114-653	S2019	Starter
S114-653A	S2019	Starter
S114-653B	S2019	Starter
S114-656	S2020	Starter
S114-656A	S2020	Starter
S114-750	S2016	Starter
S114-758	S2016	Starter
S114-766	S2016	Starter
S114-766A	S2016	Starter
S114-769	S2017	Starter
S114-769A	S2017	Starter
S114-800	S2016	Starter
S114-800A	S2016	Starter
S114-800B	S2016	Starter
S114-802	S2016	Starter
S114-802A	S2016	Starter
S114-804	S2011	Starter
S114-804A	S2011	Starter
S114-806	S2011	Starter
S114-806A	S2011	Starter
S114-808	S2002	Starter
S114-808A	S2002	Starter
S114-808B	S2002	Starter
S114-829	S2001	Starter
S114-829A	S2001	Starter
S114-829B	S2001	Starter
S114-830	S2013	Starter
S114-850	S2004	Starter
S114-850A	S2004	Starter
S114-850B	S2004	Starter
S114-850C	S2004	Starter

HITACHI	AS	PRODUCT
S114-869	S2001	Starter
S114-902	S2014	Starter
S114-902A	S2014	Starter
S114-903	S4028	Starter
S114-903A	S4028	Starter
S114-905	S4025	Starter
S114-906	S4025	Starter
S114-907	S0088	Starter
S114-922	S2014	Starter
S114-925	S2001	Starter
S114-938	S4025	Starter
S114-943	S4025	Starter
S12-84	S4011	Starter
S12-85	S4018	Starter
S12-87	S4018	Starter
S13-105	S2015	Starter
S13-105A	S2015	Starter
S13-106	S2007	Starter
S13-106A	S2007	Starter
S13-106B	S2007	Starter
S13-106C	S2007	Starter
S13-106E	S2007	Starter
S13-107	S2005	Starter
S13-107A	S2005	Starter
S13-112	S6022	Starter
S13-112A	S6022	Starter
S13-114	S6022	Starter
S13-114A	S6022	Starter
S13-122	S2009	Starter
S13-126	S2009	Starter
S13-126A	S2009	Starter
S13-127	S2007	Starter
S13-127A	S2007	Starter
S13-127C	S2007	Starter
S13-210	S6022	Starter
S13-210B	S2010	Starter
S13-210C	S2010	Starter
S13-212	S2007	Starter
S13-213	S2007	Starter
S13-289	S2006	Starter
S13-289A	S2006	Starter
S13-305	S2015	Starter
S13-305A	S2015	Starter
S13-322	S2009	Starter
S13-326	S2009	Starter
S13-327	S2007	Starter
S13-514	S2010	Starter
S13-527B	S2012	Starter
S13-556	S2012	Starter
S13-61	S9045	Starter
S13-61A	S9045	Starter
S13-73	S9021	Starter
S13-74	S9021	Starter
S13-82B	S6004	Starter
S13-89	S2006	Starter
S13-89A	S2006	Starter
S13-89B	S2006	Starter
S13-89C	S2006	Starter
S13-89D	S2006	Starter
S13-91	S0043	Starter
S13-91A	S0043	Starter
S14-03	S2010	Starter

HITACHI	AS	PRODUCT
S14-203	S6022	Starter
S14-210	S2010	Starter
S14-210A	S2010	Starter
S24-01	S5052	Starter
S24-01B	S5052	Starter
S24-01C	S5052	Starter
S24-01D	S5052	Starter
S24-03	S2003	Starter
S24-03A	S2003	Starter
S24-03B	S2003	Starter
S24-03C	S2003	Starter
S24-13	S2003	Starter
S25-103	S6027	Starter
S25-120	S2003	Starter
S25-120A	S2003	Starter
S25-125	S5052	Starter
S25-125A	S5052	Starter
S25-125B	S5052	Starter
S25-163	S2008	Starter
S25-163A	S2008	Starter
S25-163B	S2008	Starter
S25-163C	S2008	Starter
S25-302	S5052	Starter
S25-303	S5052	Starter
S25-303A	S5052	Starter
S25-308	S2022	Starter
S25-308A	S2022	Starter
S25-501	S2022	Starter
S25-5015	S2022	Starter
S25-501A	S2022	Starter
S25-505	S2022	Starter
S25-505E	S2022	Starter
S25-505G	S2022	Starter
TL1Z-58D	ARE6016	Regulator
TR1Z-108	ARE2024	Regulator
TR1Z-108B	ARE2024	Regulator
TR1Z-123	ARE2031	Regulator
TR1Z-210A	ARE2010	Regulator
TR1Z-210B	ARE2010	Regulator
TR1Z-24	ARE2002	Regulator
TR1Z-27	ARE2002	Regulator
TR1Z-33	ARE2002	Regulator
TR1Z-34	ARE2002	Regulator
TR1Z-37	ARE2002	Regulator
TR1Z-43	ARE2003	Regulator
TR1Z-47	ARE2002	Regulator
TR1Z-48	ARE2002	Regulator
TR1Z-53	ARE2003	Regulator
TR1Z-56	ARE2002	Regulator
TR1Z-62	ARE2003	Regulator
TR1Z-64	ARE2003	Regulator
TR1Z-64A	ARE2003	Regulator
TR1Z-65	ARE2002	Regulator
TR2Z-37	ARE2007	Regulator
TR2Z-49	ARE2007	Regulator
for LR260-512	AS2004	Stator
for alternator LR260-512	AR2004	Rotor

HONDA	AS	PRODUCT
04314-P08-014	ARE5045	Regulator
31100-P04-G01	A5026	Alternator
31100-P04-G03	A5026	Alternator

HONDA	AS	PRODUCT
31100-P04-G034	A5026	Alternator
31100-P04-G05	A5026	Alternator
31100-P05-C04	A5026	Alternator
31100-P1K-E03	A5026	Alternator
31100-P1K-E05	A5026	Alternator
31100-PE0-921	ARE6018	Regulator
31100-PLZ-D00	A2003	Alternator
31100-PM5-A01	ARE6011	Regulator
31100-PM8-A01	ARE6011	Regulator
31100-PP4-E03	A0155	Alternator
31100-PR5-0030	A5026	Alternator
31127-BYE-003	ARC6017	Rectifier
31127-PD2-0140	ARC6005	Rectifier
31127-PEO-0340	ARC5002	Rectifier
31127-PT0-003	ARC6012	Rectifier
31127-PTO-003	ARC6002	Rectifier
31127-PY3-003	ARC6017	Rectifier
31127-PY3-0030	ARC6017	Rectifier
31144-516-004	AB6001	Alt. Brush set
31150-P2T-0030	ARE6015	Regulator
31150-PD1-004	ARE6001	Regulator
31150-PD2-004	ARE6001	Regulator
31150-PD6-004	ARE6006	Regulator
31150-PD6-014	ARE6006	Regulator
31150-PD6-024	ARE6006	Regulator
31150-PDJ-004	ARE6001	Regulator
31150-PE0-003	ARE6004	Regulator
31150-PE0-921	ARE6018	Regulator
31150-PE7-661	ARE6005	Regulator
31150-PE7-6620	ARE6005	Regulator
31150-PEO-921	ARE6018	Regulator
31150-PH3-013	ARE6006	Regulator
31150-PM5-0040	ARE5045	Regulator
31150-PT2-003	ARE6022	Regulator
31150-PYM-004	ARE5047	Regulator
31150-RAA-A010M	ARE6039	Regulator
31150-RAA-A030M	ARE6039	Regulator
31200-P1J-E01	S3063	Starter
31200-P1J-E010	S3063	Starter
31200-P1J-E03	S3063	Starter
31200-P1J-S010	S3063	Starter
31200-RAA-A51	S9039	Starter
31200-RAA-A52	S9039	Starter
31200-RBD-E01	S5056	Starter
31200-RNA-A51	S9038	Starter
31204-634-670	SS2009	Starter solenoid
31204-634-671	SS2009	Starter solenoid
31204-657-671	SD6012	Drive
31204-PA5-911	SS6004	Starter solenoid
31204-PA5-991	SS6004	Starter solenoid
31204-PC1-004	SS6004	Starter solenoid
31204-PD1-003	SD9030	Drive
31204-PD4-005	SS2013	Starter solenoid
31204-PM3-J010M	SD6027	Drive
31207-634-005	SD2018	Drive
31207-657-006	SD6001	Drive
31207-657-671	SA6004	Starter armature
31208-657-040	SB6001	Sta. Brush set
31208-657-300	SB6001	Sta. Brush set
31209-590-004	SB6002	Sta. Brush set

HONDA	AS	PRODUCT
31210-P0A-004	SS9015	Starter solenoid
31210-P2A-004	SS9013	Starter solenoid
31210-P2C-004	SS9013	Starter solenoid
31210-PA0-006	SB6002	Sta. Brush set
31210-PAA-A02	SS9015	Starter solenoid
31210-PC2-016	SS9008	Starter solenoid
31210-PD2-006	SS9008	Starter solenoid
31210-PD2-016	SS9008	Starter solenoid
31210-PD2-026	SS9008	Starter solenoid
31210-PT0-01	SS9016	Starter solenoid
31211-PH9-004	SB6005	Sta. Brush set
31215-634-005	SB2002	Sta. Brush set
31216-634-005	SB2002	Sta. Brush set
31231-PA0-060	SB6002	Sta. Brush set
AHG023	S5056	Starter
AHGA17	A5026	Alternator
AHGA18	A5026	Alternator
CJN42	A5026	Alternator
CJQ20	A5026	Alternator
GA2A3660	ARE6049	Regulator
MHG020	S5056	Starter
MHG023	S5056	Starter

HUCO	AS	PRODUCT
130001	ARE1001	Regulator
130004	ARE1010	Regulator
130007	ARE1009	Regulator
130011	ARE1007	Regulator
130015	ARE1016	Regulator
130016	ARE1017	Regulator
130017	ARE1008	Regulator
130018	ARE1002	Regulator
130019	ARE1005	Regulator
130020	ARE1006	Regulator
130024	ARE1019	Regulator
130040	ARE9004	Regulator
130330	ARE3014	Regulator
130340	ARE3003	Regulator
130341	ARE3004	Regulator
130344	ARE3011	Regulator
130346	ARE3004	Regulator
130356	ARE3004	Regulator
130361	ARE3048	Regulator
130372	ARE3025	Regulator
130374	ARE3013	Regulator
130386	ARE3004	Regulator
130390	ARE3003	Regulator
130394	ARE3011	Regulator
130396	ARE3004	Regulator
130468	ARE3018	Regulator
130469	ARE3018	Regulator
130501	ARE0029	Regulator
130502	ARE0031	Regulator
130503	ARE0002	Regulator
130504	ARE0016	Regulator
130507	ARE0001	Regulator
130510	ARE9007	Regulator
130511	ARE9008	Regulator
130513	ARE0021	Regulator
130514	ARE0003	Regulator
130517	ARE0037	Regulator
130524	ARE0015	Regulator
130525	ARE0027	Regulator

HUCO	AS	PRODUCT
130526	ARE0032	Regulator
130528	ARE0005	Regulator
130530	ARE0028	Regulator
130531	ARE0004	Regulator
130532	ARE0022	Regulator
130533	ARE0024	Regulator
130534	ARE0023	Regulator
130536	ARE0025	Regulator
130545	ARE0035	Regulator
130551	ARE0007	Regulator
130552	ARE0006	Regulator
130555	ARE0017	Regulator
130557	ARE0011	Regulator
130577	ARE0073	Regulator
130593	ARE0060	Regulator
130608	ARE0058	Regulator
130614	ARE0059	Regulator
130670	ARE3017	Regulator
130681	ARE3001	Regulator
130693	ARE3001	Regulator
130694	ARE3021	Regulator
130695	ARE3009	Regulator
130696	ARE3002	Regulator
130697	ARE3005	Regulator
130698	ARE3053	Regulator
130699	ARE3006	Regulator
130782	ARE4009	Regulator
130790	ARE4003	Regulator
130791	ARE4007	Regulator
130795	ARE4006	Regulator
130796	ARE4008	Regulator
130797	ARE4004	Regulator
130799	ARE4005	Regulator
130820	ARE4001	Regulator
130954	ARE9018	Regulator
131003	ARE9001	Regulator
132801	ARE6007	Regulator
132852	ARE2013	Regulator
132853	ARE2014	Regulator
132855	ARE2015	Regulator
132857	ARE2004	Regulator
132861	ARE2027	Regulator
132863	ARE2021	Regulator
132866	ARE2009	Regulator
132874	ARE5003	Regulator
132890	ARE6002	Regulator
132891	ARE6013	Regulator
132906	ARE5018	Regulator
132910	ARE5005	Regulator
132912	ARE5026	Regulator
132914	ARE5011	Regulator
132918	ARE5028	Regulator
132919	ARE5029	Regulator
132920	ARE5015	Regulator
132921	ARE5016	Regulator
132922	ARE5033	Regulator
132938	ARE6018	Regulator
132939	ARE6022	Regulator
132940	ARE6005	Regulator
132941	ARE6006	Regulator
132942	ARE6008	Regulator
132943	ARE6009	Regulator

HUCO	AS	PRODUCT
132945	ARE6019	Regulator
132946	ARE6028	Regulator
132948	ARE2001	Regulator
132952	ARE2028	Regulator
132953	ARE2029	Regulator
132954	ARE2020	Regulator
132958	ARE2012	Regulator
132965	ARE5001	Regulator
132966	ARE5032	Regulator
132967	ARE5002	Regulator
132975	ARE6001	Regulator
132976	ARE6004	Regulator
132977	ARE5006	Regulator
132982	ARE5014	Regulator
132983	ARE5004	Regulator
132985	ARE6003	Regulator
132992	ARE2004	Regulator
132993	ARE2006	Regulator
132994	ARE2003	Regulator
132995	ARE2002	Regulator
132996	ARE2003	Regulator
132998	ARE2005	Regulator
133716	ARC0058	Rectifier
133717	ARC0060	Rectifier
133734	ARC0065	Rectifier
133762	ARC0048	Rectifier
133800	IC9001	Ignition Coil
133807	IC9002	Ignition Coil
138005	IM0001	Ignition Module
138007	IM0003	Ignition Module
138026	IM1001	Ignition Module
138072	IM5001	Ignition Module
138082	IM4001	Ignition Module
138151	IP0001	Ignition parts
138152	IP0002	Ignition parts
138156	IP0003	Ignition parts
138419	IC9004	Ignition Coil
138420	IM0002	Ignition Module
138803	IC9003	Ignition Coil
139071	ARC4007	Rectifier
139091	ARC4019	Rectifier
139092	ARC4020	Rectifier
139110	ARC0003	Rectifier
139111	ARC0004	Rectifier
139112	ARC0002	Rectifier
139113	ARC0007	Rectifier
139114	ARC0006	Rectifier
139115	ARC0005	Rectifier
139116	ARC0009	Rectifier
139117	ARC0037	Rectifier
139118	ARC0010	Rectifier
139119	ARC0008	Rectifier
139120	ARC0012	Rectifier
139121	ARC0011	Rectifier
139122	ARC0063	Rectifier
139125	ARC0001	Rectifier
139127	ARC0062	Rectifier
139131	ARC0045	Rectifier
139133	ARC0061	Rectifier
139161	ARC0019	Rectifier
139163	ARC0020	Rectifier
139164	ARC0021	Rectifier

HUCO	AS	PRODUCT
139165	ARC0022	Rectifier
139167	ARC0023	Rectifier
139169	ARC0026	Rectifier
139170	ARC0038	Rectifier
139171	ARC0016	Rectifier
139172	ARC0032	Rectifier
139173	ARC0024	Rectifier
139174	ARC0032	Rectifier
139176	ARC0035	Rectifier
139182	ARC0029	Rectifier
139184	ARC0030	Rectifier
139242	ARC2016	Rectifier
139245	ARC2025	Rectifier
139249	ARC2017	Rectifier
139250	ARC2024	Rectifier
139252	ARC2026	Rectifier
139260	ARC6005	Rectifier
139261	ARC6023	Rectifier
139262	ARC6008	Rectifier
139263	ARC6009	Rectifier
139266	ARC6008	Rectifier
139270	ARC5001	Rectifier
139271	ARC5002	Rectifier
139273	ARC6006	Rectifier
139274	ARC5003	Rectifier
139276	ARC6012	Rectifier
139280	ARC5007	Rectifier
139281	ARC5004	Rectifier
139283	ARC5006	Rectifier
139285	ARC5054	Rectifier
139287	ARC5008	Rectifier
139288	ARC5011	Rectifier
139289	ARC5055	Rectifier
139291	ARC5023	Rectifier
139293	ARC5029	Rectifier
139296	ARC5037	Rectifier
139297	ARC5038	Rectifier
139351	ARC0027	Rectifier
139406	ARD9014	Diode
139407	ARD9005	Diode
139450	ARC0029	Rectifier
139453	ARC0031	Rectifier
139454	ARC0030	Rectifier
139455	ARC0047	Rectifier
139461	ARC0040	Rectifier
139465	ARC0046	Rectifier
139471	ARC0051	Rectifier
139514	ARC9010	Rectifier
139519	ARC1022	Rectifier
139525	ARC4010	Rectifier
139531	ARC1001	Rectifier
139556	ARC3020	Rectifier
139557	ARC3036	Rectifier
139576	ARC1002	Rectifier
139579	ARC1003	Rectifier
139581	ARC4023	Rectifier
139586	ARC4008	Rectifier
139587	ARC4009	Rectifier
139588	ARC1025	Rectifier
139589	ARC1005	Rectifier
139591	ARC5020	Rectifier
139593	ARC5022	Rectifier

HUCO	AS	PRODUCT
139596	ARC5017	Rectifier
139600	ARC5018	Rectifier
139602	ARC5015	Rectifier
139604	ARC5025	Rectifier
139607	ARC5016	Rectifier
139610	ARC2002	Rectifier
139611	ARC2006	Rectifier
139612	ARC2005	Rectifier
139613	ARC2007	Rectifier
139614	ARC2011	Rectifier
139615	ARC2001	Rectifier
139616	ARC2012	Rectifier
139617	ARC2013	Rectifier
139618	ARC2004	Rectifier
139619	ARC2011	Rectifier
139620	ARC4002	Rectifier
139631	ARC4003	Rectifier
139632	ARC4004	Rectifier
139633	ARC4011	Rectifier
139635	ARC4005	Rectifier
139660	ARC3002	Rectifier
139661	ARC3004	Rectifier
139662	ARC3008	Rectifier
139663	ARC3005	Rectifier
139664	ARC3026	Rectifier
139666	ARC3019	Rectifier
139667	ARC3025	Rectifier
139668	ARC3027	Rectifier
139669	ARC3003	Rectifier
139670	ARC3006	Rectifier
139671	ARC3001	Rectifier
139672	ARC3007	Rectifier
139673	ARC3009	Rectifier
139674	ARC3017	Rectifier
139687	ARC3022	Rectifier
139692	ARC3011	Rectifier
139694	ARC3012	Rectifier
139695	ARC3021	Rectifier
139696	ARC3035	Rectifier
139721	ARC3016	Rectifier
139722	ARC3018	Rectifier
139725	ARC3015	Rectifier
139760	ASL9007	Slip ring
139777	ARC1006	Rectifier
139786	ASL9004	Slip ring
139794	ASL9001	Slip ring
139795	ASL9002	Slip ring
139807	ABH1001	A. Brush holder
139814	ABH4002	A. Brush holder
139846	ABH4001	A. Brush holder
139862	ABH1002	A. Brush holder

HYUNDAI / KIA	AS	PRODUCT
0K24118300	A5036	Alternator
0K2A218300	A5036	Alternator
36100-11110	S6017	Starter
36100-11120	S6017	Starter
36100-11130	S6017	Starter
36100-11140	S6017	Starter
36100-11150	S6017	Starter
36100-21740	S5002	Starter
36100-22000	S5002	Starter

HYUNDAI / KIA	AS	PRODUCT
36100-23100	S3053	Starter
36100-23150	S3053	Starter
36100-27000	S6024	Starter
36100-27010	S6024	Starter
36100-32510	S5020	Starter
36100-32630	S5020	Starter
36100-35020	S5019	Starter
36100-35030	S5019	Starter
36100-35040	S5019	Starter
36100-35050	S5019	Starter
36100-35510	S5019	Starter
36100-35900	S5019	Starter
36100-47600	S5046	Starter
36100-4A000	S3062	Starter
36100-4A010	S3062	Starter
36100-83010	S5047	Starter
37300-02503	A9006	Alternator
37300-02550	A9029	Alternator
37300-02551	A9029	Alternator
37300-12470	A9032	Alternator
37300-22200	A9005	Alternator
37300-22600	A9009	Alternator
37300-22650	A9008	Alternator
37300-23600	A9008	Alternator
37300-27010	A9035	Alternator
37300-27011	A9035	Alternator
37300-27012	A9035	Alternator
37300-27013	A9035	Alternator
37300-27030	A9035	Alternator
37300-27031	A9035	Alternator
37300-30013	A5011	Alternator
37300-32130	A9010	Alternator
37300-32131	A9010	Alternator
37300-32800	A5027	Alternator
37300-33010	A5011	Alternator
37300-33030	A5011	Alternator
37300-33100	A5027	Alternator
37300-33101	A5027	Alternator
37300-33103	A5027	Alternator
37300-33110	A5011	Alternator
37300-36030	A5011	Alternator
37300-38700	A9017	Alternator
37300-42017	A2002	Alternator
37300-42114	A2002	Alternator
37300-42203	A2002	Alternator
37300-42204	A2002	Alternator
37300-42206	A2002	Alternator
37300-42303	A2002	Alternator
37300-42355	A9001	Alternator
37300-42357	A9001	Alternator
37300-42358	A9001	Alternator
37300-42620	A9007	Alternator
37300-42804	A2002	Alternator
37300-42Q00	A2002	Alternator
37300-42Q10	A2002	Alternator
37300-43621	A9007	Alternator
37300-43850	A5011	Alternator
37300-47451	A9007	Alternator
37300-4A001	A9019	Alternator
37300-4A002	A9019	Alternator
37300-4A110	A9019	Alternator
37300-4A111	A9019	Alternator
37300-4A112	A9019	Alternator
37300-4A113	A9019	Alternator
37300-4X000	A9018	Alternator
37300-4X001	A9018	Alternator
37300-4X002	A9018	Alternator
37300-4X500	A9018	Alternator
37300-4X501	A9018	Alternator
37300-4X502	A9018	Alternator
37300-4X503	A9018	Alternator
37322-27010	AFP6007	FW pulley
37322-27012	AFP6007	FW pulley
37322-2A000	AFP9011	FW pulley
37322-2A110	AFP9011	FW pulley
37350-24010	AS5001	Stator
37350-32120	AS5004	Stator
37370-21200	ARE5004	Regulator
37370-22600	ARE5044	Regulator
50210-40108	AFP6001	FW pulley
OK20118300A	A5036	Alternator
OK20118300B	A5036	Alternator
OK24018300	A5036	Alternator
OK24118300	A5036	Alternator
OK2A218300	A5036	Alternator
OK72A-18-300	A9032	Alternator
OK72B-18-300	A9032	Alternator

IHC	AS	PRODUCT
3078957R91	ARC0061	Rectifier
3078957R92	ARC0061	Rectifier

IKA	AS	PRODUCT
017541	PSX142-145	Sta. Brush set
120010	ASL9005	Slip ring
120020	ASL9006	Slip ring
120100	ASL9011	Slip ring
120200	ASL9015	Slip ring
120250	ASL9001	Slip ring
120260	ASL9002	Slip ring
120390	ASL9008	Slip ring
120410	ASL9003	Slip ring
120420	ASL9007	Slip ring
120430	ASL9010	Slip ring
120440	ASL9004	Slip ring
120470	ASL9009	Slip ring
120890	ASL9014	Slip ring
120940	ASL9012	Slip ring
136190	ABEC3001	Bearing cover
136620	APC0003	Plastic cover
136790	ABEC0002	Bearing cover
136800	ABEC0005	Bearing cover
136810	ABEC0006	Bearing cover
136840	ABEC0003	Bearing cover
136850	ABEC0004	Bearing cover
136860	ABEC0001	Bearing cover
335151	AFP0001	FW pulley
335161	AFP0004	FW pulley
335171	AFP0005	FW pulley
335181	AFP0003	FW pulley
335191	AFP0002	FW pulley
335201	AFP0010	FW pulley
335221	AFP0006	FW pulley
335231	AFP0040	FW pulley
335261	AFP0032	FW pulley
335281	AFP2003	FW pulley
335291	AFP0008	FW pulley
335300	AT0003	Combi tools
335311	AFP0015	FW pulley
335351	AFP6006	FW pulley
335371	AFP1002	FW pulley
335391	AFP6004	FW pulley
335401	AFP4001	FW Pulley
335411	AFP0009	FW pulley
335471	AFP0042	FW pulley
335481	AFP0014	FW pulley
335571	AFP0015	FW pulley
335591	AFP3014	FW pulley
335601	AFP0030	FW pulley
335611	AFP0043	FW pulley
335621	AFP0013	FW pulley
335631	AFP4005	FW pulley
335651	AFP0038	FW pulley
335681	AFP0031	FW pulley
335691	AFP0046	FW pulley
335700	AT0002	Combi tools
335711	AFP0026	FW pulley
335721	AFP0054	FW pulley
335731	AFP0029	FW pulley
335741	AFP0039	FW pulley
335750	AT0004	Combi tools
335811	AFP3011	FW pulley
335821	AFP3012	FW pulley
335841	AFP0044	FW pulley
335861	AFP3013	FW pulley
335871	AFP0002	FW pulley
335881	AFP9004	FW pulley
335901	AFP9007	FW pulley
335911	AFP0028	FW pulley
335921	AFP0061	FW pulley
335941	AFP6008	FW pulley
335961	AFP6002	FW pulley
342000	AT0001	Combi tools
353011	AFP3008	FW pulley
353060	AT0005	Combi tools
353081	AFP6010	FW pulley
353091	AFP0055	FW pulley
353101	AFP0056	FW pulley
353111	AFP0035	FW pulley
353121	AFP0050	FW pulley
353141	AFP0045	FW pulley
353151	AFP4004	FW pulley
353161	AFP0014	FW pulley
353171	AFP9006	FW pulley
353191	AFP4003	FW pulley
353201	AFP3017	FW pulley
353231	AFP0047	FW pulley
353251	AFP0062	FW pulley
353261	AFP0058	FW pulley
353271	AFP0034	FW pulley
353311	AFP9010	FW pulley
353321	AFP5002	FW pulley
353331	AFP3016	FW pulley
353351	AFP0049	FW pulley
353361	AFP0059	FW pulley
353371	AFP0052	FW pulley

IKA	AS	PRODUCT
353381	AFP0051	FW pulley
353391	AFP0037	FW pulley
353401	AFP0057	FW pulley
353421	AFP0053	FW pulley
353431	AFP0048	FW pulley
353441	AFP0033	FW pulley
353451	AFP3010	FW pulley
353471	AFP3018	FW pulley
353481	AFP3019	FW pulley
353541	AFP9009	FW pulley
353551	AFP6009	FW pulley
353561	AFP6001	FW pulley
353571	AFP6013	FW pulley
353581	AFP5005	FW pulley
353591	AFP9005	FW pulley
353611	AFP0063	FW pulley
353621	AFP4002	FW pulley
353641	AFP6003	FW Pulley
353651	AFP0060	FW pulley
353661	AFP3015	FW pulley
353671	AFP0064	FW pulley
353691	AFP0065	FW pulley
353741	AFP3020	FW pulley
353761	AFP5006	FW pulley
353781	AFP6014	FW pulley
353791	AFP6005	FW pulley
353811	AFP0066	FW pulley
353831	AFP5003	FW pulley
353841	AFP0027	FW pulley
353851	AFP0067	FW pulley
353861	AFP0068	FW pulley
353871	AFP0069	FW pulley
353881	AFP0070	FW pulley
353901	AFP6002	FW pulley
353911	AFP3021	FW pulley
353921	AFP3022	FW pulley
353951	AFP6011	FW pulley
353961	AFP6012	FW pulley
354041	AFP0041	FW pulley
354111	AFP5008	FW pulley
354151	AFP6017	FW pulley
354171	AFP5007	FW pulley
354181	AFP5009	FW pulley
354211	AFP6010	FW pulley
354391	AFP3025	FW pulley
423630	SG0023	Starter gear
433940	SRS0015	Repair set
433970	SRS0014	Repair set
440620	SBU9046	Bushing
440770	SBU9040	Bushing
440820	SBU9051	Bushing
440930	SBU9048	Bushing
441130	SBU9035	Bushing
442720	SBU9047	Bushing
443010	SBU9036	Bushing
443020	SBU9037	Bushing
443070	SBU9039	Bushing
443080	SBU9038	Bushing
444090	SBU9043	Bushing
444100	SBU9044	Bushing
444110	SBU9042	Bushing
444640	SBU9041	Bushing

IKA	AS	PRODUCT
444840	SBU9050	Bushing
445060	SBU9045	Bushing
771241	SBH0031	S. Brush holder
771251	SBH0034	S. Brush holder
771341	SBH0029	S. Brush holder
771601	ABH1001	A. Brush holder
771621	ABH1003	A. Brush holder
771631	ABH1004	A. Brush holder
771641	ABH1005	A. Brush holder
771661	ABH9001	A. Brush holder
772021	SBH0033	S. Brush holder
772031	SBH0032	S. Brush holder
772291	SBH0035	S. Brush holder
772821	SBH0030	S. Brush holder
772831	SBH0028	S. Brush holder
772931	SBH0036	S. Brush holder
840790	ABE9045	Bearing
840970	ABE9046	Bearing
881200	ABE9002	Bearing
881210	ABE9018	Bearing
881300	ABE9025	Bearing
881350	ABE9030	Bearing
881370	ABE9022	Bearing
881410	ABE9026	Bearing
881440	ABE9020	Bearing
881560	ABE9001	Bearing
881570	ABE9003	Bearing
882100	ABE9019	Bearing
882130	ABE9021	Bearing
882360	ABE9005	Bearing
882540	ABE9027	Bearing
882780	ABE9029	Bearing
883890	ABE9044	Bearing
883950	ABE9006	Bearing
884270	ABE9007	Bearing
885350	ABE9004	Bearing
885360	ABE9028	Bearing
885380	ABE9023	Bearing
885390	ABE9024	Bearing
885400	ABE9017	Bearing
885450	ABE9016	Bearing
885510	ABE9008	Bearing
886230	ABE9010	Bearing
886850	ABE9013	Bearing
886870	ABE9015	Bearing
886890	ABE9014	Bearing
886900	ABE9012	Bearing
886910	ABE9011	Bearing
886930	ABE9009	Bearing
BSX98	BSX75	Sta. Brush set
FX70-71	SB9004	Sta. Brush set
FX75	SB9001	Sta. Brush set
IKSX10-11	SB9002	Sta. Brush set
IKSX2-3	SB9003	Sta. Brush set
JAAX12	AB2006	Alt. Brush set
JAAX16	AB5001	Alt. Brush set
JAAX19	AB2003	Alt. Brush set
JAAX20	AB2005	Alt. Brush set
JAAX24	AB5003	Alt. Brush set
JAAX25	AB5002	Alt. Brush set
JAAX28	AB6002	Alt. Brush set
JAAX31	AB5005	Alt. Brush set

IKA	AS	PRODUCT
JAAX32	AB2001	Alt. Brush set
JAAX33	AB6003	Alt. Brush set
JAAX34	AB5007	Alt. Brush set
JAAX35	AB6005	Alt. Brush set
JAAX36	AB5006	Alt. Brush set
JAAX36ST	AB5009	Alt. Brush set
JAAX37	AB2002	Alt. Brush set
JAAX38	AB6004	Alt. Brush set
JAAX39	AB2004	Alt. Brush set
JAAX9	AB6001	Alt. Brush set
JASX10-11	SB6008	Sta. Brush set
JASX15-6 (4)	SB2013	Sta. Brush set
JASX36-37	SB2004	Sta. Brush set
JASX38	SB5008	Sta. Brush set
JASX39	SB6005	Sta. Brush set
JASX40-41	SB5005	Sta. Brush set
JASX42-43	SB5004	Sta. Brush set
JASX44-28	SB5006	Sta. Brush set
JASX47-48	SB5011	Sta. Brush set
JASX49-61	SB2010	Sta. Brush set
JASX50-51	SB2007	Sta. Brush set
JASX52	SB6007	Sta. Brush set
JASX54-55	SB2009	Sta. Brush set
JASX57-58	SB2001	Sta. Brush set
JASX66-67	SB2002	Sta. Brush set
JASX69-70	SB5007	Sta. Brush set
JASX74	SB2006	Sta. Brush set
JASX74-75	SB2005	Sta. Brush set
JASX77-78	SB6003	Sta. Brush set
JASX80-81	SB2003	Sta. Brush set
JASX82-83	SB5001	Sta. Brush set
JASX84	SB6001	Sta. Brush set
JASX85	SB6002	Sta. Brush set
JASX88	SB6006	Sta. Brush set
JASX89	SB6004	Sta. Brush set
JASX92-93	SB2014	Sta. Brush set
JASX98-99	SB5002	Sta. Brush set
JMTX-42	AB5007	Alt. Brush set
JX43	AB4001	Alt. Brush set
LASX74-79-80	SB4001	Sta. Brush set
LASX77-78-74	SB4002	Sta. Brush set
LASX86-79-80	SB4003	Sta. Brush set
RX120 2	SB1002	Sta. Brush set
RX120/0 3	SB1003	Sta. Brush set
RX120/0 4	SB1004	Sta. Brush set
RX120/0 2	SB1002	Sta. Brush set
RX911	SB1001	Sta. Brush set

IKO	AS	PRODUCT
TLA1210Z	ABE9045	Bearing

IKRO	AS	PRODUCT
IK413HD	ARE0070	Regulator

INA	AS	PRODUCT
535003510	AFP5001	FW pulley
6ACC2	AFP6002	FW pulley
920789	AFP6002	FW pulley
F-123459.2	ABE9043	Bearing
F-203215	ABE9009	Bearing
F-213618.01	AFP1001	FW pulley
F-213618.1	AFP1001	FW pulley
F-219005	ABE9046	Bearing
F-225355.03	AFP0005	FW pulley
F-225355.04	AFP0005	FW pulley

INA	AS	PRODUCT
F-225355.05	AFP0005	FW pulley
F-225355.06	AFP0005	FW pulley
F-225355.07	AFP0005	FW pulley
F-225355.10	AFP0005	FW pulley
F-225355.3	AFP0005	FW pulley
F-225355.4	AFP0005	FW pulley
F-225355.5	AFP0005	FW pulley
F-225355.6	AFP0005	FW pulley
F-225355.7	AFP0005	FW pulley
F-225643.04	AFP0002	FW pulley
F-225643.05	AFP0002	FW pulley
F-225643.06	AFP0002	FW pulley
F-225643.07	AFP0002	FW pulley
F-225643.09	AFP0002	FW pulley
F-225643.10	AFP0002	FW pulley
F-225643.11	AFP0002	FW pulley
F-225643.12	AFP0002	FW pulley
F-225643.4	AFP0002	FW pulley
F-225643.5	AFP0002	FW pulley
F-225643.7	AFP0002	FW pulley
F-225644	AFP0003	FW pulley
F-225644.04	AFP0003	FW pulley
F-225644.05	AFP0003	FW pulley
F-225644.06	AFP0003	FW pulley
F-225644.07	AFP0003	FW pulley
F-225644.4	AFP0003	FW pulley
F-225644.5	AFP0003	FW pulley
F-225644.6	AFP0003	FW pulley
F-225644.7	AFP0003	FW pulley
F-225653.03	AFP0006	FW pulley
F-225653.04	AFP0006	FW pulley
F-225653.05	AFP0006	FW pulley
F-225653.06	AFP0009	FW pulley
F-225653.07	AFP0009	FW pulley
F-225653.08	AFP0006	FW pulley
F-225653.09	AFP0006	FW pulley
F-225653.10	AFP0009	FW pulley
F-225653.11	AFP0009	FW pulley
F-225653.12	AFP0006	FW pulley
F-225653.3	AFP0006	FW pulley
F-225653.4	AFP0006	FW pulley
F-225653.5	AFP0006	FW pulley
F-225653.6	AFP0009	FW pulley
F-225653.7	AFP0009	FW pulley
F-225653.8	AFP0006	FW pulley
F-225653.9	AFP0006	FW pulley
F-225653.91	AFP9002	Cover for pulley
F-226321.04	AFP0040	FW pulley
F-226321.05	AFP0040	FW pulley
F-226322.04	AFP0019	FW pulley
F-226322.05	AFP0019	FW pulley
F-226322.07	AFP0019	FW pulley
F-226322.09	AFP0011	FW pulley
F-226322.10	AFP0011	FW pulley
F-226322.11	AFP0011	FW pulley
F-226322.12	AFP0019	FW pulley
F-226322.4	AFP0019	FW pulley
F-226322.5	AFP0019	FW pulley
F-226322.6	AFP0011	FW pulley
F-226322.7	AFP0019	FW pulley
F-226322.9	AFP0011	FW pulley
F-226387.04	AFP0030	FW pulley
F-226387.05	AFP0030	FW pulley
F-226387.06	AFP0030	FW pulley
F-226387.07	AFP0030	FW pulley
F-226387.08	AFP0030	FW pulley
F-226387.09	AFP0030	FW pulley
F-226387.10	AFP0030	FW pulley
F-226387.7	AFP0030	FW pulley
F-226556.04	AFP0001	FW pulley
F-226556.05	AFP0001	FW pulley
F-226556.06	AFP0001	FW pulley
F-226556.07	AFP0001	FW pulley
F-226556.10	AFP0001	FW pulley
F-226556.4	AFP0001	FW pulley
F-226556.5	AFP0001	FW pulley
F-226556.7	AFP0001	FW pulley
F-226804.04	AFP0004	FW pulley
F-226804.05	AFP0004	FW pulley
F-226804.07	AFP0004	FW pulley
F-226804.09	AFP0004	FW pulley
F-226804.4	AFP0004	FW pulley
F-226804.5	AFP0004	FW pulley
F-226804.7	AFP0004	FW pulley
F-226954.03	AFP3001	FW pulley
F-226954.04	AFP3001	FW pulley
F-226954.05	AFP3001	FW pulley
F-226954.07	AFP3001	FW pulley
F-226954.3	AFP3001	FW pulley
F-226954.4	AFP3001	FW pulley
F-226954.5	AFP3001	FW pulley
F-2269625	AFP0071	FW pulley
F-2269628	AFP0071	FW pulley
F-227079.04	AFP0022	FW pulley
F-227079.05	AFP0022	FW pulley
F-227079.06	AFP0022	FW pulley
F-227079.4	AFP0022	FW pulley
F-227095.5	AFP0022	FW pulley
F-227628.04	AFP0010	FW pulley
F-227628.05	AFP0010	FW pulley
F-227628.06	AFP0010	FW pulley
F-227628.07	AFP0010	FW pulley
F-227628.10	AFP0010	FW pulley
F-227628.4	AFP0010	FW pulley
F-227628.5	AFP0010	FW pulley
F-227628.6	AFP0010	FW pulley
F-227628.7	AFP0010	FW pulley
F-227628.8	AFP0010	FW pulley
F-227820.08	AFP0032	FW pulley
F-227820.09	AFP0032	FW pulley
F-227820.10	AFP0032	FW pulley
F-227820.12	AFP0032	FW pulley
F-227820.13	AFP0032	FW pulley
F-227820.14	AFP0032	FW pulley
F-227820.4	AFP0032	FW pulley
F-227820.5	AFP0032	FW pulley
F-227820.6	AFP0032	FW pulley
F-227820.7	AFP0032	FW pulley
F-227820.8	AFP0032	FW pulley
F-227820.9	AFP0032	FW pulley
F-228215	AFP0003	FW pulley
F-228215.01	AFP0003	FW pulley
F-228215.02	AFP0003	FW pulley
F-228215.03	AFP0003	FW pulley
F-228215.04	AFP0003	FW pulley
F-228215.2	AFP0003	FW pulley
F-228618.04	AFP0017	FW pulley
F-228618.05	AFP0017	FW pulley
F-228618.07	AFP0017	FW pulley
F-228618.4	AFP0017	FW pulley
F-228618.5	AFP0017	FW pulley
F-228618.7	AFP0017	FW pulley
F-228751	AFP2003	FW pulley
F-228751.02	AFP2003	FW pulley
F-228751.03	AFP2003	FW pulley
F-228751.06	AFP2003	FW pulley
F-228751.07	AFP2003	FW pulley
F-228751.2	AFP2003	FW pulley
F-228751.3	AFP2003	FW pulley
F-228824.01	AFP0008	FW pulley
F-228824.04	AFP0008	FW pulley
F-228824.06	AFP0008	FW pulley
F-228824.07	AFP0008	FW pulley
F-228824.09	AFP0008	FW pulley
F-228824.1	AFP0008	FW pulley
F-228824.10	AFP0008	FW pulley
F-228824.11	AFP0008	FW pulley
F-228824.12	AFP0008	FW pulley
F-228824.4	AFP0008	FW pulley
F-228824.6	AFP0008	FW pulley
F-228824.7	AFP0008	FW pulley
F-228881.02	AFP3004	FW pulley
F-228881.03	AFP3004	FW pulley
F-228881.2	AFP3004	FW pulley
F-228881.3	AFP3004	FW pulley
F-229363.05	AFP0015	FW pulley
F-229363.06	AFP0015	FW pulley
F-229363.07	AFP0015	FW pulley
F-229363.09	AFP0015	FW pulley
F-229363.5	AFP0015	FW pulley
F-229363.6	AFP0015	FW pulley
F-229363.9	AFP0015	FW pulley
F-229603	AFP3005	FW pulley
F-229603.01	AFP3005	FW pulley
F-229603.04	AFP3005	FW pulley
F-229603.07	AFP3013	FW pulley
F-229603.1	AFP3005	FW pulley
F-229603.10	AFP3005	FW pulley
F-229603.11	AFP3005	FW pulley
F-229603.12	AFP3013	FW pulley
F-229603.13	AFP3013	FW pulley
F-229603.14	AFP3005	FW pulley
F-229603.15	AFP3013	FW pulley
F-229603.16	AFP3013	FW pulley
F-229603.2	AFP3013	FW pulley
F-229603.3	AFP3013	FW pulley
F-229603.4	AFP3005	FW pulley
F-229603.5	AFP3005	FW pulley
F-229603.6	AFP3013	FW pulley
F-229603.7	AFP3013	FW pulley
F-229603.8	AFP3013	FW pulley
F-229603.9	AFP3013	FW pulley
F-229643.03	AFP3002	FW pulley
F-229643.04	AFP3002	FW pulley
F-229643.07	AFP3002	FW pulley
F-229643.10	AFP3002	FW pulley

INA	AS	PRODUCT
F-229643.11	AFP3002	FW pulley
F-229643.4	AFP3002	FW pulley
F-229974	AFP9003	FW pulley
F-229974.03	AFP5001	FW pulley
F-229974.04	AFP9003	FW pulley
F-229974.05	AFP9003	FW pulley
F-229974.1	AFP5001	FW pulley
F-229974.3	AFP5001	FW pulley
F-229974.4	AFP9003	FW pulley
F-229974.5	AFP9003	FW pulley
F-230051	AFP6006	FW pulley
F-230051.02	AFP6006	FW pulley
F-230051.03	AFP6006	FW pulley
F-230051.2	AFP6006	FW pulley
F-230147	AFP0014	FW pulley
F-230147.01	AFP0014	FW pulley
F-230147.02	AFP0014	FW pulley
F-230147.03	AFP0014	FW pulley
F-230147.04	AFP0014	FW pulley
F-230147.05	AFP0014	FW pulley
F-230147.1	AFP0014	FW pulley
F-230147.2	AFP0014	FW pulley
F-230147.3	AFP0014	FW pulley
F-230209	AFP0024	FW pulley
F-230209.02	AFP0024	FW pulley
F-230209.03	AFP0024	FW pulley
F-230209.04	AFP0024	FW pulley
F-230209.2	AFP0024	FW pulley
F-230209.3	AFP0024	FW pulley
F-230283	AFP0043	FW pulley
F-230283.01	AFP0039	FW pulley
F-230283.02	AFP0039	FW pulley
F-230283.03	AFP0039	FW pulley
F-230283.1	AFP0039	FW pulley
F-230401	AFP0007	FW pulley
F-230401.06	AFP0007	FW pulley
F-230401.07	AFP0007	FW pulley
F-230401.08	AFP0007	FW pulley
F-230401.09	AFP0007	FW pulley
F-230401.6	AFP0007	FW pulley
F-230401.7	AFP0007	FW pulley
F-230401.8	AFP0007	FW pulley
F-230566.01	AFP0044	FW pulley
F-230753	AFP1002	FW pulley
F-230753.03	AFP1002	FW pulley
F-230753.06	AFP1002	FW pulley
F-230753.1	AFP1002	FW pulley
F-230753.6	AFP1002	FW pulley
F-230759.01	AFP3003	FW pulley
F-230759.02	AFP3003	FW pulley
F-230759.05	AFP3003	FW pulley
F-230759.1	AFP3003	FW pulley
F-230759.2	AFP3003	FW pulley
F-230825.02	AFP0042	FW pulley
F-230825.03	AFP0042	FW pulley
F-230825.04	AFP0042	FW pulley
F-230825.05	AFP0042	FW pulley
F-230825.2	AFP0042	FW pulley
F-230825.3	AFP0042	FW pulley
F-230846	AFP0017	FW pulley
F-230846.01	AFP0017	FW pulley
F-230846.02	AFP0017	FW pulley
F-230846.03	AFP0017	FW pulley
F-230846.1	AFP0018	FW pulley
F-230846.3	AFP0017	FW pulley
F-230866.04	AFP4001	FW pulley
F-230866.05	AFP4001	FW pulley
F-230866.07	AFP4001	FW pulley
F-230866.10	AFP4001	FW pulley
F-230866.11	AFP4001	FW pulley
F-231108	AFP6004	FW pulley
F-231108.02	AFP6004	FW pulley
F-231142	AFP0023	FW pulley
F-231142.01	AFP0023	FW pulley
F-231142.05	AFP0023	FW pulley
F-231142.08	AFP0023	FW pulley
F-231142.1	AFP0023	FW pulley
F-231618.01	AFP1001	FW pulley
F-231618.02	AFP1001	FW pulley
F-231618.04	AFP1001	FW pulley
F-231618.05	AFP1001	FW pulley
F-231618.1	AFP1001	FW pulley
F-231618.5	AFP1001	FW pulley
F-232001.02	AFP0031	FW pulley
F-232001.04	AFP0031	FW pulley
F-232001.06	AFP0031	FW pulley
F-232001.07	AFP0031	FW pulley
F-232001.08	AFP0031	FW pulley
F-232001.09	AFP0031	FW pulley
F-232001.4	AFP0031	FW pulley
F-232030.02	AFP3010	FW pulley
F-232030.03	AFP3010	FW pulley
F-232030.04	AFP3010	FW pulley
F-232030.05	AFP3010	FW pulley
F-232030.06	AFP3010	FW pulley
F-232030.07	AFP3010	FW pulley
F-232030.09	AFP3010	FW pulley
F-232030.10	AFP3010	FW pulley
F-232030.11	AFP3010	FW pulley
F-232030.12	AFP3010	FW pulley
F-232030.5	AFP3010	FW pulley
F-232288.01	AFP2001	FW pulley
F-232288.02	AFP2001	FW pulley
F-232288.03	AFP2001	FW pulley
F-232288.1	AFP2001	FW pulley
F-232288.2	AFP2001	FW pulley
F-232353.03	AFP2002	FW pulley
F-232369.02	AFP0029	FW pulley
F-232369.04	AFP0029	FW pulley
F-232369.05	AFP0029	FW pulley
F-232369.07	AFP0020	FW pulley
F-232369.08	AFP0029	FW pulley
F-232369.2	AFP0020	FW pulley
F-232369.5	AFP0029	FW pulley
F-232542	ABE9045	Bearing
F-232600	AFP5001	FW pulley
F-232600.01	AFP5001	FW pulley
F-232774.01	AFP3007	FW pulley
F-232774.03	AFP3007	FW pulley
F-232774.04	AFP3007	FW pulley
F-232774.05	AFP3007	FW pulley
F-232774.4	AFP3007	FW pulley
F-232854.03	AFP9007	FW pulley
F-232854.06	AFP9007	FW pulley
F-232854.3	AFP9007	FW pulley
F-232854.6	AFP9007	FW pulley
F-233106.01	AFP6001	FW pulley
F-233106.03	AFP6001	FW pulley
F-233106.04	AFP6001	FW pulley
F-233106.05	AFP6001	FW pulley
F-233106.1	AFP6001	FW pulley
F-233106.2	AFP6001	FW pulley
F-233197.02	AFP0021	FW pulley
F-233197.03	AFP0021	FW pulley
F-233197.04	AFP0021	FW pulley
F-233197.05	AFP0021	FW pulley
F-233197.5	AFP0021	FW pulley
F-233525	AFP0016	FW pulley
F-233525.01	AFP0016	FW pulley
F-233525.04	AFP0016	FW pulley
F-233525.05	AFP0016	FW pulley
F-233525.1	AFP0016	FW pulley
F-233593	AFP3006	FW pulley
F-233593.01	AFP3006	FW pulley
F-233593.04	AFP3006	FW pulley
F-233593.05	AFP3006	FW pulley
F-233593.1	AFP3006	FW pulley
F-233608.01	AFP9006	FW pulley
F-233608.02	AFP9006	FW pulley
F-233608.03	AFP9006	FW pulley
F-233608.1	AFP9006	FW pulley
F-233608.2	AFP9006	FW pulley
F-233834	AFP0046	FW pulley
F-233834.01	AFP0038	FW pulley
F-233834.02	AFP0038	FW pulley
F-233834.03	AFP0038	FW pulley
F-233970	AFP6007	FW pulley
F-233970.02	AFP6007	FW pulley
F-233970.03	AFP6007	FW pulley
F-233970.04	AFP6007	FW pulley
F-233970.3	AFP6007	FW pulley
F-234045	AFP0013	FW pulley
F-234359	AFP4005	FW pulley
F-234359.03	AFP4005	FW pulley
F-234359.2	AFP4005	FW pulley
F-234359.3	AFP4005	FW pulley
F-234637	AFP3011	FW pulley
F-234637.01	AFP3011	FW pulley
F-234637.03	AFP3011	FW pulley
F-234637.04	AFP3011	FW pulley
F-234637.1	AFP3011	FW pulley
F-234739	AFP3014	FW pulley
F-234739.04	AFP3014	FW pulley
F-234739.05	AFP3014	FW pulley
F-234739.3	AFP3014	FW pulley
F-235152.01	AFP3004	FW pulley
F-235152.02	AFP3004	FW pulley
F-235152.03	AFP3004	FW pulley
F-235152.04	AFP3004	FW pulley
F-235152.1	AFP3004	FW pulley
F-235152.2	AFP3004	FW pulley
F-235152.3	AFP3004	FW pulley
F-235152.4	AFP3004	FW pulley
F-235492	AFP9010	FW pulley
F-235492.02	AFP9010	FW pulley
F-235492.2	AFP9010	FW pulley

INA	AS	PRODUCT
F-235931	AFP9009	FW pulley
F-235931.02	AFP9009	FW pulley
F-235967.1	AFP0045	FW pulley
F-235968	AFP0045	FW pulley
F-235968.01	AFP0045	FW pulley
F-235968.08	AFP0045	FW pulley
F-235968.09	AFP0045	FW pulley
F-236001	AFP5004	FW pulley
F-236001.01	AFP5004	FW pulley
F-236071.02	AFP9011	FW pulley
F-236071.05	AFP9011	FW pulley
F-236127	AFP0050	FW pulley
F-236127.01	AFP0050	FW pulley
F-236127.02	AFP0050	FW pulley
F-236127.03	AFP0050	FW pulley
F-236127.04	AFP0050	FW pulley
F-236127.05	AFP0050	FW pulley
F-236127.06	AFP0050	FW pulley
F-236528	AFP0028	FW pulley
F-236528.01	AFP0028	FW pulley
F-236528.02	AFP0028	FW pulley
F-236528.03	AFP0028	FW pulley
F-236528.04	AFP0028	FW pulley
F-236528.06	AFP0028	FW pulley
F-236528.07	AFP0028	FW pulley
F-236528.1	AFP0028	FW pulley
F-236566	AFP0044	FW pulley
F-236566.01	AFP0044	FW pulley
F-236566.02	AFP0044	FW pulley
F-236566.1	AFP0044	FW pulley
F-236591.01	AFP3009	FW pulley
F-236591.04	AFP3009	FW pulley
F-236591.05	AFP3009	FW pulley
F-236591.06	AFP3009	FW pulley
F-236591.1	AFP3009	FW pulley
F-236591.4	AFP3009	FW pulley
F-236675.02	AFP3016	FW pulley
F-236675.03	AFP3016	FW pulley
F-236675.04	AFP3016	FW pulley
F-237045	AFP4003	FW pulley
F-237045.02	AFP4003	FW pulley
F-237101.01	AFP3008	FW pulley
F-237101.02	AFP3008	FW pulley
F-237101.03	AFP3008	FW pulley
F-237101.04	AFP3008	FW pulley
F-237101.1	AFP3008	FW pulley
F-237101.2	AFP3008	FW pulley
F-237481	AFP3012	FW pulley
F-237481.01	AFP3012	FW pulley
F-237481.02	AFP3012	FW pulley
F-237481.1	AFP3012	FW pulley
F-237653	AFP0025	FW pulley
F-238120	AFP0055	FW pulley
F-238120.01	AFP0055	FW pulley
F-238120.02	AFP0055	FW pulley
F-238120.1	AFP0055	FW pulley
F-238163	AFP5002	FW pulley
F-238163.01	AFP5002	FW pulley
F-238163.02	AFP5002	FW pulley
F-238163.03	AFP5002	FW pulley
F-238163.04	AFP5002	FW pulley
F-238163.2	AFP5002	FW pulley
F-238215.01	AFP0043	FW pulley
F-238215.02	AFP0043	FW pulley
F-238215.03	AFP0043	FW pulley
F-238216	AFP0046	FW pulley
F-238216.01	AFP0046	FW pulley
F-238419.02	AFP3015	FW pulley
F-238512.02	AFP0058	FW pulley
F-238512.03	AFP0058	FW pulley
F-238512.05	AFP0058	FW pulley
F-238512.06	AFP0058	FW pulley
F-238512.5	AFP0058	FW pulley
F-238822	AFP6013	FW pulley
F-238822.01	AFP6013	FW pulley
F-238822.02	AFP6013	FW pulley
F-238918.01	AFP0037	FW pulley
F-238918.02	AFP0037	FW pulley
F-239356	AFP0049	FW pulley
F-239356.01	AFP0049	FW pulley
F-239356.02	AFP0049	FW pulley
F-239356.03	AFP0049	FW pulley
F-239662.01	AFP0030	FW pulley
F-239779	AFP3023	FW pulley
F-239779.01	AFP3023	FW pulley
F-239779.03	AFP3023	FW pulley
F-239808.01	AFP3020	FW pulley
F-239808.02	AFP3020	FW pulley
F-239808.03	AFP3020	FW pulley
F-239808.04	AFP3020	FW pulley
F-239808.05	AFP3020	FW pulley
F-239808.06	AFP3020	FW pulley
F-239809.01	AFP3010	FW pulley
F-239809.02	AFP3010	FW pulley
F-239809.03	AFP3010	FW pulley
F-239912.01	AFP6009	FW pulley
F-239912.02	AFP6009	FW pulley
F-239912.03	AFP6009	FW pulley
F-239973.01	AFP3015	FW pulley
F-239973.02	AFP3015	FW pulley
F-239973.03	AFP3015	FW pulley
F-239973.04	AFP3015	FW pulley
F-239973.05	AFP3015	FW pulley
F-239992	AFP0036	FW pulley
F-239992.01	AFP0036	FW pulley
F-239992.02	AFP0036	FW pulley
F-239992.03	AFP0036	FW pulley
F-240113	AFP2002	FW pulley
F-240113.01	AFP2002	FW pulley
F-240113.03	AFP2002	FW pulley
F-240138	AFP0048	FW pulley
F-240138.01	AFP0048	FW pulley
F-240138.1	AFP0048	FW pulley
F-240139	AFP0047	FW pulley
F-240139.02	AFP0047	FW pulley
F-240139.03	AFP0047	FW pulley
F-240139.04	AFP0047	FW pulley
F-240139.05	AFP0047	FW pulley
F-240139.2	AFP0047	FW pulley
F-240423	AFP0039	FW pulley
F-532699	AFP0009	FW pulley
F-533709	AFP0007	FW pulley
F-550181	AFP3018	FW pulley
F-550181.03	AFP3018	FW pulley
F-550181.04	AFP3018	FW pulley
F-550181.05	AFP3018	FW pulley
F-550213.01	AFP0056	FW pulley
F-550213.02	AFP0057	FW pulley
F-550213.03	AFP0056	FW pulley
F-550213.04	AFP0056	FW pulley
F-550213.06	AFP0053	FW pulley
F-550213.07	AFP0056	FW pulley
F-550213.08	AFP0057	FW pulley
F-550213.09	AFP0057	FW pulley
F-550213.10	AFP0056	FW pulley
F-550213.11	AFP0057	FW pulley
F-550379	AFP3017	FW pulley
F-550379.01	AFP3017	FW pulley
F-550379.02	AFP5005	FW pulley
F-550379.03	AFP3017	FW pulley
F-550379.1	AFP3017	FW pulley
F-550426	AFP5006	FW pulley
F-550532	AFP0070	FW pulley
F-550532.01	AFP0070	FW pulley
F-551357	AFP0048	FW pulley
F-551357.01	AFP0048	FW pulley
F-551359	AFP0038	FW pulley
F-551406.01	AFP0033	FW pulley
F-551657.01	AFP3019	FW pulley
F-551657.02	AFP3019	FW pulley
F-551657.03	AFP3019	FW pulley
F-551657.04	AFP3019	FW pulley
F-551657.05	AFP3019	FW pulley
F-552016.01	AFP4005	FW pulley
F-552305	AFP5007	FW pulley
F-552386.01	AFP5008	FW pulley
F-552396	AFP0046	FW pulley
F-552562	AFP5009	FW pulley
F-552699.02	AFP0009	FW pulley
F-552861	AFP0054	FW pulley
F-552901.02	AFP3021	FW pulley
F-552901.03	AFP3021	FW pulley
F-552923	AFP0007	FW pulley
F-552923.01	AFP0007	FW pulley
F-552923.1	AFP0007	FW pulley
F-552973	AFP3023	FW pulley
F-552973.01	AFP3023	FW pulley
F-553099	AFP0007	FW pulley
F-553322	AFP0066	FW pulley
F-553322.01	AFP0066	FW pulley
F-553392	AFP0052	FW pulley
F-553392.01	AFP0052	FW pulley
F-553393	AFP0059	FW pulley
F-553393.01	AFP0059	FW pulley
F-553448	AFP0065	FW pulley
F-553470	AFP0010	FW pulley
F-553470.01	AFP0010	FW pulley
F-553470.02	AFP0010	FW pulley
F-553857.01	AFP3010	FW pulley
F-553857.02	AFP3010	FW pulley
F-553857.03	AFP3010	FW pulley
F-553857.04	AFP3010	FW pulley
F-554007.02	AFP0068	FW pulley
F-554007.03	AFP0068	FW pulley
F-554053.01	AFP4002	FW pulley
F-554053.02	AFP4002	FW pulley

INA	AS	PRODUCT
F-554106.02	AFP0033	FW pulley
F-554106.03	AFP0033	FW pulley
F-554755.01	AFP3024	FW pulley
F-554765.03	AFP1002	FW pulley
F-554766.01	AFP0027	FW pulley
F-556174.01	AFP0051	FW pulley
F-556234.01	AFP0034	FW pulley
F-556234.02	AFP0034	FW pulley
F-556234.2	AFP0034	FW pulley
F-556311	AFP3025	FW pulley
F-556599.01	AFP3004	FW pulley
F-556602.01	AFP3002	FW pulley
F-556614	AFP9010	FW pulley
F-556615	AFP9007	FW pulley
F-557311	AFP3022	FW pulley
F-557311.01	AFP3022	FW pulley
F-557564	AFP0067	FW pulley
F-557565	AFP0067	FW pulley
F-557755	AFP3018	FW pulley
F-557928	AFP6002	FW pulley
F-557928.01	AFP6002	FW pulley
F-558404	AFP9004	FW pulley
F-559320	AFP0021	FW pulley
F-559320.01	AFP0021	FW pulley
F-559585	AFP0015	FW pulley
F-559585.01	AFP0015	FW pulley
F-560565	AFP0069	FW pulley
F-561338	AFP0003	FW pulley
F-563432	AFP0013	FW pulley
F-567525	AFP6005	FW pulley
F-568860	AFP6011	FW pulley
F-568861	AFP6012	FW pulley
F-570753	AFP6010	FW pulley
F-91916	ABE9009	Bearing
F-95066	ABE9033	Bearing
FC66624	ABE9045	Bearing
HK1014RS	ABE9046	Bearing

ISKRA	AS	PRODUCT
11 130 287	S0162	Starter
11.125.019	ARE9007	Regulator
11.125.049	ARE0001	Regulator
11.125.054	ARE9007	Regulator
11.125.055	ARE0015	Regulator
11.125.056	ARE9007	Regulator
11.125.065	ARE9007	Regulator
11.125.085	ARE9007	Regulator
11.125.094	ARE0047	Regulator
11.125.095	ARE0027	Regulator
11.125.097	ARE4003	Regulator
11.125.100.	ARE9008	Regulator
11.125.113	ARE3004	Regulator
11.125.117	ARE0001	Regulator
11.125.122	ARE9008	Regulator
11.125.129	ARE9008	Regulator
11.125.152	ARE0032	Regulator
11.125.198	ARE0001	Regulator
11.130.010	S0002	Starter
11.130.026	S0115	Starter
11.130.032	S0003	Starter
11.130.041	S0001	Starter
11.130.070	S0134	Starter
11.130.074	S0115	Starter
11.130.075	S0068	Starter
11.130.076	S9021	Starter
11.130.117	S0115	Starter
11.130.123	S4037(MM)R	Starter
11.130.124	S0092	Starter
11.130.127	S0116	Starter
11.130.140	S0116	Starter
11.130.141	S0068	Starter
11.130.146	S4021	Starter
11.130.151	S0068	Starter
11.130.179	S9024	Starter
11.130.193	S3014	Starter
11.130.194	S4018	Starter
11.130.199	S0116	Starter
11.130.200	S9021	Starter
11.130.201	S0114	Starter
11.130.203	S0152	Starter
11.130.208	S3015	Starter
11.130.216	S0118	Starter
11.130.219	S4033	Starter
11.130.225	S0118	Starter
11.130.229	S0067	Starter
11.130.230	S0002	Starter
11.130.233	S0004	Starter
11.130.253	S0114	Starter
11.130.254	S0113	Starter
11.130.266	S1013	Starter
11.130.322	S0116	Starter
11.130.328	S3005	Starter
11.130.338	S0004	Starter
11.130.339	S0002	Starter
11.130.346	S3015	Starter
11.130.366	S0110	Starter
11.130.373	S9021	Starter
11.130.378	S3014	Starter
11.130.398	S3005	Starter
11.130.403	S0116	Starter
11.130.407	S0002	Starter
11.130.408	S4018	Starter
11.130.410	S0116	Starter
11.130.411	S9021	Starter
11.130.412	S0067	Starter
11.130.414	S9024	Starter
11.130.417	S9009	Starter
11.130.421	S4022	Starter
11.130.436	S9018	Starter
11.130.484	S0115	Starter
11.130.490	S0092	Starter
11.130.491	S0068	Starter
11.130.492	S0118	Starter
11.130.500	S4037(MM)R	Starter
11.130.505	S9008	Starter
11.130.509	S9021	Starter
11.130.520	S4001	Starter
11.130.521	S9052	Starter
11.130.526	S4013	Starter
11.130.529	S3005	Starter
11.130.532	S0111	Starter
11.130.533	S0112	Starter
11.130.534	S0117	Starter
11.130.537	S0041	Starter
11.130.551	S0115	Starter

ISKRA	AS	PRODUCT
11.130.552	S9044	Starter
11.130.556	S3005	Starter
11.130.558	S0217	Starter
11.130.566	S0130	Starter
11.130.567	S0174	Starter
11.130.569	S0117	Starter
11.130.579	S4004	Starter
11.130.580	S1013	Starter
11.130.582	S3015	Starter
11.130.586	S4033	Starter
11.130.593	S9008	Starter
11.130.598	S0075	Starter
11.130.624	S4004	Starter
11.130.626	S0040	Starter
11.130.629	S9021	Starter
11.130.632	S9037	Starter
11.130.642	S0084	Starter
11.130.646	S3001	Starter
11.130.647	S0069	Starter
11.130.651	S0034	Starter
11.130.661	S4039	Starter
11.130.669	S9043	Starter
11.130.673	S0068	Starter
11.130.676	S9041	Starter
11.130.687	S0107	Starter
11.130.688	S9054	Starter
11.130.697	S0110	Starter
11.130.704	S9046	Starter
11.130.706	S9043	Starter
11.130.711	S4018	Starter
11.130.716	S3002	Starter
11.130.717	S9019	Starter
11.130.722	S0045	Starter
11.130.724	S0057	Starter
11.130.728	S0037	Starter
11.130.729	S0150	Starter
11.130.730	S0078	Starter
11.130.762	S0117	Starter
11.130.769	S4007	Starter
11.130.773	S3066	Starter
11.130.777	S0055	Starter
11.130.790	S3015	Starter
11.130.793	S0117	Starter
11.130.819	S0117	Starter
11.130.841	S0129	Starter
11.130.842	S0079	Starter
11.130.862	S9054	Starter
11.130.872	S9021	Starter
11.130.889	S9046	Starter
11.130.898	S0113	Starter
11.130.910	S0014	Starter
11.130.911	S0039	Starter
11.130.944	S0150	Starter
11.130.956	S3015	Starter
11.130.957	S3052	Starter
11.130.965	S3005	Starter
11.130.966	S1013	Starter
11.130.967	S4033	Starter
11.130.972	S4014	Starter
11.130.979	S0208	Starter
11.130.996	S0246	Starter
11.130.997	S0195	Starter

ISKRA	AS	PRODUCT
11.131.054	S0027	Starter
11.131.055	S0025	Starter
11.131.056	S3026	Starter
11.131.070	S4013	Starter
11.131.085	S0040	Starter
11.131.137	S0048	Starter
11.131.143	S0041	Starter
11.131.144	S0040	Starter
11.131.177	S0041	Starter
11.131.178	S0131	Starter
11.131.223	S0101	Starter
11.131.232	S3002	Starter
11.131.297	S0036	Starter
11.131.477	S0017	Starter
11.131.622	S3003	Starter
11.138.313	S1008	Starter
11.139.013	S0011	Starter
11.139.022	S0065	Starter
11.139.025	S0023	Starter
11.139.030	S0022	Starter
11.139.032	S0003	Starter
11.139.107	S0021	Starter
11.139.156	S9067	Starter
11.139.160	S1017	Starter
11.139.163	S0076	Starter
11.139.305	S0016	Starter
11.139.315	S1010	Starter
11.139.327	S0104	Starter
11.139.333	S0127	Starter
11.139.401	S2001	Starter
11.139.404	S3032	Starter
11.139.411	S9014	Starter
11.139.418	S0072	Starter
11.139.422	S3052	Starter
11.139.424	S9002	Starter
11.139.439	S0094	Starter
11.139.443	S0064	Starter
11.139.459	S9002	Starter
11.139.506	S0001	Starter
11.201.017	A0012	Alternator
11.201.027	A0004	Alternator
11.201.037	A0012	Alternator
11.201.055	A4029	Alternator
11.201.075	A4029	Alternator
11.201.087	A0017	Alternator
11.201.093	A4081	Alternator
11.201.096	A0004	Alternator
11.201.112	A4039	Alternator
11.201.151	A0017	Alternator
11.201.155	A0069	Alternator
11.201.167	A4059	Alternator
11.201.186	A0030	Alternator
11.201.201	A0017	Alternator
11.201.204	A4059	Alternator
11.201.211	A0141	Alternator
11.201.255	A3013	Alternator
11.201.256	A3013	Alternator
11.201.306	A4039	Alternator
11.201.332	A4065	Alternator
11.201.334	A4065	Alternator
11.201.336	A4039	Alternator
11.201.355	A4047	Alternator
11.201.358	A4063	Alternator
11.201.360	A0017	Alternator
11.201.400	A4011	Alternator
11.201.405	A4059	Alternator
11.201.415	A4011	Alternator
11.201.432	A4059	Alternator
11.201.457	A4039	Alternator
11.201.468	A4029	Alternator
11.201.476	A3007	Alternator
11.201.481	A4041	Alternator
11.201.500	A4009	Alternator
11.201.504	A4040	Alternator
11.201.507	A4009	Alternator
11.201.522	A0001	Alternator
11.201.523	A3004	Alternator
11.201.532	A3048	Alternator
11.201.536	A3003	Alternator
11.201.554	A3050	Alternator
11.201.557	A0030	Alternator
11.201.570	A0084	Alternator
11.201.571	A4039	Alternator
11.201.572	A4011	Alternator
11.201.574	A0030	Alternator
11.201.576	A4014	Alternator
11.201.579	A4011	Alternator
11.201.581	A4012	Alternator
11.201.583	A0134	Alternator
11.201.585	A4030	Alternator
11.201.586	A0088	Alternator
11.201.587	A4067	Alternator
11.201.595	A0018	Alternator
11.201.605	A0098	Alternator
11.201.611	A0141	Alternator
11.201.632	A0069	Alternator
11.201.633	A0069	Alternator
11.201.679	A3005	Alternator
11.201.695	A4018	Alternator
11.201.696	A4065	Alternator
11.201.697	A4044	Alternator
11.201.698	A4044	Alternator
11.201.705	A0001	Alternator
11.201.710	A0009	Alternator
11.201.711	A4018	Alternator
11.201.713	A0031	Alternator
11.201.729	A4014	Alternator
11.201.732	A0031	Alternator
11.201.746	A3060	Alternator
11.201.757	A0021	Alternator
11.201.768	A3010	Alternator
11.201.783	A0012	Alternator
11.201.811	A4014	Alternator
11.201.824	A4041	Alternator
11.201.875	A0082	Alternator
11.201.889	A0202	Alternator
11.201.890	A4041	Alternator
11.201.893	A4041	Alternator
11.201.895	A0021	Alternator
11.201.898	A0077	Alternator
11.201.903	A0203	Alternator
11.201.932	A0134	Alternator
11.201.933	A0115	Alternator
11.201.935	A0018	Alternator
11.201.937	A0009	Alternator
11.201.939	A3060	Alternator
11.201.990	A0006	Alternator
11.201.993	A0152	Alternator
11.203.004	A0005	Alternator
11.203.005	A0114	Alternator
11.203.006	A0172	Alternator
11.203.042	A4033	Alternator
11.203.054	A0163	Alternator
11.203.057	A0081	Alternator
11.203.085	A0022	Alternator
11.203.116	A0173	Alternator
11.203.155	A0203	Alternator
11.203.165	A0131	Alternator
11.203.167	A0114	Alternator
11.203.186	A0114	Alternator
11.203.215	A3059	Alternator
11.203.275	A0008	Alternator
11.203.312	A0127	Alternator
11.203.337	A3023	Alternator
11.203.470	A3027	Alternator
11.203.573	A3059	Alternator
11.203.631	A1016R	Alternator
11.203.871	A3027	Alternator
11.204.163	A3027	Alternator
11.209.002	A0077	Alternator
11.209.003	A2005	Alternator
11.209.004	A1014	Alternator
11.209.011	A1010	Alternator
11.209.012	A1001	Alternator
11.209.402	A2005	Alternator
11.209.416	A0010	Alternator
11.209.422	A0011	Alternator
11.209.424	A2003	Alternator
11.209.441	A1011	Alternator
11.209.448	A0024	Alternator
11.230.841	S0129	Starter
11.250.049	ARE0001	Regulator
11.250.121	SS9003	Starter solenoid
11.250.143	SS9003	Starter solenoid
11.251.120	ARE0047	Regulator
15.100.092	SD0006	Drive
15.100.152	SD0005	Drive
15.120.011	SBU9012	Bushing
15.120.094	SBU9004	Bushing
15.120.095	SBU9010	Bushing
16.150.010	SS0001	Starter solenoid
16.350.025	AS0002	Stator
16.350.042	AS0002	Stator
16.350.043	AS0006	Stator
16.350.083	AS0006	Stator
16.360.068	SA0010	Starter armature
16.360.322	SA0013	Starter armature
16.360.324	SA0016	Starter armature
16.360.325	SA0017	Starter armature
16.360.326	SA0012	Starter armature
16.360.333	SA0009	Starter armature
16.360.539	SA0001	Starter armature
16.670.012	SS0002	Starter solenoid
16.670.118	SS0003	Starter solenoid
16.670.119	SS0008	Starter solenoid
16.770.002	BX202	Alt. Brush set

ISKRA	AS	PRODUCT
16.770.114	BX202	Alt. Brush set
16.770.164	BX182	Alt. Brush set
16.770.188	JX42	Alt. Brush set
16.770.206	PX60	Alt. Brush set
16.900.035	SD9032	Drive
16.900.920	SD0004	Drive
16.900.935	SD0046	Drive
16.901.752	SD9006	Drive
16.903.130	SD0018	Drive
16.903.314	ARC9023	Rectifier
16.903.392	SD9008	Drive
16.903.507	ARC9024	Rectifier
16.905.163	ABE9002	Bearing
16.905.212	ARC0045	Rectifier
16.905.214	ABE9008	Bearing
16.905.226	BSX96	Sta. Brush set
16.905.235	BSX157-158	Sta. Brush set
16.905.247	BSX151	Sta. Brush set
16.905.253	ABE9004	Bearing
16.905.254	ARC0061	Rectifier
16.905.271	ABE9006	Bearing
16.905.276	ABE9002	Bearing
16.905.294	BSX102	Sta. Brush set
16.905.323	ARE9007	Regulator
16.905.375	BSX135-145	Sta. Brush set
16.905.376	BSX134-144	Sta. Brush set
16.905.380	BSX100	Sta. Brush set
16.905.382	SS0003	Starter solenoid
16.905.384	SF0001	Starter field coil
16.905.386	SF0015	Starter field coil
16.905.387	BSX34	Sta. Brush set
16.905.388	BSX34	Sta. Brush set
16.905.391	SF0002	Starter field coil
16.905.392	BSX96	Sta. Brush set
16.905.395	SS0004	Starter solenoid
16.905.439	SB9003	Sta. Brush set
16.905.463	ABE9006	Bearing
16.905.559	ABE9004	Bearing
16.905.616	ABE9006	Bearing
16.905.621	SF0004	Starter field coil
16.905.695	SB9002	Sta. Brush set
16.905.767	BSX102	Sta. Brush set
16.905.950	SB9003	Sta. Brush set
16.906.347	ABE9021	Bearing
16.970.206	PX60	Alt. Brush set
17.120.057	SBU9037	Bushing
AAG0402	A0012	Alternator
AAG0403	A0012	Alternator
AAG1104	A0012	Alternator
AAG1130	A0012	Alternator
AAG1301	A0004	Alternator
AAG1311	A0004	Alternator
AAG1315	A0004	Alternator
AAG1328	A0004	Alternator
AAG1338	A4009	Alternator
AAG1341	A4009	Alternator
AAK1107	A0097	Alternator
AAK1110	A4029	Alternator
AAK1125	A0017	Alternator
AAK1128	A4081	Alternator
AAK1130	A0020	Alternator
AAK1135	A4039	Alternator
AAK1152	A0069	Alternator
AAK1153	A0017	Alternator
AAK1157	A0069	Alternator
AAK1163	A4059	Alternator
AAK1167	A0030	Alternator
AAK1179	A0141	Alternator
AAK1209	A4029	Alternator
AAK1309	A0017	Alternator
AAK1326	A4011	Alternator
AAK1329	A4011	Alternator
AAK1339	A4041	Alternator
AAK1344	A4040	Alternator
AAK1347	A0001	Alternator
AAK1352	A0030	Alternator
AAK1363	A0018	Alternator
AAK1367	A0001	Alternator
AAK1369	A0009	Alternator
AAK1378	A0084	Alternator
AAK1383	A3060	Alternator
AAK3122	A4041	Alternator
AAK3124	A4041	Alternator
AAK3133	A0134	Alternator
AAK3134	A0115	Alternator
AAK3142	A2005	Alternator
AAK3161	A2005	Alternator
AAK3318	A0203	Alternator
AAK3330	A0018	Alternator
AAK3332	A0009	Alternator
AAK3334	A3060	Alternator
AAK3505	A0098	Alternator
AAK3510	A0141	Alternator
AAK3520	A0069	Alternator
AAK3525	A0069	Alternator
AAK3529	A4059	Alternator
AAK3538	A4059	Alternator
AAK3548	A0069	Alternator
AAK3560	A4039	Alternator
AAK3564	A4029	Alternator
AAK3568	A3007	Alternator
AAK3583	A3004	Alternator
AAK3591	A3048	Alternator
AAK3595	A3003	Alternator
AAK4104	A3013	Alternator
AAK4105	A3013	Alternator
AAK4140	A4039	Alternator
AAK4141	A0069	Alternator
AAK4147	A4047	Alternator
AAK4158	A4065	Alternator
AAK4160	A4065	Alternator
AAK4162	A4039	Alternator
AAK4174	A4047	Alternator
AAK4177	A4063	Alternator
AAK4179	A0017	Alternator
AAK4506	A3050	Alternator
AAK4509	A0030	Alternator
AAK4513	A0030	Alternator
AAK4515	A3004	Alternator
AAK4518	A4039	Alternator
AAK4519	A4011	Alternator
AAK4521	A4014	Alternator
AAK4524	A4011	Alternator
AAK4526	A4012	Alternator
AAK4528	A0134	Alternator
AAK4530	A4030	Alternator
AAK4531	A0088	Alternator
AAK4532	A4067	Alternator
AAK4542	A3005	Alternator
AAK4556	A4018	Alternator
AAK4557	A4065	Alternator
AAK4558	A4044	Alternator
AAK4559	A4044	Alternator
AAK4564	A4041	Alternator
AAK4569	A4018	Alternator
AAK4571	A0031	Alternator
AAK4575	A4014	Alternator
AAK4578	A0031	Alternator
AAK4588	A3010	Alternator
AAK4599	A4014	Alternator
AAK5131	A3057	Alternator
AAK5165	A0082	Alternator
AAK5169	A0202	Alternator
AAK5171	A0077	Alternator
AAK5198	A0006	Alternator
AAK5302	A0152	Alternator
AAK5305	A0005	Alternator
AAK5306	A0114	Alternator
AAK5307	A0172	Alternator
AAK5326	A4033	Alternator
AAK5329	A0163	Alternator
AAK5332	A0081	Alternator
AAK5376	A0203	Alternator
AAK5380	A0131	Alternator
AAK5382	A0114	Alternator
AAK5391	A0114	Alternator
AAK5502	A0077	Alternator
AAK5503	A1014	Alternator
AAK5510	A1010	Alternator
AAK5517	A3059	Alternator
AAK5543	A0127	Alternator
AAK5553	A3023	Alternator
AAK5574	A2003	Alternator
AAK5717	A3059	Alternator
AAK5723	A1011	Alternator
AAN3107	A0010	Alternator
AAN3112	A0011	Alternator
AAN5115	A1001	Alternator
AAN5133	A0173	Alternator
AAN5171	A0008	Alternator
AAN5322	A3027	Alternator
AAN5533	A3027	Alternator
AAN5772	A3027	Alternator
AAN7111	A1016R	Alternator
AAT1302	A0021	Alternator
AAT1306	A0021	Alternator
AAT1308	A0021	Alternator
AAT1318	A0022	Alternator
AAT1385	A0024	Alternator
AER1401	ARE9007	Regulator
AER1406	ARE9007	Regulator
AER1503	ARE0001	Regulator
AER1505	ARE9007	Regulator
AER1506	ARE9007	Regulator
AER1508	ARE9007	Regulator
AER1510	ARE9007	Regulator

ISKRA	AS	PRODUCT
AER1514	ARE9007	Regulator
AER1515	ARE9008	Regulator
AER1517	ARE9008	Regulator
AER1518	ARE9008	Regulator
AER1521	ARE3004	Regulator
AER1528	ARE9008	Regulator
AER1535	ARE9007	Regulator
AER1543	ARE9008	Regulator
ARD1133	SS9003	Starter solenoid
AZD2108	S3003	Starter
AZD3508	S1013	Starter
AZD3515	S3032	Starter
AZD3520	S0072	Starter
AZD3523	S3052	Starter
AZE1202	S4022	Starter
AZE1203	S3015	Starter
AZE1502	S3005	Starter
AZE1507	S3005	Starter
AZE1511	S4022	Starter
AZE1521	S3005	Starter
AZE1523	S3005	Starter
AZE1526	S1013	Starter
AZE1528	S4033	Starter
AZE2101	S3052	Starter
AZE2110	S0246	Starter
AZE2111	S0195	Starter
AZE2113	S0098	Starter
AZE2127	S1008	Starter
AZE2129	S1010	Starter
AZE2147	S0104	Starter
AZE2151	S3002	Starter
AZE2155	S0188	Starter
AZE2165	S0036	Starter
AZE2189	S9002	Starter
AZE2226	S9002	Starter
AZE2502	S9009	Starter
AZE2507	S0217	Starter
AZE2512	S9008	Starter
AZE2521	S0084	Starter
AZE2522	S3001	Starter
AZE2523	S0069	Starter
AZE2525	S0034	Starter
AZE2535	S9019	Starter
AZE2541	S3066	Starter
AZE2578	S0039	Starter
AZE2623	S0027	Starter
AZE2624	S0025	Starter
AZE2625	S3026	Starter
AZE2634	S0048	Starter
AZE2640	S0131	Starter
AZE2665	S0094	Starter
AZE3514	S4033	Starter
AZE4102	S9014	Starter
AZE4112	S0017	Starter
AZE4142	S0064	Starter
AZE4527	S0016	Starter
AZE4564	S0127	Starter
AZE4566	S0101	Starter
AZE6514	S0017	Starter
AZF3509	S3014	Starter
AZF3512	S3015	Starter
AZF3515	S0004	Starter
AZF3528	S0004	Starter
AZF3531	S3015	Starter
AZF3542	S0118	Starter
AZF3545	S3014	Starter
AZF3555	S9008	Starter
AZF3558	S3015	Starter
AZF4507	S0037	Starter
AZF4508	S0150	Starter
AZF4509	S0078	Starter
AZF4514	S0129	Starter
AZF4515	S0079	Starter
AZF4527	S0150	Starter
AZJ0402	S0115	Starter
AZJ0404	S0115	Starter
AZJ0405	S9021	Starter
AZJ3110	S0116	Starter
AZJ3116	S0116	Starter
AZJ3117	S9021	Starter
AZJ3118	S0067	Starter
AZJ3119	S9024	Starter
AZJ3124	S9018	Starter
AZJ3128	S0115	Starter
AZJ3131	S0092	Starter
AZJ3132	S0068	Starter
AZJ3133	S0118	Starter
AZJ3137	S4037(MM)R	Starter
AZJ3144	S9021	Starter
AZJ3148	S4001	Starter
AZJ3149	S9052	Starter
AZJ3151	S4013	Starter
AZJ3156	S0111	Starter
AZJ3157	S0112	Starter
AZJ3158	S0117	Starter
AZJ3160	S0041	Starter
AZJ3169	S0115	Starter
AZJ3170	S9044	Starter
AZJ3179	S0174	Starter
AZJ3181	S0117	Starter
AZJ3182	S4004	Starter
AZJ3188	S0150	Starter
AZJ3198	S4004	Starter
AZJ3199	S0040	Starter
AZJ3203	S9021	Starter
AZJ3206	S9037	Starter
AZJ3218	S9043	Starter
AZJ3222	S0068	Starter
AZJ3223	S9041	Starter
AZJ3231	S0107	Starter
AZJ3232	S9054	Starter
AZJ3234	S9024	Starter
AZJ3237	S0110	Starter
AZJ3242	S9046	Starter
AZJ3244	S9043	Starter
AZJ3248	S4018	Starter
AZJ3263	S0197	Starter
AZJ3279	S4007	Starter
AZJ3283	S0117	Starter
AZJ3299	S9054	Starter
AZJ3305	S9021	Starter
AZJ3314	S9046	Starter
AZJ3320	S0113	Starter
AZJ3347	S4014	Starter
AZJ3369	S4013	Starter
AZJ3374	S0040	Starter
AZJ3387	S0041	Starter
AZJ3388	S0040	Starter
AZJ3393	S0041	Starter
AZJ3440	S1017	Starter
AZJ3448	S0076	Starter
AZJ3508	S0115	Starter
AZJ3514	S4037(MM)R	Starter
AZJ3515	S0092	Starter
AZJ3516	S0116	Starter
AZJ3517	S0116	Starter
AZJ3518	S0068	Starter
AZJ3520	S4021	Starter
AZJ3522	S0068	Starter
AZJ3525	S9024	Starter
AZJ3531	S4018	Starter
AZJ3535	S0116	Starter
AZJ3536	S9021	Starter
AZJ3537	S0114	Starter
AZJ3538	S0152	Starter
AZJ3542	S4021	Starter
AZJ3544	S4018	Starter
AZJ3546	S0118	Starter
AZJ3548	S0067	Starter
AZJ3549	S0002	Starter
AZJ3556	S0114	Starter
AZJ3557	S0113	Starter
AZJ3582	S0116	Starter
AZJ3589	S0002	Starter
AZJ3590	S9021	Starter
AZJ3594	S0110	Starter
AZJ3598	S9021	Starter
AZJ4521	S0117	Starter
AZK5173	S0011	Starter
AZK5181	S0065	Starter
AZK5184	S0023	Starter
AZK5189	S0022	Starter
AZK5191	S0003	Starter
AZK5401	S0001	Starter
AZK5425	S0134	Starter
AZK5456	S0021	Starter
AZK5539	S9067	Starter
AZK5545	S0001	Starter
AZL3110	S4016	Starter
IA0037	A0012	Alternator
IA0055	A4029	Alternator
IA0075	A4029	Alternator
IA0096	A0004	Alternator
IA0097	A0020	Alternator
IA0116	A0004	Alternator
IA0201	A0017	Alternator
IA0211	A0141	Alternator
IA0258	A4063	Alternator
IA0294	A4039	Alternator
IA0331	A4065	Alternator
IA0332	A4065	Alternator
IA0336	A4039	Alternator
IA0445	A0069	Alternator
IA0529	A0086	Alternator
IA0536	A3003	Alternator
IA0585	A4030	Alternator

ISKRA	AS	PRODUCT
IA0595	A0018	Alternator
IA0632	A0069	Alternator
IA0705	A0001	Alternator
IA0709	A0016	Alternator
IA0732	A0031	Alternator
IA0811	A4014	Alternator
IA0824	A4041	Alternator
IA0873	A4010	Alternator
IA0875	A0082	Alternator
IA0889	A0202	Alternator
IA0890	A4041	Alternator
IA0895	A0021	Alternator
IA0990	A0006	Alternator
IA0993	A0152	Alternator
IA1005	A0114	Alternator
IA1006	A0172	Alternator
IA1018	A4033	Alternator
IA1019	A0017	Alternator
IA1040	A0163	Alternator
IA1041	A0081	Alternator
IA1043	A0173	Alternator
IA1045	A0131	Alternator
IA1106	A0022	Alternator
IA1127	A3059	Alternator
IA1146	A0127	Alternator
IA1147	A0027	Alternator
IA1148	A0042	Alternator
IA1150	A0008	Alternator
IA1158	A3023	Alternator
IA1164	A0190	Alternator
IA1228	A1016R	Alternator
IA1244	A3027	Alternator
IA1252	A0041	Alternator
IA1253	A0078	Alternator
IA1254	A0128	Alternator
IA1255	A0041	Alternator
IA1269	A0186	Alternator
IA1304	A0188	Alternator
IA1305	A0056	Alternator
IA1306	A0039	Alternator
IA1307	A3108	Alternator
IA1330	A0164	Alternator
IA1339	A0046	Alternator
IA1340	A3017	Alternator
IA1348	A0082	Alternator
IA1414	A3052	Alternator
IA1416	A3073	Alternator
IA1418	A3037	Alternator
IA1430	A0142	Alternator
IA1432	A0160	Alternator
IA1435	A3074	Alternator
IA1436	A0165	Alternator
IA1437	A3034	Alternator
IA1439	A3035	Alternator
IA9003	A2005	Alternator
IA9015	A2001	Alternator
IA9026	A4028	Alternator
IA9027	A4045	Alternator
IA9028	A4035	Alternator
IA9407	A0010	Alternator
IA9412	A0007	Alternator
IA9413	A0011	Alternator
IA9414	A0001	Alternator
IA9418	A0033	Alternator
IA9419	A0058	Alternator
IA9420	A0026	Alternator
IA9423	A0023	Alternator
IA9424	A1009	Alternator
IA9425	A0035	Alternator
IA9426	A1011	Alternator
IA9429	A0007	Alternator
IA9432	A0025	Alternator
IA9433	A0107	Alternator
IA9439	A0136	Alternator
IA9442	A0002	Alternator
IA9443	A0007	Alternator
IA9444	A0011	Alternator
IA9445	A0007	Alternator
IS0179	S9061	Starter
IS0201	S0114	Starter
IS0203	S0152	Starter
IS0216	S4021	Starter
IS0403	S9055	Starter
IS0407	S0002	Starter
IS0408	S4018	Starter
IS0417	S9009	Starter
IS0490	S0092	Starter
IS0505	S9008	Starter
IS0520	S4001	Starter
IS0521	S9052	Starter
IS0526	S9051	Starter
IS0532	S0111	Starter
IS0533	S9056	Starter
IS0537	S0041	Starter
IS0551	S9044	Starter
IS0552	S9044	Starter
IS0558	S0217	Starter
IS0567	S0174	Starter
IS0569	S9056	Starter
IS0597	S3047	Starter
IS0598	S0150	Starter
IS0632	S4001	Starter
IS0642	S0084	Starter
IS0646	S3001	Starter
IS0647	S0069	Starter
IS0664	S9043	Starter
IS0669	S9043	Starter
IS0688	S9054	Starter
IS0706	S9043	Starter
IS0711	S4018	Starter
IS0728	S1015	Starter
IS0729	S0085	Starter
IS0730	S0078	Starter
IS0762	S9056	Starter
IS0763	S4022	Starter
IS0772	S0014	Starter
IS0773	S0039	Starter
IS0790	S3015	Starter
IS0862	S9054	Starter
IS0875	S9051	Starter
IS0957	S3052	Starter
IS1040	S0027	Starter
IS1042	S3026	Starter
IS1075	S3002	Starter
IS1078	S0019	Starter
IS1169	S0080	Starter
IS1170	S3009	Starter
IS1174	S3003	Starter
IS1175	S0096	Starter
IS1190	S0024	Starter
IS1216	S3032	Starter
IS1263	S0152	Starter
IS1264	S0082	Starter
IS1265	S0088	Starter
IS1269	S0089	Starter
IS1279	S3045	Starter
IS1285	S0214	Starter
IS1286	S3018	Starter
IS1296	S0070	Starter
IS9142	S0019	Starter
IS9143	S0071	Starter
IS9144	S1017	Starter
IS9145	S0109	Starter
IS9146	S0097	Starter
IS9147	S0076	Starter
IS9148	S0024	Starter
IS9149	S0076	Starter
IS9305	S0016	Starter
IS9307	S0087	Starter
IS9311	S0030	Starter
IS9312	S0146	Starter
IS9319	S2005	Starter
IS9327	S0104	Starter
IS9332	S9014	Starter
IS9333	S0127	Starter
IS9334	S2001	Starter
IS9335	S5009	Starter
IS9403	S3004	Starter
IS9404	S3032	Starter
IS9412	S0072	Starter
IS9414	S3013	Starter
IS9416	S3052	Starter
IS9418	S9002	Starter
IS9421	S0058	Starter
IS9422	S0031	Starter
IS9423	S0226	Starter
IS9424	S0136	Starter
IS9426	S0241	Starter
IS9427	S0141	Starter
IS9428	S3040	Starter
IS9430	S0029	Starter
IS9431	S3055	Starter
IS9432	S0094	Starter
IS9433	S0046	Starter
IS9434	S0144	Starter
IS9435	S0043	Starter
IS9436	S0064	Starter
IS9437	S0042	Starter
IS9438	S0018	Starter
IS9441	S3008	Starter
IS9442	S3012	Starter
ISJ0001	S5002	Starter
ISJ0002	S5016	Starter
ISJ0006	S3053	Starter
ISJ0010	S5046	Starter

ISUZU	AS	PRODUCT
1-81100-189-1	S6027	Starter
1-81100-246-1	S6030	Starter
1-81100022-1	S9007	Starter
1-81100022-4	S9007	Starter
1-81116-049-0	SB6008	Sta. Brush set
1-81121044-0	SA6006	Starter armature
1-81122029-0	SD2023	Drive
1-81151054-0	SS2014	Starter solenoid
1-81200205-0	A9028	Alternator
1-81200209-0	A9028	Alternator
1-81200365-0	A9028	Alternator
1-81260015-0	ARE9032	Regulator
1-81270001-0	ARE9031	Regulator
4HK1	S9068	Starter
5-80215013-0	AB2005	Alt. Brush set
5-80218033-0	ARC2013	Rectifier
5-81100128-0	S2003	Starter
5-81100128-1	S2003	Starter
5-81100195-0	S2003	Starter
5-81121002-1	SA2007	Starter armature
5-81121021-0	SA2007	Starter armature
5-81121029-0	SA6005	Starter armature
5-81121031-0	SA6004	Starter armature
5-81123002-0	SD2001	Drive
5-81123007-0	SD2001	Drive
5-81123034-0	SD6010	Drive
5-81124003-0	SD6005	Drive
5-81124004-0	SD6006	Drive
5-81124006-0	SD6005	Drive
5-81151015-0	SS2005	Starter solenoid
5-81151029-0	SS2005	Starter solenoid
5-81151054-0	SS2014	Starter solenoid
5-81200316-1	A2028	Alternator
5-81200382-0	A9028	Alternator
5-81215012-0	AB2005	Alt. Brush set
5-81215013-0	AB2005	Alt. Brush set
5-81218027-0	ARC2012	Rectifier
5-81218029-0	ARC2012	Rectifier
5-81270002-0	ARE2003	Regulator
5811001662	S6004	Starter
5811001663	S6004	Starter
5811001664	S6004	Starter
5811001830	S6004	Starter
5812003162	A2028	Alternator
5812003163	A2028	Alternator
8-01978571-0	IM1001	Ignition Module
8-01979571-0	IM1001	Ignition Module
8-10496541-0	IM1002	Ignition Module
8-11530018-0	SS2005	Starter solenoid
8-91323935-2	S2022	Starter
8-92064181-0	S0098	Starter
8-93300418-0	S0031	Starter
8-94072330-0	A2010	Alternator
8-94100450-2	A2010	Alternator
8-94115568-0	SD2004	Drive
8-94116432-0	ARC2004	Rectifier
8-94122488-4	A2004	Alternator
8-94123052-0	ARC6009	Rectifier
8-94125884-0	ARC6001	Rectifier
8-94125889-0	SD6008	Drive
8-94129187-0	SD6012	Drive
8-94136900-0	SB2006	Sta. Brush set
8-94136901-0	SBH2001	S. Brush holder
8-94137345-0	ARC6009	Rectifier
8-94139012-0	ARE6004	Regulator
8-94147549-2	S2006	Starter
8-94149250-0	SD2008	Drive
8-94152967-0	SA2015	Starter armature
8-94156595-0	ARE2007	Regulator
8-94160638-0	ARC6005	Rectifier
8-94167410-0	ARE2004	Regulator
8-94167411-0	ARC2011	Rectifier
8-94167426-0	SA6007	Starter armature
8-94208295-0	SBU9031	Bushing
8-94208303-0	SS2009	Starter solenoid
8-94218767-0	SA2004	Starter armature
8-94218772-0	SS2009	Starter solenoid
8-94223937-0	ARE2002	Regulator
8-94223968-0	ARC2006	Rectifier
8-94233277-0	SD2018	Drive
8-94237728-0	ARE2003	Regulator
8-94237729-0	ARC2002	Rectifier
8-94242059-0	SA2001	Starter armature
8-94246957-0	ARC2013	Rectifier
8-94246957-1	ARC2013	Rectifier
8-94246971-1	ARC2013	Rectifier
8-94250964-0	ARE2003	Regulator
8-94254922-1	S2003	Starter
8-94310599-0	ARE2010	Regulator
8-94332581-1	A2026	Alternator
8-94332581-2	A2026	Alternator
8-94333438-0	S2003	Starter
8-94361908-0	SS6009	Starter solenoid
8-94367772-0	SD6026	Drive
8-94377252-0	SD6027	Drive
8-94382059-0	A2004	Alternator
8-94382059-1	A2004	Alternator
8-94382060-0	A2004	Alternator
8-94401793-2	A2028	Alternator
8-94404652-0	A2010	Alternator
8-94405044-2	A2028	Alternator
8-94419519-1	A2004	Alternator
8-94424362-0	ARC2023	Rectifier
8-94424388-0	SBH2001	S. Brush holder
8-94429977-2	S2006	Starter
8-94433912-0	S6022	Starter
8-94433912-1	S6022	Starter
8-94435561-0	SA2001	Starter armature
8-94435563-0	SD2020	Drive
8-94449054-0	A2027	Alternator
8-94449054-2	A2027	Alternator
8-94449781-0	ARE6009	Regulator
8-94452134-3	A2027	Alternator
8-94452739-0	A2027	Alternator
8-94452739-2	A2027	Alternator
8-94452740-3	A2027	Alternator
8-94455160-0	ARE6019	Regulator
8-94455173-0	SD6011	Drive
8-94455973-0	A2010	Alternator
8-94460417-0	S6022	Starter
8-94460417-1	S6022	Starter
8-94471996-3	A2020	Alternator
8-94471996-4	A2020	Alternator
8-94472330-0	A2010	Alternator
8-94473330-0	A2010	Alternator
8-94478863-0	SBH2001	S. Brush holder
8-97032091-0	ARE6004	Regulator
8-97032464-2	S2008	Starter
8-97037724-1	A2004	Alternator
8-97041790-0	A2005	Alternator
8-97044779-0	A2020	Alternator
8-97062649-0	ARE2034	Regulator
8-97065526-0	S2008	Starter
8-97074611-0	A2025	Alternator
8-97095811-0	S2008	Starter
8-97095811-2	S2008	Starter
8-97112549-0	S6022	Starter
8-97113118-0	A2005	Alternator
8-97113118-1	A2005	Alternator
8-97113770-0	A2004	Alternator
8-97116088-0	A2017	Alternator
8-97118542-0	S2006	Starter
8-97122639-0	AR2003	Rotor
8-97122643-0	ARE2009	Regulator
8-97122644-0	ARC2016	Rectifier
8-97136688-0	S6022	Starter
8-97143011-0	A2018	Alternator
8-97146338-3	S6022	Starter
8-97147851-0	A2025	Alternator
8-97150200-0	A2001	Alternator
8-97150200-1	A2001	Alternator
8-97150201-0	A2016	Alternator
8-97150201-1	A2016	Alternator
8-97161793-0	SD2024	Drive
8-97171611-0	A2025	Alternator
8-97182-957-0	ARE2018	Regulator
8-97187655-0	A2025	Alternator
8-97189112-2	A2011	Alternator
8-97189112-3	A2011	Alternator
8-97189112-4	A2011	Alternator
8-97189112-5	A2011	Alternator
8-97189112-6	A2011	Alternator
8-97189113-3	A2003	Alternator
8-97189113-4	A2003	Alternator
8-97189113-5	A2003	Alternator
8-97189113-6	A2003	Alternator
8-97189113-7	A2003	Alternator
8-97189113-8	A2003	Alternator
8-97210505-0	S6022	Starter
8-97215992-2	A2037	Alternator
8-97216186-1	S2022	Starter
8-97369507-0	A2022	Alternator
8-97369507-1	A2022	Alternator
8-97369507-2	A2022	Alternator
8-97369508-0	A2022	Alternator
8-97434762-0	A2025	Alternator
8-98056441-0	A2022	Alternator
8-98070063-0	S9068	Starter
8-98070321-1	S9068	Starter
8943325860	S2002	Starter
8943876530	S2010	Starter
8944050440	A2028	Alternator
8944489590	S6004	Starter
8944489591	S6004	Starter
8944532120	S6004	Starter
8944719961	A2020	Alternator

ISUZU	AS	PRODUCT
8970626410	A2032	Alternator
8970716110	A2025	Alternator
8970739241	A2004	Alternator
8971128650	S6004	Starter
8971128651	S6004	Starter
8971128652	S6004	Starter
8971177690	S2002	Starter
8971333690	S2004	Starter
8971333691	S2004	Starter
8971333692	S2004	Starter
8971338540	A2032	Alternator
8971347620	A2025	Alternator
8971348660	A2032	Alternator
8971353432	S6004	Starter
8971370090	A2004	Alternator
8971463383	S2010	Starter
8971502030	S2004	Starter
8971502040	S2002	Starter
8971502041	S2002	Starter
8971777690	S2002	Starter
8971839130	S2006	Starter
8971876540	A2004	Alternator
8971876570	A2004	Alternator
8971891139	A2003	Alternator
8971891180	S2001	Starter
8971891181	S2001	Starter
8972105050	S2010	Starter
8972236530	S2010	Starter
8972410210	A2001	Alternator
8972553901	S2010	Starter
8972873923	A2003	Alternator
8972873924	A2003	Alternator
8973234370	S2010	Starter
8973261800	A2003	Alternator
8973261801	A2003	Alternator
8973551980	A2038	Alternator
8973551981	A2038	Alternator
8973551982	A2038	Alternator
8973695081	A2022	Alternator
8973860620	S2001	Starter
8980147430	S2001	Starter
8980542550	A2003	Alternator
8980564430	A2038	Alternator
8980568670	A2003	Alternator
9-82114151-0	SB2014	Sta. Brush set
9-82114152-0	SB2014	Sta. Brush set
9-82121231-0	SD2023	Drive
9-82121238-0	SD2001	Drive
9-82122380-0	SD2001	Drive
9-82150052-0	SS2001	Starter solenoid
9-82150071-0	SS2001	Starter solenoid

IVECO	AS	PRODUCT
1305709080	A4006	Alternator
1315060080	A4006	Alternator
131955508	S4017	Starter
1320921080	S3002	Starter
1332419080	S3002	Starter
2995104	S0080	Starter
2995138	S6023	Starter
2995980	A0136	Alternator
2995986	S0082	Starter
2995988	S6005	Starter

IVECO	AS	PRODUCT
42498145	S0092	Starter
42498148	S0221(BOSCH)R	Starter
42498619	S0221(BOSCH)R	Starter
42498678	S0018	Starter
42498714	S6023	Starter
42530140	ARE0035	Regulator
42532975	ARE0053	Regulator
4782801	S0220(BOSCH)R	Starter
4839041	S0012	Starter
4892318	A0074	Alternator
4892320	A0072	Alternator
4892338	S0082	Starter
500307724	S0099	Starter
500314723	A0033	Alternator
500315943	A0136	Alternator
500317453	A0149	Alternator
500317543	A0149	Alternator
500325137	S0080	Starter
500325145	S0081	Starter
500325146	S0110	Starter
500331736	A0136	Alternator
500332014	A0022	Alternator
500333269	S0152	Starter
500333271	S9055	Starter
500335719	A0075	Alternator
500337394	A0136	Alternator
500338952	S0081	Starter
500338953	S0152	Starter
504009978	A0147	Alternator
504028095	A0136	Alternator
504036695	S0179	Starter
504059251	S0081	Starter
504060771	A0082	Alternator
504065776	A0136	Alternator
504071135	A0075	Alternator
504086888	S0099	Starter
504087183	A0150	Alternator
504109413	A0136	Alternator
504114396	A0136	Alternator
504114397	A0136	Alternator
504201467	S0099	Starter
504225815	A0228	Alternator
551959670	S0139	Starter
69502571	S0099	Starter
8029647	S0089	Starter
8199087	ARE0035	Regulator
93159768	SD0050	Drive
93828721	S0018	Starter
98417208	A4029	Alternator
98417209	A4029	Alternator
98419035	A0023	Alternator
98424452	A0025	Alternator
98424453	A0025	Alternator
98424739	A0025	Alternator
98424748	A0025	Alternator
98449163	A0025	Alternator
99432760	S6023	Starter
99451752	A0033	Alternator
99451753	S0018	Starter
99454112	A0023	Alternator
99473468	A0033	Alternator
99475009	A0033	Alternator

IVECO	AS	PRODUCT
99476768	A0033	Alternator
99477271	A0136	Alternator
99486046	S6005	Starter
J&N	**AS**	**PRODUCT**
171-01000	ARD9001	Diode
171-01001	ARD9002	Diode
171-01002	ARD9004	Diode
206-52002	AFP9008	FW pulley
JAGUAR	**AS**	**PRODUCT**
37H6913	ARC4010	Rectifier
607688	ARC4010	Rectifier
90607688	ARC4010	Rectifier
ERR6087	S0106	Starter
ESR2191	S0106	Starter
UKC1662	ARC4010	Rectifier
XR822418	A6029	Alternator
JAPANESE	**AS**	**PRODUCT**
FBH-32	SBU9031	Bushing
FBM-10	SBU9041	Bushing
FBM-38	SBU9030	Bushing
FBN-14	SBU9032	Bushing
JASX15-6	SB2013	Sta. Brush set
JASX49-61	SB2009	Sta. Brush set
JASX50-51	SB2008	Sta. Brush set
JASX54-55	SB2010	Sta. Brush set
JASX64-65-67	SB2011	Sta. Brush set
JASX70	SB5007	Sta. Brush set
JASX90	SB5008	Sta. Brush set
JHTSX-17	SB2001	Sta. Brush set
JHTSX-28	SB2002	Sta. Brush set
JHTSX-31	SB2003	Sta. Brush set
JHTSX-36	SB2004	Sta. Brush set
JHTSX-37	SB2005	Sta. Brush set
JHTSX-38	SB2001	Sta. Brush set
JHTSX-40	SB2006	Sta. Brush set
JHTSX-8M	SB2013	Sta. Brush set
JHTX-18	AB2005	Alt. Brush set
JHTX-23	AB2001	Alt. Brush set
JHTX-27	AB5006	Alt. Brush set
JHTX-6	AB2006	Alt. Brush set
JMTSX-36	SB5007	Sta. Brush set
JMTSX-37	SB5011	Sta. Brush set
JMTSX-48	SB5008	Sta. Brush set
JMTSX-49	SB5001	Sta. Brush set
JMTSX-49N	SB5001	Sta. Brush set
JMTSX-55	SB5002	Sta. Brush set
JMTX-14	AB5001	Alt. Brush set
JMTX-20	AB5008	Alt. Brush set
JMTX-22	AB5003	Alt. Brush set
JMTX-33	AB5005	Alt. Brush set
JMTX-41	AB5006	Alt. Brush set
JNDSX-31	SB6006	Sta. Brush set
JNDSX-32	SB6001	Sta. Brush set
JNDSX-33	SB6004	Sta. Brush set
JNDSX-34	SB6002	Sta. Brush set
JNDSX-35	SB6003	Sta. Brush set
JNDSX-39	SB6005	Sta. Brush set
JNDX-11	AB6001	Alt. Brush set
JNDX-30	AB6002	Alt. Brush set
JNDX-32	AB6003	Alt. Brush set
JNDX-33	AB6004	Alt. Brush set
JNDX-34	AB6005	Alt. Brush set

JCB	AS	PRODUCT
714-32300	A4031	Alternator
714/35600	S0188	Starter

JEEP	AS	PRODUCT
8953002125	S0031	Starter
9893503480	S0031	Starter

JOHN DEERE	AS	PRODUCT
AL110503	S9056	Starter
AL110504	S9056	Starter
AL111675	A0114	Alternator
AL114092	A0114	Alternator
AL11503	S9056	Starter
AL27374	ARC0061	Rectifier
AL41247	S0112	Starter
AL62690	S0112	Starter
AL62691	S9056	Starter
AL62773	S9056	Starter
AL78689	A0089	Alternator
AL78760	S9056	Starter
AL81438	A0089	Alternator
AM878176	S2019	Starter
AM878813	S2019	Starter
AR62401	A0013	Alternator
AR70436	S9056	Starter
AR70437	S9056	Starter
AT161324	A0185	Alternator
AT23401	S9056	Starter
AT330320	A0138	Alternator
AZ23575	A0013	Alternator
AZ24486	ARC0061	Rectifier
RE500733	S9056	Starter
RE51725	S1019	Starter
RE52150	S1019	Starter
RE522738	S1019	Starter
RE60384	S9056	Starter
TY6684	ARE6020	Regulator

JUMZ	AS	PRODUCT
123708002	S9022	Starter

JUST PARTS	AS	PRODUCT
D11472	ARD9001	Diode

KHD	AS	PRODUCT
01174645	S0011	Starter
01180928KZ	S0129	Starter
01180995KZ	S0066	Starter
01182233KZ	S0129	Starter
1161384	S9044	Starter
1163669	S9044	Starter
1164668	S9044	Starter
1164669	S9044	Starter
1164994	S9044	Starter
1170051	S9044	Starter
1171988	S0245	Starter
1173240	S9044	Starter
1174166	S9044	Starter
1174167	S9044	Starter
1174649	S0245	Starter
1175726	S9044	Starter
1175886	S9044	Starter
1178511	A0002	Alternator
1179319	S0174	Starter
1180180	S0066	Starter
1180443	ARE0035	Regulator

KHD	AS	PRODUCT
1180804	S0068	Starter
1180805	S0174	Starter
1180928	S0129	Starter
1180928KZ	S0129	Starter
1181753	S0182	Starter
1181976	S0129	Starter
1182126	S0182	Starter
1182233KZ	S0129	Starter
1182390	S0182	Starter
12187645	S9043	Starter
1308106	SBR0005	Starter bracket
B13R12X4H7622	S9044	Starter
B15R12X3H762	S9044	Starter
B23R12X3H7622	S9044	Starter
B28R12X4H7622	S9044	Starter
B4R12X3H7622	S9044	Starter
D8R24X6H762	S0245	Starter

KIA	AS	PRODUCT
0B6S818400	S5034	Starter
0K24018400	S5012	Starter
0K24118400	S5012	Starter
0K24118400A	S5012	Starter
0K32618400	S5012	Starter
0K55218400	S6008	Starter
0K55218400A	S6008	Starter
0K71118400	S6002	Starter
0K71118400A	S6002	Starter
0K71F18400B	S6002	Starter
0K90018400	S5012	Starter
0K90018400B	S5012	Starter
0R20118400	S6002	Starter
0R20118400B	S6002	Starter
36100-23160	S3053	Starter
36100-29000	S3002	Starter
36100-2Y100	S5012	Starter
36100-42010	S5005	Starter
36100-42011	S5005	Starter
36100-42050	S5006	Starter
36100-42250	S5026	Starter
36100-42350	S5026	Starter
36120-11140	SS5005	Starter solenoid
36120-21740	SS5002	Starter solenoid
36145-32510	SD5005	Drive
36150-11150	SA5009	Starter armature
36150-32500	SA5011	Starter armature
36150-32510	SA5011	Starter armature
36173-11140	SB5001	Sta. Brush set
37300-29000	A3022	Alternator
37300-38710	A9017	Alternator
37300-42010	A5007	Alternator
37300-42200	A5006	Alternator
37300-42202	A5006	Alternator
37300-42354	A9001	Alternator
37300-42356	A9001	Alternator
37300-42359	A9001	Alternator
37300-42360	A9001	Alternator
37300-42502	A9007	Alternator
37300-42621	A9007	Alternator
37300-43860	A5011	Alternator
37300-47400	A9007	Alternator
37300-47450	A9007	Alternator
37300-4A003	A9019	Alternator

KIA	AS	PRODUCT
37300-4X003	A9018	Alternator
MB35918400A	S5034	Starter
OB6S818400	S5034	Starter
OK24018400	S5012	Starter
OK24118400	S5012	Starter
OK24118400A	S5012	Starter
OK32618400	S5012	Starter
OK552-18-400	S6008	Starter
OK55218400A	S6008	Starter
OK588-18-W11	AFP1001	FW pulley
OK601-18-400	S9003	Starter
OK711-18-400	S6002	Starter
OK71118400A	S6002	Starter
OK71F18400B	S6002	Starter
OK90018400	S5012	Starter
OK90018400B	S5012	Starter
OK90018400C	S5012	Starter

KOMATSU	AS	PRODUCT
15852-63020	SS5004	Starter solenoid
16611-63041	SD6027	Drive
19837-63070	SD5013	Drive
600-813-3320	S9034	Starter
600-813-3630	S9006	Starter
600-813-3632	S9006	Starter
600-813-3660	S9005	Starter
600-813-4420	S9034	Starter
600-813-4422	S9034	Starter
600-813-4670	S9006	Starter
600-821-3350	A9024	Alternator
600-821-3370	A9024	Alternator
600-821-5580	A9027	Alternator
600-821-6120	A9027	Alternator
600-821-6130	A9027	Alternator
600-821-6150	A9025	Alternator
600-821-6190	A9025	Alternator

KOYO	AS	PRODUCT
319	ABE9023	Bearing
333	ABE9024	Bearing
336	ABE9017	Bearing
348	ABE9031	Bearing
382	ABE9026	Bearing
883	ABE9026	Bearing
949100-279	ABE9016	Bearing
949100-317	ABE9036	Bearing
WCPN36RC4X	AFP6012	FW pulley

KUBOTA	AS	PRODUCT
14182-63041	SD6006	Drive
15504-63041	SD6003	Drive
15521-63041	SD6012	Drive
15881-64851	ARC6007	Rectifier
16871-63041	SD6003	Drive
17381-63041	SD6025	Drive
19212-63041	SD6003	Drive

LADA	AS	PRODUCT
2100-3708000	S0128	Starter
2101-3708000	S0128	Starter
2101-3708010	S0128	Starter
2101-3708620	SD4004	Drive
2103-12VIP54	S9008	Starter
2108-3701010	ARE9001	Regulator
2108-3701500	ARE9001	Regulator

LADA	AS	PRODUCT
2108-370150099	ARE9008	Regulator
2108-3708010	S9008	Starter
2108-3708010-6	S9008	Starter
2108-3708620	SD9001	Drive
2110-3708010	S9009	Starter
2110-3708620	SD9031	Drive
21213-3708010	S0128	Starter
221-3708000	S0128	Starter
224370701	ARE9008	Regulator
293708	S9008	Starter
3101-3708000	S0128	Starter
3708000	S0128	Starter
4233708	S0128	Starter
4243708	S9008	Starter
4253708	S0128	Starter
4263708	S9008	Starter
5702.3708	S9009	Starter
5712.3708	S9008	Starter
5722.3708	S0128	Starter
CT221128	S0128	Starter
CT22112B	S0128	Starter
CT2213708000	S0128	Starter
KAT3K29.3708	S9008	Starter
KAT3K35.3708	S0128	Starter
KAT3KCT221126	S0128	Starter
T2223701010	ARE9008	Regulator

LAMBORGHINI	AS	PRODUCT
294390706	ARC0061	Rectifier
294391002	ARC0061	Rectifier

LANDINI	AS	PRODUCT
3648190M92	S9051	Starter

LECLERQ	AS	PRODUCT
009-0396	ARD9004	Diode

LEECE-NEVILLE	AS	PRODUCT
04489	SD1005	Drive
26853	ABE9004	Bearing
29656	ABE9038	Bearing
57166	ABE9040(NSK)	Bearing
64235	SD1015	Drive
71123	ABE9004	Bearing
71157	SD0029	Drive
73493	SD0029	Drive
74977	SD0029	Drive
75249	SD3026	Drive
77600	SD1003	Drive
77601	SD1005	Drive
97222	SD0029	Drive
M029075429	SD3026	Drive
M029097222	SD0029	Drive

LESTER	AS	PRODUCT
11231	AFP9008	FW pulley
16563	S9056	Starter
17095	S9056	Starter
17467	SD5039	Drive

LEYLAND/DAF	AS	PRODUCT
BAU5266	ARC4002	Rectifier
RTC5045	ARC4002	Rectifier

LITENS	AS	PRODUCT
04861506AB	AFP9008	FW pulley
04861506AC	AFP9008	FW pulley
04861506AD	AFP9008	FW pulley
04861506AE	AFP9008	FW pulley
04861506AG	AFP9008	FW pulley
600726	AFP6017	FW pulley
600801	AFP0063	FW pulley
600954	AFP6017	FW pulley
920501	AFP0026	FW pulley
920574	AFP0013	FW pulley
920583	AFP9004	FW pulley
920586	AFP0041	FW pulley
920615	AFP6008	FW pulley
920629	AFP0054	FW pulley
920720	AFP6008	FW pulley
920726	AFP6017	FW pulley
920731	AFP0064	FW pulley
920755	AFP0061	FW pulley
920796	AFP0062	FW pulley
920801	AFP0063	FW pulley
920802	AFP6014	FW pulley
920850	AFP0060	FW pulley
920954	AFP6017	FW pulley

LOMBARDINI	AS	PRODUCT
58401990	S0232	Starter
58402090	S0232	Starter

LUCAS	AS	PRODUCT
000028000010	ARE4001	Regulator
000028001010	ARE4001	Regulator
000028002010	ARE4002	Regulator
000028500010	ARC4006	Rectifier
000028506010	ARC4006	Rectifier
000076892010	SS4005	Starter solenoid
000076899010	SS4007	Starter solenoid
000077034010	SS4005	Starter solenoid
000077035010	SS4007	Starter solenoid
000077121010	SS4017	Starter solenoid
000077122010	SS4012	Starter solenoid
000077132010	SS4017	Starter solenoid
000077133010	SS4017	Starter solenoid
000077136010	SS4013	Starter solenoid
000077174010	SS4023	Starter solenoid
000077177010	SS4023	Starter solenoid
000077204010	SS4023	Starter solenoid
000077269010	SS4009	Starter solenoid
000084454010	ARC4002	Rectifier
000084456010	ARC4005	Rectifier
000084469010	ARC4004	Rectifier
000084499010	ARC4002	Rectifier
000084574010	ARC4011	Rectifier
000084885010	ARC4002	Rectifier
000084886010	ARC4004	Rectifier
054206164010	AS4003	Stator
054206343010	ABR4009	Bracket
054206506010	ABR4015	Bracket
054206516010	ABR4008	Bracket
054207302010	ABR4015	Bracket
054207624010	ABR4015	Bracket
054208234010	ABR4015	Bracket
054208671010	AR4004	Rotor
054209807010	ABR4009	Bracket
054220141010	ABR4008	Bracket

LUCAS	AS	PRODUCT
054220400010	ABR4022	Bracket w/stator
054247034010	SD4002	Drive
054268140010	SD4017	Drive
054268141010	SD4002	Drive
054269554010	SA4014	Starter armature
054290585010	SD4013	Drive
054291911010	SD4034	Drive
054294409010	SA4002	Starter armature
054294817010	SD4028	Drive
054294922010	SD4002	Drive
063321096	A4065	Alternator
063321112	A4065	Alternator
063321409	A4065	Alternator
063602106010	SS4020	Starter solenoid
063602502010	SS4001	Starter solenoid
063621503010	ARC4009	Rectifier
063621603010	ARC4009	Rectifier
063622601010	ARC4009	Rectifier
063622901010	ARC4017	Rectifier
063623001010	ARC4009	Rectifier
063623602010	ARC4015	Rectifier
063623701010	ARC4007	Rectifier
063624201010	ARC4016	Rectifier
063624301010	ARC4013	Rectifier
063625002000	ARC4018	Rectifier
063625003010	ARC4019	Rectifier
063626002010	ARC4020	Rectifier
063633806010	SS4003	Starter solenoid
063633933010	SS4004	Starter solenoid
064826040010	ARC4023	Rectifier
072139001010	SD4005	Drive
072382301010	SA4012	Starter armature
074899021010	SA4001	Starter armature
074988801010	AR4005	Rotor
083220461010	SBH4004	S. Brush holder
083224461010	SBH4003	S. Brush holder
083225127010	SA4006	Starter armature
083226564010	SF4001	Starter field coil
083226902010	SA4019	Starter armature
083227126010	SA4004	Starter armature
083227131010	SBH4004	S. Brush holder
083227260010	SBH4004	S. Brush holder
083227678010	SA4006	Starter armature
083600011010	AR4003	Rotor
083602381000	ARE4006	Regulator
083602761010	AS4001	Stator
083603211010	ABR4029	Bracket
083604791010	ABR4031	Bracket
083605011010	AS4004	Stator
083606411010	ARE4015	Regulator
083606411020	ARE4015	Regulator
083606521010	AR4003	Rotor
083607021010	ABR4032	Bracket
083608351010	ABR4003	Bracket w/stator
083608541010	ABR4019	Bracket w/stator
083609171010	ABR4021	Bracket w/stator
083610231010	ARC4012	Rectifier
083611391010	ABR4004	Bracket w/stator
083613651010	ABR4004	Bracket w/stator
083613781010	ABR4023	Bracket w/stator
083614611010	ABR4027	Bracket
083615621010	ABR4024	Bracket w/stator

LUCAS	AS	PRODUCT
083615871010	ABR4002	Bracket
083615891010	ABR4002	Bracket
083615991010	ABR4005	Bracket
083616611010	ABR4016	Bracket
083620581010	ABR4023	Bracket w/stator
083621391010	ABR4035	Bracket
083623581010	ABR4002	Bracket
083623631010	ABR4005	Bracket
083624941010	ABR4025	Bracket w/stator
083627781010	ARE4011	Regulator
083631901010	ARE4005	Regulator
085540011010	SS4003	Starter solenoid
085540141010	SD4015	Drive
085540151010	SD4016	Drive
085540191010	SD4016	Drive
085540211010	SS4004	Starter solenoid
085540221010	SS4003	Starter solenoid
085540321010	SD4019	Drive
085540381010	SD4009	Drive
085540431010	SD4014	Drive
085540451010	SD4014	Drive
085540481010	SD4011	Drive
085540491010	SD4007	Drive
085540521010	SD4012	Drive
085540601010	SD4006	Drive
085540611010	SD4007	Drive
085540681010	SD4021	Drive
085540711010	SS4015	Starter solenoid
085540922010	SS4022	Starter solenoid
085540971010	SD4023	Drive
085540981010	SS4010	Starter solenoid
085541040010	SD4019	Drive
085541050010	SD4030	Drive
085541070010	SS4018	Starter solenoid
085541080010	SD4025	Drive
085541220010	SD4033	Drive
085541250010	SD4031	Drive
085541320010	SS4017	Starter solenoid
085541322010	SS4017	Starter solenoid
085541323010	SS4012	Starter solenoid
085541325010	SS4017	Starter solenoid
085541360010	SS4008	Starter solenoid
085541420010	SS4020	Starter solenoid
085541454010	SD4002	Drive
085541459010	SD4017	Drive
085541462010	SD4013	Drive
085541466010	SD4013	Drive
085541470010	SD4035	Drive
085541479010	SD4002	Drive
085541488010	SD4034	Drive
085541490010	SD4002	Drive
085541496010	SD4037	Drive
085541503010	SD4022	Drive
085541538010	SD4008	Drive
085541541010	SD4037	Drive
085541544010	SD4034	Drive
085541560010	SS4002	Starter solenoid
085541670010	SS4020	Starter solenoid
085541680010	SD4031	Drive
085541700010	SD4032	Drive
085541740010	SS4008	Starter solenoid
085541780010	SD4023	Drive

LUCAS	AS	PRODUCT
085541820010	SS4011	Starter solenoid
085541870010	SD4027	Drive
085541990010	SS4021	Starter solenoid
085552104010	ARC4019	Rectifier
085552105010	ARC4016	Rectifier
085552110010	ARC4018	Rectifier
085561051010	AP4002	Pulley
085561211010	AP4001	Pulley
085561411010	AR4002	Rotor
085561421010	AR4002	Rotor
085562071010	AR4002	Rotor
085562131010	AR4002	Rotor
085562208010	AR4002	Rotor
085562270010	AR4002	Rotor
085562283010	AR4002	Rotor
085562541010	ARE4011	Regulator
085562731010	ARE4012	Regulator
085562741010	AP4005	Pulley
085562751010	AFP4001	FW pulley
085562881010	ARE4012	Regulator
085562931010	AFP4001	FW pulley
085563011010	ARE4005	Regulator
085563481010	ARE4013	Regulator
085563491010	ARE4014	Regulator
21220253	ARE3018	Regulator
21220353	ARE3018	Regulator
21220361	ARC4001	Rectifier
2122121	ARE4003	Regulator
21221350	ARE0027	Regulator
21221397	ARE0037	Regulator
21221401	ARE0031	Regulator
21221412	ARE0004	Regulator
21222081	ARE4009	Regulator
21222106	ARE4009	Regulator
21222123	ARE4006	Regulator
21222124	ARC4008	Rectifier
21222125	ARC4009	Rectifier
21222127	ARE4003	Regulator
21224162	ARC3002	Rectifier
21224163	ARC3027	Rectifier
21225183	ARE3003	Regulator
21225345	ARE3004	Regulator
21225370	ARE3011	Regulator
21225371	ARE3003	Regulator
21225372	ARE3013	Regulator
21225377	ARC3019	Rectifier
21225379	ARC3010	Rectifier
21225386	ARC3001	Rectifier
21225387	ARC3004	Rectifier
21225388	ARC3006	Rectifier
21225389	ARC3007	Rectifier
21225390	ARC3017	Rectifier
21225391	ARC3025	Rectifier
21225394	ARC3008	Rectifier
21225399	ARC3005	Rectifier
21225400	ARC3003	Rectifier
21225416	ARC3026	Rectifier
21225417	ARE3003	Regulator
21225422	ARE3011	Regulator
21226042	ARE1001	Regulator
21226061	ARE1001	Regulator
21226104	ARE1010	Regulator

LUCAS	AS	PRODUCT
21226108	ARE1009	Regulator
21228081	ARE4009	Regulator
21229047	ARE3017	Regulator
21229114	ARE3017	Regulator
21229141	ARE3017	Regulator
21229189	ARE9001	Regulator
21229199	ARE3001	Regulator
21229219	ARE3022	Regulator
21229491	ARE3017	Regulator
2131030	ARC0062	Rectifier
2131049	ARE3002	Regulator
21510068	ARE6001	Regulator
21510071	ARE6006	Regulator
21510072	ARE6008	Regulator
21511095	ARE5032	Regulator
21511101	ARC2007	Rectifier
21511102	ARC2001	Rectifier
21511103	ARC2005	Rectifier
21511104	ARC2002	Rectifier
21511105	ARC2006	Rectifier
21511106	ARE2007	Regulator
21511107	ARC2011	Rectifier
21511108	ARE2028	Regulator
21511109	ARE2012	Regulator
21511113	ARE2002	Regulator
21511114	ARE2003	Regulator
21511116	ARE5032	Regulator
21511118	ARC5022	Rectifier
21511122	ARC5015	Rectifier
21513100	ARC5020	Rectifier
21513103	ARE5001	Regulator
21513105	ARC5025	Rectifier
21513106	ARE5002	Regulator
21513107	ARC5017	Rectifier
21513125	ARE5005	Regulator
21513126	ARE5026	Regulator
21513127	ARE5014	Regulator
21513129	ARC5002	Rectifier
21513130	ARC5016	Rectifier
21513132	ARC5053	Rectifier
21513134	ARC5018	Rectifier
21931011	ARE0027	Regulator
21932004	ARE4009	Regulator
24041	A4081	Alternator
24171	A0004	Alternator
24206	A4012	Alternator
24214	A4059	Alternator
24215	A4011	Alternator
24217	A4013	Alternator
24217A	A4013	Alternator
24217B	A4013	Alternator
24217E	A4013	Alternator
24217F	A4013	Alternator
24220	A4012	Alternator
24221	A4013	Alternator
24223	A4014	Alternator
24231	A4014	Alternator
24233	A4012	Alternator
24249	A4011	Alternator
24260	A4067	Alternator
24274	A4040	Alternator
24277	A4011	Alternator

LUCAS	AS	PRODUCT
24286	A4015	Alternator
24286F	A4015	Alternator
24293	A4001	Alternator
24298	A4011	Alternator
24299	A4010	Alternator
24329	A4079	Alternator
24330	A4026	Alternator
24344	A4054	Alternator
24406	A4010	Alternator
24520	S4013	Starter
25257	S0046	Starter
25286	S0046	Starter
25701E	S4007	Starter
26133	S4014	Starter
26137	S9045	Starter
26145	S4018	Starter
26147	S9045	Starter
26148	S4011	Starter
26154	S4018	Starter
26167	S4018	Starter
26173	S4014	Starter
26186	S4018	Starter
26189	S9045	Starter
26196	S4011	Starter
26200	S4018	Starter
26211	S4004	Starter
26211A	S4004	Starter
26211D	S4004	Starter
26211E	S4004	Starter
26211H	S4004	Starter
26211L	S4004	Starter
26211M	S4004	Starter
26211N	S4004	Starter
26211T	S9045	Starter
26211U	S9045	Starter
26213	S4004	Starter
26219	S4002	Starter
26219A	S4002	Starter
26219B	S4002	Starter
26220	S4018	Starter
26227	S4004	Starter
26233	S4018	Starter
26252339	SA4005	Starter armature
26252342	SD4003	Drive
26253078	SD4002	Drive
26264	S4018	Starter
26265	S4006	Starter
26271	S4002	Starter
26271B	S4002	Starter
26271H	S4002	Starter
26273	S4001	Starter
26273A	S4001	Starter
26273B	S4001	Starter
26273D	S4001	Starter
26274	S4005	Starter
26274B	S4005	Starter
26274E	S4005	Starter
26274H	S4005	Starter
26278	S4014	Starter
26283	S4011	Starter
26284	S9024	Starter
26284E	S9024	Starter
26291	S4004	Starter
26294	S4013	Starter
26294A	S4013	Starter
26294D	S4013	Starter
26294N	S4013	Starter
26311	S4006	Starter
26312	S4008	Starter
26316	S4004	Starter
26320D	S4005	Starter
26321A	S4009	Starter
26323	S4005	Starter
26323A	S4005	Starter
26329	S4004	Starter
26330	S4004	Starter
26338	S4004	Starter
26338A	S4004	Starter
26338B	S4004	Starter
26338D	S4004	Starter
26338F	S4004	Starter
26339	S4004	Starter
26339A	S9045	Starter
26339B	S9045	Starter
26339D	S9045	Starter
26339H	S9045	Starter
26339K	S9045	Starter
26341	S4006	Starter
26341E	S4006	Starter
26342	S4010	Starter
26344	S4001	Starter
26345	S4005	Starter
26345A	S4005	Starter
26345B	S4005	Starter
26345D	S4005	Starter
26345E	S4005	Starter
26349	S4012	Starter
26351	S4004	Starter
26352	S4004	Starter
26355	S4007	Starter
26355A	S4007	Starter
26355D	S4007	Starter
26355J	S4007	Starter
26355Y	S4007	Starter
26356	S4007	Starter
26357	S4013	Starter
26357B	S4013	Starter
26357D	S4013	Starter
26357H	S4013	Starter
26360	S4006	Starter
26364	S9045	Starter
26365	S4001	Starter
26366	S4005	Starter
26366A	S4005	Starter
26366B	S4005	Starter
26369	S4013	Starter
26369D	S4013	Starter
26375	S4011	Starter
26383	S4011	Starter
26383A	S4011	Starter
26383H	S4011	Starter
26383J	S4011	Starter
26388	S4007	Starter
26388A	S4007	Starter
26388F	S4007	Starter
26391	S4018	Starter
26391A	S4018	Starter
26395	S4004	Starter
26395A	S4004	Starter
26395B	S4004	Starter
26395D	S4004	Starter
26395E	S4004	Starter
26395F	S4004	Starter
26395H	S9045	Starter
26399	S9045	Starter
26407	S4007	Starter
26407D	S4007	Starter
26407E	S4007	Starter
26410	S4005	Starter
26410A	S4005	Starter
26410B	S4005	Starter
26411	S4001	Starter
26412	S4018	Starter
26413	S4002	Starter
26414	S4019	Starter
26414E	S4005	Starter
26416	S4012	Starter
26417	S0067	Starter
26422	S4011	Starter
26430	S4008	Starter
26430A	S4008	Starter
26430D	S4008	Starter
26431	S4006	Starter
26587	S0247	Starter
26600	S0247	Starter
26601	S0247	Starter
26660	S0103	Starter
26678	S0247	Starter
26679	S0247	Starter
26690	S0103	Starter
26693	S0103	Starter
26694	S0103	Starter
26695	S0158	Starter
26813	S5017	Starter
26834	S5017	Starter
26841	S5017	Starter
26845	S5017	Starter
26913	S0069	Starter
26914	S0069	Starter
26925	S9045	Starter
26925155A	S9045	Starter
26925155B	S9045	Starter
26935	S0069	Starter
26941	S0069	Starter
26942	S0069	Starter
26943	S0105	Starter
26945	S0105	Starter
26946	S0105	Starter
27004	S0158	Starter
27005	S0247	Starter
27006	S0247	Starter
27014	S0247	Starter
27034	S0103	Starter
271735	LASX15-16	Sta. Brush set
27401	S4037(MM)R	Starter
27408	S4018	Starter

LUCAS	AS	PRODUCT
27409	S4018	Starter
27413	S4014	Starter
27417	S4011	Starter
27421	S4018	Starter
27425	S4009	Starter
27425B	S4009	Starter
27426	S9045	Starter
27432	S4018	Starter
27460	S4009	Starter
27460A	S4009	Starter
27462	S0170	Starter
27463	S4014	Starter
27469	S4018	Starter
27469A	S4018	Starter
27470	S4018	Starter
27470A	S4018	Starter
27474	S4018	Starter
27478	S4011	Starter
27480	S4018	Starter
27486	S4011	Starter
27488	S4018	Starter
27500	S4004	Starter
27500A	S9045	Starter
27500B	S4004	Starter
27500D	S4004	Starter
27500E	S4004	Starter
27500J	S9045	Starter
27500L	S4004	Starter
27501	S4007	Starter
27501A	S4007	Starter
27501B	S4007	Starter
27501D	S4007	Starter
27501E	S4007	Starter
27501F	S4007	Starter
27501H	S4007	Starter
27501J	S4007	Starter
27502	S4013	Starter
27502B	S4013	Starter
27502E	S4013	Starter
27506	S4013	Starter
27510	S9021	Starter
27510B	S4005	Starter
27510F	S4005	Starter
27511	S4006	Starter
27512	S4010	Starter
27512A	S4010	Starter
27512B	S4010	Starter
27512D	S4010	Starter
27512F	S4010	Starter
27515	S9021	Starter
27515A	S4005	Starter
27515B	S4005	Starter
27515E	S4005	Starter
27518	S4013	Starter
27518B	S4013	Starter
27518E	S4013	Starter
27518F	S4013	Starter
27518H	S4013	Starter
27518J	S4013	Starter
27522	S4001	Starter
27539	S4005	Starter
27539B	S4005	Starter
27539D	S4005	Starter
27540	S4001	Starter
27540A	S4001	Starter
27541	S4019	Starter
27543	S4012	Starter
27546	S4001	Starter
27546A	S4001	Starter
27553	S4008	Starter
27554	S4006	Starter
27554A	S4006	Starter
27565	S4019	Starter
27567	S4007	Starter
27568	S4019	Starter
27569	S4004	Starter
27569A	S4004	Starter
27569B	S4004	Starter
27569E	S4004	Starter
27570	S4013	Starter
27570B	S4013	Starter
27570F	S4013	Starter
27571	S4001	Starter
27572	S9021	Starter
27572A	S4005	Starter
27572B	S4005	Starter
27572D	S4005	Starter
27572E	S4005	Starter
27572F	S4005	Starter
27577	S4007	Starter
27577A	S4007	Starter
27578	S9021	Starter
27580	S4001	Starter
27582	S4001	Starter
27583	S4005	Starter
27583A	S4005	Starter
27583B	S4005	Starter
27583D	S4005	Starter
27583H	S4005	Starter
27583J	S4005	Starter
27584	S4001	Starter
27585	S4013	Starter
27585A	S4013	Starter
27587	S9024	Starter
27588	S4013	Starter
27588A	S4013	Starter
27590	S4019	Starter
27592	S4013	Starter
27593	S4001	Starter
27594	S9021	Starter
27594A	S4005	Starter
27596	S4013	Starter
27598	S4019	Starter
27599	S4019	Starter
27602	S4019	Starter
27606	S9021	Starter
27608	S4019	Starter
27626	S4019	Starter
27626A	S4005	Starter
27627	S4019	Starter
27627B	S4019	Starter
28000	ARE4001	Regulator
28001	ARE4001	Regulator
28002	ARE4002	Regulator
37701	ARE4001	Regulator
37703	ARE4001	Regulator
37705	ARE4001	Regulator
37707	ARE4001	Regulator
37707A	ARE4001	Regulator
458523	S0166	Starter
458556	S0166	Starter
54022053	A4011	Alternator
54022142	A4011	Alternator
54022158	A4012	Alternator
54022160	A4011	Alternator
54022171	A4059	Alternator
54022182	A4011	Alternator
54022187	A4013	Alternator
54022187B	A4013	Alternator
54022187D	A4013	Alternator
54022197	A4012	Alternator
54022198	A4013	Alternator
54022211	A4011	Alternator
54022224	A4014	Alternator
54022226	A4011	Alternator
54022232	A4041	Alternator
54022236	A4012	Alternator
54022243	A4011	Alternator
54022247	A4014	Alternator
54022251	A4013	Alternator
54022275	A4013	Alternator
54022281	A4013	Alternator
54022290	A4041	Alternator
54022312	A4013	Alternator
54022313	A4067	Alternator
54022314	A4041	Alternator
54022314B	A4041	Alternator
54022317	A4013	Alternator
54022330	A4041	Alternator
54022335	A4011	Alternator
54022337	A4040	Alternator
54022337A	A4040	Alternator
54022341	A4011	Alternator
54022353	A4011	Alternator
54022375	A4015	Alternator
54022375B	A4015	Alternator
54022375E	A4015	Alternator
54022375F	A4015	Alternator
54022394	A4001	Alternator
54022396	A4001	Alternator
54022396A	A4002	Alternator
54022402	A4014	Alternator
54022415	A4010	Alternator
54022419	A4012	Alternator
54022443	A4033	Alternator
54022443B	A4033	Alternator
54022449	A4014	Alternator
54022453	A4079	Alternator
54022454	A4026	Alternator
54022454B	A4026	Alternator
54022459	A4032	Alternator
54022468	A4054	Alternator
54022474	A4013	Alternator
54022495	A4001	Alternator
54022498	A4032	Alternator
54022514	A4041	Alternator

LUCAS	AS	PRODUCT
54022518	A4014	Alternator
54022520	A4041	Alternator
54022527	A4033	Alternator
54022537	A4001	Alternator
54022542	A4001	Alternator
54022547	A4001	Alternator
54022549	A4031	Alternator
54022555	A4001	Alternator
54022556	A4001	Alternator
54022557	A4001	Alternator
54022564	A4001	Alternator
54022565	A4001	Alternator
54022568	A4033	Alternator
54022570	A4013	Alternator
54022574	A4080	Alternator
54022575	A4001	Alternator
54022578	A4010	Alternator
54022581	A4067	Alternator
54022582	A4001	Alternator
54022583	A4001	Alternator
54022584	A4013	Alternator
54022585	A4041	Alternator
54022588	A4001	Alternator
54022589	A4014	Alternator
54022595	A4067	Alternator
54022598	A4011	Alternator
54022602	A4041	Alternator
54022603	A4012	Alternator
54022604	A4012	Alternator
54022608	A4015	Alternator
54022608A	A4015	Alternator
54022610	A4001	Alternator
54022611	A4013	Alternator
54022613	A4041	Alternator
54022614	A4013	Alternator
54022615	A4001	Alternator
54022617	A4014	Alternator
54022626	A4067	Alternator
54022652	A4013	Alternator
54022653	A4015	Alternator
54022654	A4015	Alternator
54022654A	A4015	Alternator
54022662	A4015	Alternator
54022664	A4015	Alternator
54022665	A4080	Alternator
54022668	A4011	Alternator
54022689	A4001	Alternator
54022695	A4011	Alternator
54022700	A4014	Alternator
54022708	A4001	Alternator
54022711	A4010	Alternator
54022716	A4013	Alternator
54022740	A4011	Alternator
54022747	A4014	Alternator
54022754	A4014	Alternator
54022803	A4011	Alternator
54048473	ARE4001	Regulator
54048600	ARE4001	Regulator
54160288	ASL9003	Slip ring
54202469	APC4006	Plastic cover
54202906	LAX82	Alt. Brush set
54203890	AS4002	Stator
54205306	AS4003	Stator
54205963	ABR4015	Bracket
54205986	ARE4001	Regulator
54206164	AS4003	Stator
54206177	ARE4001	Regulator
54206343	ABR4009	Bracket
54206448	ARE4001	Regulator
54206467	ARE4001	Regulator
54206469	ABR4009	Bracket
54206470	ABR4009	Bracket
54206506	ABR4015	Bracket
54206507	ABR4015	Bracket
54206516	ABR4008	Bracket
54206517	ABR4008	Bracket
54206600	AR4001	Rotor
54206645	ARE4001	Regulator
54206688	ARE4001	Regulator
54206860	AR4001	Rotor
54207284	ABR4008	Bracket
54207285	ABR4008	Bracket
54207301	ABR4015	Bracket
54207302	ABR4015	Bracket
54207336	ARE4001	Regulator
54207624	ABR4015	Bracket
54208234	ABR4015	Bracket
54208417	ARE4001	Regulator
54208671	AR4004	Rotor
54209332	AR4001	Rotor
54209735	ARE4010	Regulator
54209807	ABR4009	Bracket
54220141	ABR4008	Bracket
54242576	SD4020	Drive
54243590	SA4005	Starter armature
54243592	SA4013	Starter armature
54243783	SD4036	Drive
54244390	SBR4001	Starter bracket
54244938	SD4003	Drive
54246252	SD4038	Drive
54246285	SD4003	Drive
54246340	SD4001	Drive
54246654	SD4003	Drive
54246738	SD4036	Drive
54246739	SD4001	Drive
54246896	SD4036	Drive
54247034	SD4002	Drive
54247036	SD4002	Drive
54247134	SD4002	Drive
54247184	SD4001	Drive
54247187	SD4036	Drive
54247389	SD4037	Drive
54247393	SD4013	Drive
54247397	SD4008	Drive
54249032	SD4038	Drive
54249041	SD4038	Drive
54249043	SD4038	Drive
54255966	SBU9043	Bushing
54256151	SBU9044	Bushing
54257833	SBU9042	Bushing
54259517	LASX36	Sta. Brush set
54262658	SD4038	Drive
54268139	SD4013	Drive
54268140	SD4017	Drive
54268141	SD4002	Drive
54268142	SD4037	Drive
54269554	SA4014	Starter armature
54279043	SD4038	Drive
54290474	SD4035	Drive
54290585	SD4013	Drive
54291911	SD4034	Drive
54292464	SD4022	Drive
54292576	SD4020	Drive
54293375	SG4002	Starter gear
54293575	SG4002	Starter gear
54293830	SG4001	Starter gear
54293976	SBR4001	Starter bracket
54294289	SD4020	Drive
54294338	SD4035	Drive
54294409	SA4002	Starter armature
54294440	SBH4004	S. Brush holder
54294444	SBH4004	S. Brush holder
54294580	SG4003	Starter gear
54294703	SA4016R	Starter armature
54294813	SD4028	Drive
54294922	SD4002	Drive
54295155	SD4002	Drive
54295254	SD4020	Drive
54960402	ATP4001	Terminal plug
581200200100	ARE4006	Regulator
581200220000	ARE4003	Regulator
581200220100	ARE4003	Regulator
581200240000	ARE0001	Regulator
581200280000	ARE4007	Regulator
581200300000	ARE0001	Regulator
60600024	SD4002	Drive
60600038	SD4037	Drive
60600066	SD4003	Drive
60600078	SD4008	Drive
60600911	SB4002	Sta. Brush set
60600953	SB4001	Sta. Brush set
60600961	SB4002	Sta. Brush set
60600983	ATP4001	Terminal plug
60933109	SS4012	Starter solenoid
60933111	SS4017	Starter solenoid
61200564	P4003	Pomp
61240701	SF5005	Starter field coil
63227569	S9045	Starter
66021070	A4036	Alternator
66021126	A4036	Alternator
66021169	A4037	Alternator
66021482	A4036	Alternator
66201016	ABE9005	Bearing
66201017	ABE9020	Bearing
66201370	ABE9002	Bearing
66201555	ARE4001	Regulator
66201570	ARC4002	Rectifier
66921126	A4036	Alternator
76397	SS4017	Starter solenoid
76740	SS4006	Starter solenoid
76753	SS4006	Starter solenoid
76755	SS4005	Starter solenoid
76756	SS4006	Starter solenoid
76763	SS4005	Starter solenoid
76781	SS4006	Starter solenoid
76786	SS4005	Starter solenoid

LUCAS	AS	PRODUCT
76796	SS4005	Starter solenoid
76800	SS4005	Starter solenoid
76803	SS4005	Starter solenoid
76804	SS4007	Starter solenoid
76815	SS4005	Starter solenoid
76816	SS4007	Starter solenoid
76820	SS4005	Starter solenoid
76821	SS4007	Starter solenoid
76823	SS4005	Starter solenoid
76824	SS4005	Starter solenoid
76825	SS4006	Starter solenoid
76826	SS4005	Starter solenoid
76827	SS4005	Starter solenoid
76833	SS4006	Starter solenoid
76834	SS4006	Starter solenoid
76835	SS4006	Starter solenoid
76836	SS4006	Starter solenoid
76837	SS4005	Starter solenoid
76850	SS4005	Starter solenoid
76852	SS4007	Starter solenoid
76854	SS4006	Starter solenoid
76855	SS4005	Starter solenoid
76862	SS4006	Starter solenoid
76864	SS4006	Starter solenoid
76865	SS4006	Starter solenoid
76869	SS4006	Starter solenoid
76881	SS4006	Starter solenoid
76885	SS4005	Starter solenoid
76891	SS4005	Starter solenoid
76892	SS4005	Starter solenoid
76895	SS4007	Starter solenoid
76896	SS4007	Starter solenoid
76897	SS4005	Starter solenoid
76899	SS4007	Starter solenoid
76900	SS4006	Starter solenoid
76902	SS4005	Starter solenoid
76908	SS4007	Starter solenoid
76910	SS4006	Starter solenoid
76911	SS4006	Starter solenoid
76912	SS4006	Starter solenoid
76913	SS4006	Starter solenoid
76928	SS4006	Starter solenoid
76956	SS4006	Starter solenoid
76961	SS4007	Starter solenoid
76996	SS4005	Starter solenoid
77010	SS4006	Starter solenoid
77025	SS4006	Starter solenoid
77032	SS4006	Starter solenoid
77034	SS4005	Starter solenoid
77035	SS4007	Starter solenoid
77052	SS4006	Starter solenoid
77058	SS4005	Starter solenoid
77121	SS4017	Starter solenoid
77122	SS4012	Starter solenoid
77123	SS4017	Starter solenoid
77130	SS4009	Starter solenoid
77131	SS4017	Starter solenoid
77132	SS4017	Starter solenoid
77133	SS4017	Starter solenoid
77134	SS4007	Starter solenoid
77136	SS4013	Starter solenoid
77138	SS4013	Starter solenoid
77139	SS4017	Starter solenoid
77141	SS4017	Starter solenoid
77143	SS4017	Starter solenoid
77154	SS4007	Starter solenoid
77157	SS4007	Starter solenoid
77174	SS4023	Starter solenoid
77177	SS4023	Starter solenoid
77194	SS4023	Starter solenoid
77204	SS4023	Starter solenoid
77208	SS4023	Starter solenoid
77269	SS4009	Starter solenoid
77892	SS4005	Starter solenoid
77899	SS4007	Starter solenoid
83166	ARC4010	Rectifier
83334	ARC4010	Rectifier
83520	ARC4010	Rectifier
83842	ARC4010	Rectifier
83844	ARC4010	Rectifier
84201	ARC4002	Rectifier
84422	ARC4002	Rectifier
84443	ARC4010	Rectifier
84454	ARC4002	Rectifier
84455	ARC4002	Rectifier
84456	ARC4005	Rectifier
84457	ARC4002	Rectifier
84468	ARC4003	Rectifier
84469	ARC4004	Rectifier
84486	ARC4005	Rectifier
84499	ARC4002	Rectifier
84574	ARC4002	Rectifier
84855	ARC4002	Rectifier
84885	ARC4002	Rectifier
84886	ARC4004	Rectifier
84889	ARC4002	Rectifier
84959	ARE4002	Regulator
84976	ARC4006	Rectifier
ASP0004	ASL9003	Slip ring
AVP0001	P4003	Pomp
DAB401	IM0001	Ignition Module
DAB427	IC9004	Ignition Coil
DAB428	IM0002	Ignition Module
DAB703	IM1001	Ignition Module
DAB800	IM4001	Ignition Module
DAB954	IM0003	Ignition Module
LEA0493	A0142	Alternator
LEA0539	A3108	Alternator
LEA0540	A3051	Alternator
LEA0545	A2022	Alternator
LEA0553	A9008	Alternator
LES0017	S9045	Starter
LES0246	S3029	Starter
LRA00152	A4012	Alternator
LRA00190	A4065	Alternator
LRA00199	A0012	Alternator
LRA00251	A2036	Alternator
LRA00285	A3045	Alternator
LRA00304	A3046	Alternator
LRA00348	A2036	Alternator
LRA00376	A4011	Alternator
LRA00386	A0099	Alternator
LRA00397	A3006	Alternator
LRA00445	A3013	Alternator
LRA00459	A4065	Alternator
LRA00474	A0009	Alternator
LRA00489	A5030R	Alternator
LRA00496	A4013	Alternator
LRA00502	A5024	Alternator
LRA00510	A3002	Alternator
LRA00514	A4065	Alternator
LRA00515	A3007	Alternator
LRA00517	A4013	Alternator
LRA00522	A4040	Alternator
LRA00527	A4015	Alternator
LRA00536	A5028	Alternator
LRA00550	A6017	Alternator
LRA00556	A2014	Alternator
LRA00558	A4063	Alternator
LRA00566	A3014	Alternator
LRA00575	A5013	Alternator
LRA00581	A3048	Alternator
LRA00584	A0004	Alternator
LRA00593	A3046	Alternator
LRA00597	A4065	Alternator
LRA00603	A4059	Alternator
LRA00604	A4012	Alternator
LRA00607	A4011	Alternator
LRA00611	A4009	Alternator
LRA00615	A0094	Alternator
LRA00617	A0014	Alternator
LRA00618	A0020	Alternator
LRA00623	A0020	Alternator
LRA00695	A4063	Alternator
LRA00696	A0028	Alternator
LRA00698	A3001	Alternator
LRA00706	A5006	Alternator
LRA00712	A4039	Alternator
LRA00715	A0070	Alternator
LRA00717	A0031	Alternator
LRA00719	A0031	Alternator
LRA00723	A0015	Alternator
LRA00731	A0091	Alternator
LRA00753	A4065	Alternator
LRA00764	A3012	Alternator
LRA00766	A3009	Alternator
LRA00767	A3049	Alternator
LRA00770	A3044	Alternator
LRA00778	A3048	Alternator
LRA00805	A0103	Alternator
LRA00823	A0069	Alternator
LRA00832	A4081	Alternator
LRA00836	A0115	Alternator
LRA00839	A4029	Alternator
LRA00886	A0134	Alternator
LRA00887	A0093	Alternator
LRA00897	A0094	Alternator
LRA00898	A2027	Alternator
LRA00901	A3020	Alternator
LRA00910	A4039	Alternator
LRA00912	A4039	Alternator
LRA00913	A0012	Alternator
LRA00922	A0184	Alternator
LRA00924	A0030	Alternator
LRA00925	A0017	Alternator
LRA00932	A3008	Alternator

LUCAS	AS	PRODUCT
LRA00933	A3014	Alternator
LRA00934	A2027	Alternator
LRA00935	A4010	Alternator
LRA00936	A0203	Alternator
LRA00939	A2020	Alternator
LRA00950	A5028	Alternator
LRA00952	A0104	Alternator
LRA00957	A2024	Alternator
LRA00966	A3004	Alternator
LRA00967	A4014	Alternator
LRA00968	A0115	Alternator
LRA00969	A0055	Alternator
LRA00971	A0097	Alternator
LRA00972	A0108	Alternator
LRA00973	A0001	Alternator
LRA00975	A4030	Alternator
LRA00977	A0001	Alternator
LRA00978	A0087	Alternator
LRA00989	A0069	Alternator
LRA00992	A0098	Alternator
LRA00998	A4059	Alternator
LRA01150	A9016	Alternator
LRA01153	A0182	Alternator
LRA01155	A9011	Alternator
LRA01169	A5029	Alternator
LRA01171	A9012	Alternator
LRA01172	A5034	Alternator
LRA01176	A2036	Alternator
LRA01179	A3042	Alternator
LRA01187	A3047	Alternator
LRA01197	A3046	Alternator
LRA01199	A0013	Alternator
LRA01241	A2028	Alternator
LRA01251	A0109	Alternator
LRA01263	A3012	Alternator
LRA01295	A2012	Alternator
LRA01313	A6021	Alternator
LRA01336	A3011	Alternator
LRA01338	A3026	Alternator
LRA01340	A3046	Alternator
LRA01345	A0212	Alternator
LRA01346	A0084	Alternator
LRA01350	A2014	Alternator
LRA01374	A4033	Alternator
LRA01375	A5014	Alternator
LRA01381	A0105	Alternator
LRA01383	A5012	Alternator
LRA01387	A5011	Alternator
LRA01430	A2026	Alternator
LRA01432	A2034	Alternator
LRA01438	A0111	Alternator
LRA01441	A1008	Alternator
LRA01445	A1007	Alternator
LRA01447	A3057	Alternator
LRA01448	A3021	Alternator
LRA01475	A4001	Alternator
LRA01479	A2033	Alternator
LRA01495	A9010	Alternator
LRA01499	A2002	Alternator
LRA01511	A0112	Alternator
LRA01514	A2004	Alternator
LRA01517	A0129	Alternator
LRA01519	A0079	Alternator
LRA01530	A3006	Alternator
LRA01533	A5008	Alternator
LRA01556	A5001	Alternator
LRA01557	A5001	Alternator
LRA01572	A4007	Alternator
LRA01574	A4060	Alternator
LRA01580	A0177	Alternator
LRA01581	A4016	Alternator
LRA01583	A4057	Alternator
LRA01586	A4024	Alternator
LRA01592	A0051	Alternator
LRA01606	A0173	Alternator
LRA01618	A2025	Alternator
LRA01623	A0172	Alternator
LRA01626	A3003	Alternator
LRA01633	A5021	Alternator
LRA01638	A5020	Alternator
LRA01644	A0157	Alternator
LRA01648	A5003	Alternator
LRA01662	A2035	Alternator
LRA01668	A0135	Alternator
LRA01676	A5010	Alternator
LRA01685	A1009	Alternator
LRA01692	A3043	Alternator
LRA01708	A0128	Alternator
LRA01710	A0040	Alternator
LRA01715	A2009	Alternator
LRA01717	A5025	Alternator
LRA01720	A3066	Alternator
LRA01721	A0161	Alternator
LRA01722	A4065	Alternator
LRA01726	A5019	Alternator
LRA01732	A1005	Alternator
LRA01741	A3031	Alternator
LRA01742	A4025	Alternator
LRA01746	A5017	Alternator
LRA01748	A0174	Alternator
LRA01755	A2008	Alternator
LRA01774	A3089	Alternator
LRA01779	A4049	Alternator
LRA01781	A1006	Alternator
LRA01812	A0036	Alternator
LRA01817	A0060	Alternator
LRA01819	A3083	Alternator
LRA01820	A0038	Alternator
LRA01833	A0187	Alternator
LRA01839	A0155	Alternator
LRA01843	A0054	Alternator
LRA01844	A0003	Alternator
LRA01846	A0061	Alternator
LRA01848	A0178	Alternator
LRA01851	A3082	Alternator
LRA01861	A0035	Alternator
LRA01862	A9001	Alternator
LRA01864	A4053	Alternator
LRA01866	A0041	Alternator
LRA01874	A0140	Alternator
LRA01879	A0169	Alternator
LRA01887	A4043	Alternator
LRA01889	A4075	Alternator
LRA01891	A3073	Alternator
LRA01912	A0125	Alternator
LRA01916	A3036	Alternator
LRA01922	A0149	Alternator
LRA01928	A9021	Alternator
LRA01936	A2015	Alternator
LRA01945	A6028	Alternator
LRA01947	A0205R	Alternator
LRA01948	A0036	Alternator
LRA01951	A6001	Alternator
LRA01952	A0205R	Alternator
LRA01953	A0205R	Alternator
LRA01955	A3072	Alternator
LRA01968	A0050	Alternator
LRA01969	A3054	Alternator
LRA01970	A3087	Alternator
LRA01971	A6033	Alternator
LRA01973	A3077	Alternator
LRA01987	A0045	Alternator
LRA01990	A3037	Alternator
LRA01996	A0143	Alternator
LRA01997	A0056	Alternator
LRA02000	A4061	Alternator
LRA02011	A0059	Alternator
LRA02013	A0032	Alternator
LRA02025	A0052	Alternator
LRA02036	A3090	Alternator
LRA02039	A9006	Alternator
LRA02041	A9032	Alternator
LRA02052	A3038	Alternator
LRA02060	A0158	Alternator
LRA02072	A9007	Alternator
LRA02073	A1016R	Alternator
LRA02075	A5015	Alternator
LRA02076	A3094	Alternator
LRA02077	A4061	Alternator
LRA02079	A5010	Alternator
LRA02083	A4023	Alternator
LRA02085	A3091	Alternator
LRA02086	A0050	Alternator
LRA02088	A4024	Alternator
LRA02097	A0144	Alternator
LRA02100	A3079	Alternator
LRA02104	A9035	Alternator
LRA02105	A4077	Alternator
LRA02106	A0121	Alternator
LRA02107	A0205R	Alternator
LRA02112	A0160	Alternator
LRA02115	A0195	Alternator
LRA02121	A0052	Alternator
LRA02125	A0191	Alternator
LRA02130	A0171	Alternator
LRA02136	A9009	Alternator
LRA02141	A0065	Alternator
LRA02148	A3063	Alternator
LRA02151	A4034	Alternator
LRA02152	A2030	Alternator
LRA02153	A3053	Alternator
LRA02160	A3035	Alternator
LRA02162	A1015R	Alternator
LRA02164	A3056	Alternator
LRA02167	A0226	Starter
LRA02168	A0226	Starter

LUCAS	AS	PRODUCT
LRA02171	A3085R	Alternator
LRA02172	A0228	Alternator
LRA02173	A6006	Alternator
LRA02174	A3052	Alternator
LRA02177	A0075	Alternator
LRA02178	A9017	Alternator
LRA02182	A0049	Alternator
LRA02183	A0068	Alternator
LRA02185	A0209	Alternator
LRA02186	A4034	Alternator
LRA02188	A3065	Alternator
LRA02189	A0224	Alternator
LRA02192	A3110	Alternator
LRA02204	A0071	Alternator
LRA02207	A0033	Alternator
LRA02215	A2023	Alternator
LRA02223	A0146	Alternator
LRA02224	A0146	Alternator
LRA02226	A0142	Alternator
LRA02227	A0049	Alternator
LRA02228	A3074	Alternator
LRA02229	A3067	Alternator
LRA02231	A9018	Alternator
LRA02241	A0047	Alternator
LRA02242	A0047	Alternator
LRA02244	A3054	Alternator
LRA02247	A0199	Alternator
LRA02248	A2029	Alternator
LRA02249	A0208	Alternator
LRA02250	A0201R	Alternator
LRA02251	A0220	Alternator
LRA02253	A3101	Alternator
LRA02254	A3102	Alternator
LRA02256	A0076	Alternator
LRA02261	A3094	Alternator
LRA02263	A0216	Alternator
LRA02266	A4058	Alternator
LRA02289	A0127	Alternator
LRA02291	A0190	Alternator
LRA02292	A0147	Alternator
LRA02293	A0032	Alternator
LRA02294	A0194	Alternator
LRA02295	A0066	Alternator
LRA02297	A6036	Alternator
LRA02298	A6027	Alternator
LRA02300	A0142	Alternator
LRA02301	A3032	Alternator
LRA02303	A3032	Alternator
LRA02309	A5022	Alternator
LRA02311	A5023	Alternator
LRA02313	A4056	Alternator
LRA02315	A0206	Alternator
LRA02316	A6007	Alternator
LRA02317	A6025	Alternator
LRA02319	A3098R	Alternator
LRA02320	A9008	Alternator
LRA02321	A0170	Alternator
LRA02323	A3033	Alternator
LRA02325	A3078	Alternator
LRA02332	A3105	Alternator
LRA02335	A0217	Alternator
LRA02337	A0216	Alternator
LRA02338	A9020	Alternator
LRA02343	A0196	Alternator
LRA02344	A0218	Alternator
LRA02345	A4061	Alternator
LRA02347	A0221	Alternator
LRA02348	A9023	Alternator
LRA02349	A3084R	Alternator
LRA02350	A3068	Alternator
LRA02352	A6035	Alternator
LRA02357	A0180	Alternator
LRA02358	A3097	Alternator
LRA02359	A0154	Alternator
LRA02360	A0039	Alternator
LRA02361	A0181	Alternator
LRA02367	A0167	Alternator
LRA02368	A0165	Alternator
LRA02369	A0164	Alternator
LRA02373	A0228	Alternator
LRA02423	A0102	Alternator
LRA02431	A2013	Alternator
LRA02438	A5007	Alternator
LRA02445	A2010	Alternator
LRA02447	A6016	Alternator
LRA02454	A9024	Alternator
LRA02469	A0025	Alternator
LRA02470	A0008	Alternator
LRA02471	A5005	Alternator
LRA02474	A3059	Alternator
LRA02475	A0029	Alternator
LRA02481	A0021	Alternator
LRA02482	A0088	Alternator
LRA02484	A0101	Alternator
LRA02486	A3018	Alternator
LRA02487	A0022	Alternator
LRA02489	A0023	Alternator
LRA02501	A3059	Alternator
LRA02504	A0011	Alternator
LRA02512	A0175	Alternator
LRA02513	A0073	Alternator
LRA02515	A3030	Alternator
LRA02516	A0136	Alternator
LRA02517	A0136	Alternator
LRA02522	A0034	Alternator
LRA02523	A0034	Alternator
LRA02528	A0034	Alternator
LRA02534	A0120	Alternator
LRA02535	A0074	Alternator
LRA02536	A0072	Alternator
LRA02537	A0053	Alternator
LRA02540	A0166	Alternator
LRA02545	A4058	Alternator
LRA02548	A6034	Alternator
LRA02558	A6025	Alternator
LRA02562	A9020	Alternator
LRA02570	A0053	Alternator
LRA02587	A0086	Alternator
LRA02604	A5006	Alternator
LRA02607	A0092	Alternator
LRA02609	A0028	Alternator
LRA02636	A6017	Alternator
LRA02646	A5027	Alternator
LRA02656	A2004	Alternator
LRA02660	A2031	Alternator
LRA02673	A3026	Alternator
LRA02686	A5036	Alternator
LRA02689	A0005	Alternator
LRA02698	A0089	Alternator
LRA02699	A0051	Alternator
LRA02707	A0119	Alternator
LRA02714	A5008	Alternator
LRA02716	A4001	Alternator
LRA02717	A5004	Alternator
LRA02723	A0095	Alternator
LRA02731	A0082	Alternator
LRA02737	A0117	Alternator
LRA02738	A4001	Alternator
LRA02741	A5017	Alternator
LRA02743	A5016	Alternator
LRA02747	A0130	Alternator
LRA02751	A0044	Alternator
LRA02756	A0046	Alternator
LRA02762	A4013	Alternator
LRA02765	A5033	Alternator
LRA02777	A0100	Alternator
LRA02779	A0007	Alternator
LRA02781	A4041	Alternator
LRA02782	A6023	Alternator
LRA02783	A6013	Alternator
LRA02791	A9019	Alternator
LRA02792	A3055	Alternator
LRA02793	A6037	Alternator
LRA02794	A3102	Alternator
LRA02797	A3104	Alternator
LRA02800	A4058	Alternator
LRA02801	A0123	Alternator
LRA02804	A3055	Alternator
LRA02805	A6015	Alternator
LRA02806	A2022	Alternator
LRA02807	A4042	Alternator
LRA02809	A4073	Alternator
LRA02811	A4049	Alternator
LRA02812	A3069	Alternator
LRA02814	A6010	Alternator
LRA02815	A6018	Alternator
LRA02817	A3078	Alternator
LRA02818	A0213	Alternator
LRA02819	A0213	Alternator
LRA02824	A0225	Alternator
LRA02827	A0222	Alternator
LRA02830	A6039	Alternator
LRA02833	A0124	Alternator
LRA02837	A3034	Alternator
LRA02839	A6011	Alternator
LRA02842	A5024	Alternator
LRA02843	A6038	Alternator
LRA02852	A9012	Alternator
LRA02855	A0038	Alternator
LRA02862	A3071	Alternator
LRA02868	A3093	Alternator
LRA02872	A0165	Alternator
LRA02876	A2022	Alternator
LRA02877	A0063	Alternator
LRA02882	A0193	Alternator
LRA02883	A0062	Alternator

LUCAS	AS	PRODUCT
LRA02884	A0168	Alternator
LRA02889	A0044	Alternator
LRA02890	A0067	Alternator
LRA02891	A3070	Alternator
LRA02893	A3052	Alternator
LRA02901	A0223	Alternator
LRA02907	A6034	Alternator
LRA02908	A0210	Alternator
LRA02910	A9029	Alternator
LRA02911	A6026	Alternator
LRA02912	A6026	Alternator
LRA02913	A9022	Alternator
LRA02920	A0122	Alternator
LRA02922	A0133	Alternator
LRA02933	A9029	Alternator
LRA02935	A0064	Alternator
LRA02940	A0159	Alternator
LRA02941	A6023	Alternator
LRA02946	A4048	Alternator
LRA02951	A9029	Alternator
LRA02977	A0200	Alternator
LRA02999	A9004	Alternator
LRA03005	A0207	Alternator
LRA03006	A4082	Alternator
LRA03007	A4083	Alternator
LRA03010	A4084	Alternator
LRA03020	A0144	Alternator
LRA03029	A3107	Alternator
LRA03033	A0213	Alternator
LRA03038	A2038	Alternator
LRA03045	A0215	Alternator
LRA03047	A6019	Alternator
LRA03062	A4072	Alternator
LRA03063	A0150	Alternator
LRA03072	A4085	Alternator
LRA03073	A9036	Alternator
LRA03075	A5009	Alternator
LRA03081	A0227	Alternator
LRA03082	A4050	Alternator
LRA03090	A0227	Alternator
LRA03195	A6029	Alternator
LRA03196	A6030	Alternator
LRA03204	A0211	Alternator
LRA03237	A0229	Alternator
LRA03250	A3106	Alternator
LRB00100	A0025	Alternator
LRB00101	A0026	Alternator
LRB00102	A0087	Alternator
LRB00104	A0058	Alternator
LRB00106	A0017	Alternator
LRB00122	A4067	Alternator
LRB00126	A0152	Alternator
LRB00127	A4012	Alternator
LRB00128	A4013	Alternator
LRB00129	A0141	Alternator
LRB00130	A2031	Alternator
LRB00133	A4051	Alternator
LRB00135	A0010	Alternator
LRB00136	A0013	Alternator
LRB00137	A0002	Alternator
LRB00138	A0016	Alternator
LRB00139	A0017	Alternator
LRB00140	A3099R	Alternator
LRB00143	A3057	Alternator
LRB00144	A0202	Alternator
LRB00145	A0131	Alternator
LRB00146	A0006	Alternator
LRB00147	A0077	Alternator
LRB00148	A4003	Alternator
LRB00150	A9003	Alternator
LRB00154	A2005	Alternator
LRB00158	A4041	Alternator
LRB00159	A4041	Alternator
LRB00161	A4001	Alternator
LRB00163	A4079	Alternator
LRB00166	A0116	Alternator
LRB00172	A0152	Alternator
LRB00174	A0148	Alternator
LRB00175	A0048	Alternator
LRB00176	A0106	Alternator
LRB00178	A4044	Alternator
LRB00180	A3016	Alternator
LRB00181	A3039	Alternator
LRB00182	A3005	Alternator
LRB00183	A3015	Alternator
LRB00185	A3040	Alternator
LRB00186	A3029	Alternator
LRB00187	A4008	Alternator
LRB00188	A4047	Alternator
LRB00193	A0005	Alternator
LRB00194	A2009	Alternator
LRB00196	A1001	Alternator
LRB00197	A0096	Alternator
LRB00199	A2004	Alternator
LRB00200	A3075	Alternator
LRB00207	A4032	Alternator
LRB00209	A0110	Alternator
LRB00210	A6012	Alternator
LRB00212	A6009	Alternator
LRB00214	A4069	Alternator
LRB00216	A4007	Alternator
LRB00217	A0114	Alternator
LRB00221	A4020	Alternator
LRB00223	A0153	Alternator
LRB00224	A0197	Alternator
LRB00225	A5018	Alternator
LRB00226	A4022	Alternator
LRB00227	A4078	Alternator
LRB00232	A9005	Alternator
LRB00235	A5014	Alternator
LRB00236	A5008	Alternator
LRB00237	A5017	Alternator
LRB00243	A4005	Alternator
LRB00249	A1002	Alternator
LRB00250	A1003	Alternator
LRB00252	A0078	Alternator
LRB00254	A3081	Alternator
LRB00255	A1012	Alternator
LRB00260	A4019	Alternator
LRB00261	A3076	Alternator
LRB00262	A2032	Alternator
LRB00265	A6032	Alternator
LRB00266	A2007	Alternator
LRB00270	A0079	Alternator
LRB00271	A9002	Alternator
LRB00274	A5026	Alternator
LRB00277	A3062	Alternator
LRB00280	A3022	Alternator
LRB00281	A3096	Alternator
LRB00285	A4026	Alternator
LRB00287	A4031	Alternator
LRB00288	A4031	Alternator
LRB00292	A4006	Alternator
LRB00295	A0019	Alternator
LRB00296	A0186	Alternator
LRB00297	A3019	Alternator
LRB00298	A3041	Alternator
LRB00299	A2016	Alternator
LRB00301	A0133	Alternator
LRB00303	A2001	Alternator
LRB00305	A0018	Alternator
LRB00306	A3061	Alternator
LRB00310	A0023	Alternator
LRB00312	A0163	Alternator
LRB00316	A3010	Alternator
LRB00320	A1010	Alternator
LRB00321	A1014	Alternator
LRB00326	A4018	Alternator
LRB00328	A4017	Alternator
LRB00329	A4004	Alternator
LRB00332	A0081	Alternator
LRB00334	A3095	Alternator
LRB00341	A2014	Alternator
LRB00347	A9015	Alternator
LRB00348	A9015	Alternator
LRB00353	A0156	Alternator
LRB00357	A4035	Alternator
LRB00358	A4028	Alternator
LRB00359	A4021	Alternator
LRB00363	A0117	Alternator
LRB00370	A4064	Alternator
LRB00373	A3064	Alternator
LRB00378	A0033	Alternator
LRB00381	A5002	Alternator
LRB00384	A4055	Alternator
LRB00385	A0118	Alternator
LRB00387	A0080	Alternator
LRB00392	A0157	Alternator
LRB00393	A0071	Alternator
LRB00395	A3024	Alternator
LRB00400	A3028	Alternator
LRB00401	A3079	Alternator
LRB00406	A1009	Alternator
LRB00413	A5036	Alternator
LRB00415	A5026	Alternator
LRB00418	A4023	Alternator
LRB00420	A3111	Alternator
LRB00423	A4027	Alternator
LRB00425	A4023	Alternator
LRB00426	A0151	Alternator
LRB00427	A0161	Alternator
LRB00429	A0113	Alternator
LRB00431	A9004	Alternator
LRB00433	A1004	Alternator
LRB00435	A4054	Alternator
LRB00437	A3017	Alternator

LUCAS	AS	PRODUCT
LRB00438	A3023	Alternator
LRB00442	A6024	Alternator
LRB00443	A0043	Alternator
LRB00444	A0068	Alternator
LRB00446	A2011	Alternator
LRB00447	A4052	Alternator
LRB00448	A4076	Alternator
LRB00451	A3027	Alternator
LRB00452	A3051	Alternator
LRB00453	A0197	Alternator
LRB00454	A5033	Alternator
LRB00455	A4046	Alternator
LRB00456	A4045	Alternator
LRB00458	A3058	Alternator
LRB00459	A2006	Alternator
LRB00460	A0044	Alternator
LRB00462	A3089	Alternator
LRB00463	A3092	Alternator
LRB00467	A0057	Alternator
LRB00468	A6002	Alternator
LRB00474	A0127	Alternator
LRB00475	A0059	Alternator
LRB00480	A0188	Alternator
LRB00481	A0042	Alternator
LRB00486	A0027	Alternator
LRB00487	A2003	Alternator
LRB00488	A4079	Alternator
LRB00489	A4080	Alternator
LRB00493	A0162	Alternator
LRB00497	A9011	Alternator
LRB00499	A2029	Alternator
LRB00501	A2021	Alternator
LRB00502	A3032	Alternator
LRB00504	A0145	Alternator
LRB00507	A3073	Alternator
LRB00510	A6003	Alternator
LRB00511	A9034	Alternator
LRB00512	A0189	Alternator
LRB00515	A1011	Alternator
LRB00518	A0046	Alternator
LRS00107	S4006	Starter
LRS00113	S4004	Starter
LRS00115	S4004	Starter
LRS00124	S4011	Starter
LRS00129	S4004	Starter
LRS00133	S0046	Starter
LRS00147	S4010	Starter
LRS00151	S4004	Starter
LRS00157	S4014	Starter
LRS00163	S0161	Starter
LRS00173	S9021	Starter
LRS00182	S0116	Starter
LRS00185	S0087	Starter
LRS00190	S4018	Starter
LRS00192	S4033	Starter
LRS00195	S4013	Starter
LRS00212	S4004	Starter
LRS00215	S4002	Starter
LRS00232	S4005	Starter
LRS00234	S4033	Starter
LRS00286	S0128	Starter
LRS00301	S4001	Starter
LRS00302	S4012	Starter
LRS00304	S4007	Starter
LRS00356	S1013	Starter
LRS00375	S4006	Starter
LRS00383	S0183	Starter
LRS00396	S5025	Starter
LRS00419	S0038	Starter
LRS00435	S0067	Starter
LRS00439	S5005	Starter
LRS00451	S4033	Starter
LRS00453	S3014	Starter
LRS00456	S9057	Starter
LRS00459	S0004	Starter
LRS00463	S3014	Starter
LRS00473	S5002	Starter
LRS00476	S0084	Starter
LRS00478	S0217	Starter
LRS00484	S4008	Starter
LRS00491	S6018	Starter
LRS00503	S3015	Starter
LRS00505	S3015	Starter
LRS00515	S5002	Starter
LRS00516	S5002	Starter
LRS00521	S0050	Starter
LRS00522	S0015	Starter
LRS00528	S0045	Starter
LRS00531	S0183	Starter
LRS00544	S0247	Starter
LRS00557	S5012	Starter
LRS00558	S0072	Starter
LRS00559	S0077	Starter
LRS00560	S0072	Starter
LRS00565	S0117	Starter
LRS00568	S9043	Starter
LRS00570	S9046	Starter
LRS00574	S4009	Starter
LRS00578	S0069	Starter
LRS00591	S0204	Starter
LRS00592	S3005	Starter
LRS00605	S5016	Starter
LRS00607	S6009	Starter
LRS00609	S6013	Starter
LRS00611	S0016	Starter
LRS00614	S4039	Starter
LRS00615	S6004	Starter
LRS00617	S5006	Starter
LRS00620	S4006	Starter
LRS00624	S5014	Starter
LRS00625	S6002	Starter
LRS00626	S6002	Starter
LRS00627	S5012	Starter
LRS00632	S9043	Starter
LRS00633	S0075	Starter
LRS00639	S9043	Starter
LRS00640	S3047	Starter
LRS00641	S3047	Starter
LRS00648	S0050	Starter
LRS00650	S0236	Starter
LRS00656	S0029	Starter
LRS00657	S0217	Starter
LRS00661	S0043	Starter
LRS00662	S0014	Starter
LRS00663	S0132	Starter
LRS00664	S0133	Starter
LRS00671	S3032	Starter
LRS00673	S4007	Starter
LRS00675	S0247	Starter
LRS00683	S0034	Starter
LRS00684	S5020	Starter
LRS00688	S5012	Starter
LRS00708	S0103	Starter
LRS00710	S5017	Starter
LRS00714	S9008	Starter
LRS00725	S2015	Starter
LRS00727	S2005	Starter
LRS00728	S0042	Starter
LRS00729	S0055	Starter
LRS00731	S0083	Starter
LRS00733	S0069	Starter
LRS00735	S3001	Starter
LRS00737	S3010	Starter
LRS00741	S6001	Starter
LRS00744	S0144	Starter
LRS00746	S0220(BOSCH)R	Starter
LRS00747	S0041	Starter
LRS00748	S0011	Starter
LRS00749	S3009	Starter
LRS00750	S0044	Starter
LRS00751	S3002	Starter
LRS00755	S0158	Starter
LRS00756	S0247	Starter
LRS00757	S0247	Starter
LRS00762	S0115	Starter
LRS00763	S9054	Starter
LRS00764	S0065	Starter
LRS00765	S0040	Starter
LRS00766	S0023	Starter
LRS00778	S0008	Starter
LRS00783	S0039	Starter
LRS00785	S0062	Starter
LRS00790	S0077	Starter
LRS00791	S0033	Starter
LRS00792	S3031	Starter
LRS00793	S2017	Starter
LRS00799	S0022	Starter
LRS00817	S0151	Starter
LRS00818	S0002	Starter
LRS00819	S0003	Starter
LRS00824	S0151	Starter
LRS00825	S0003	Starter
LRS00828	S0148	Starter
LRS00837	S0118	Starter
LRS00838	S0111	Starter
LRS00839	S4021	Starter
LRS00841	S0092	Starter
LRS00843	S0151	Starter
LRS00847	S0116	Starter
LRS00849	S2002	Starter
LRS00850	S0152	Starter
LRS00860	S0007	Starter
LRS00878	S0010	Starter
LRS00883	S0063	Starter
LRS00884	S5020	Starter
LRS00890	S0187	Starter

LUCAS	AS	PRODUCT
LRS00891	S4016	Starter
LRS00892	S0104	Starter
LRS00893	S0142	Starter
LRS00896	S5046	Starter
LRS00898	S1014	Starter
LRS00899	S0103	Starter
LRS00920	S0219(BOSCH)R	Starter
LRS00921	S0115	Starter
LRS00922	S0001	Starter
LRS00923	S0068	Starter
LRS00925	S0107	Starter
LRS00930	S0197	Starter
LRS00932	S0114	Starter
LRS00940	S0110	Starter
LRS00946	S4023	Starter
LRS00959	S0162	Starter
LRS00960	S0145	Starter
LRS00962	S0235	Starter
LRS00963	S0052	Starter
LRS00966	S0006	Starter
LRS00967	S5018	Starter
LRS00968	S4013	Starter
LRS00969	S4019	Starter
LRS00971	S0030	Starter
LRS00972	S0166	Starter
LRS00973	S2015	Starter
LRS00974	S2004	Starter
LRS00976	S9001	Starter
LRS00977	S0025	Starter
LRS00986	S0221(BOSCH)R	Starter
LRS00987	S0174	Starter
LRS00989	S4022	Starter
LRS00990	S0054	Starter
LRS00991	S0047	Starter
LRS00992	S0124	Starter
LRS00993	S9031	Starter
LRS00994	S0056	Starter
LRS00995	S6020	Starter
LRS00997	S3004	Starter
LRS00999	S3011	Starter
LRS01053	S0113	Starter
LRS01075	S0198	Starter
LRS01089	S0112	Starter
LRS01102	S5024	Starter
LRS01103	S0110	Starter
LRS01113	S6002	Starter
LRS01119	S5010	Starter
LRS01150	S5012	Starter
LRS01170	S2007	Starter
LRS01190	S3045	Starter
LRS01195	S0031	Starter
LRS01198	S2006	Starter
LRS01220	S2017	Starter
LRS01223	S3050	Starter
LRS01232	S0146	Starter
LRS01250	S3042	Starter
LRS01253	S5023	Starter
LRS01256	S6003	Starter
LRS01264	S1012	Starter
LRS01275	S1003	Starter
LRS01291	S0051	Starter
LRS01304	S3052	Starter
LRS01306	S5037	Starter
LRS01323	S0058	Starter
LRS01328	S5007	Starter
LRS01330	S0211	Starter
LRS01337	S5021	Starter
LRS01343	S2009	Starter
LRS01363	S6019	Starter
LRS01370	S2018	Starter
LRS01382	S0093	Starter
LRS01389	S0049	Starter
LRS01398	S1002	Starter
LRS01401	S1005	Starter
LRS01414	S6011	Starter
LRS01419	S1004	Starter
LRS01422	S0066	Starter
LRS01430	S6016	Starter
LRS01431	S4027	Starter
LRS01435	S9009	Starter
LRS01436	S5026	Starter
LRS01446	S3063	Starter
LRS01448	S0240	Starter
LRS01460	S5033	Starter
LRS01462	S0146	Starter
LRS01468	S5004	Starter
LRS01471	S0099	Starter
LRS01475	S4035	Starter
LRS01492	S5043	Starter
LRS01499	S0091	Starter
LRS01507	S9004	Starter
LRS01509	S0168	Starter
LRS01518	S0095	Starter
LRS01519	S0169	Starter
LRS01522	S5021	Starter
LRS01525	S6016	Starter
LRS01533	S9003	Starter
LRS01540	S0192	Starter
LRS01545	S0223(BOSCH)	Starter
LRS01551	S6012	Starter
LRS01552	S0136	Starter
LRS01559	S3052	Starter
LRS01562	S0081	Starter
LRS01564	S0212	Starter
LRS01566	S3008	Starter
LRS01567	S6024	Starter
LRS01568	S2019	Starter
LRS01569	S3016	Starter
LRS01571	S3058R	Starter
LRS01578	S4028	Starter
LRS01579	S3002	Starter
LRS01581	S0017	Starter
LRS01586	S4028	Starter
LRS01590	S3060	Starter
LRS01592	S0089	Starter
LRS01593	S5038	Starter
LRS01596	S3052	Starter
LRS01603	S0129	Starter
LRS01605	S0234	Starter
LRS01623	S6008	Starter
LRS01627	S9032	Starter
LRS01632	S0225	Starter
LRS01635	S3051	Starter
LRS01638	S0155	Starter
LRS01640	S5044	Starter
LRS01646	S1010	Starter
LRS01647	S9011	Starter
LRS01651	S3051	Starter
LRS01652	S2010	Starter
LRS01666	S0186R	Starter
LRS01667	S5032	Starter
LRS01673	S0090	Starter
LRS01674	S0243	Starter
LRS01675	S3044	Starter
LRS01676	S3055	Starter
LRS01695	S5026	Starter
LRS01698	S0231	Starter
LRS01700	S0185	Starter
LRS01701	S0227	Starter
LRS01702	S3059	Starter
LRS01703	S0231	Starter
LRS01705	S0203	Starter
LRS01706	S0214	Starter
LRS01708	S0035	Starter
LRS01710	S0153	Starter
LRS01712	S3062	Starter
LRS01714	S5045	Starter
LRS01715	S5036	Starter
LRS01716	S5050	Starter
LRS01717	S9020	Starter
LRS01723	S5012	Starter
LRS01724	S0226	Starter
LRS01726	S4025	Starter
LRS01729	S3064	Starter
LRS01732	S3039	Starter
LRS01735	S3043	Starter
LRS01737	S3029	Starter
LRS01738	S3028	Starter
LRS01755	S0101	Starter
LRS01777	S0233	Starter
LRS01780	S0057	Starter
LRS01789	S1010	Starter
LRS01791	S4031	Starter
LRS01794	S1008	Starter
LRS01800	S1008	Starter
LRS01834	S2003	Starter
LRS01842	S5003	Starter
LRS01843	S5008	Starter
LRS01848	S5052	Starter
LRS01854	S1006	Starter
LRS01855	S0009	Starter
LRS01859	S0134	Starter
LRS01872	S6027	Starter
LRS01878	S9005	Starter
LRS01881	S6010	Starter
LRS01891	S0021	Starter
LRS01893	S6026	Starter
LRS01896	S0160	Starter
LRS01897	S0024	Starter
LRS01902	S3046	Starter
LRS01903	S0097	Starter
LRS01906	S0012	Starter
LRS01907	S0019	Starter
LRS01909	S5051	Starter
LRS01915	S1001	Starter
LRS01917	S0170	Starter

LUCAS	AS	PRODUCT
LRS01925	S5011	Starter
LRS01929	S0109	Starter
LRS01930	S0135	Starter
LRS01935	S3034	Starter
LRS01936	S0079	Starter
LRS01938	S0076	Starter
LRS01939	S0108	Starter
LRS01941	S5013	Starter
LRS01942	S0080	Starter
LRS01943	S0078	Starter
LRS01946	S1009	Starter
LRS01947	S0130	Starter
LRS01948	S3048	Starter
LRS01950	S5055	Starter
LRS01954	S0075	Starter
LRS01957	S6023	Starter
LRS01958	S6005	Starter
LRS01959	S0061	Starter
LRS01961	S0074	Starter
LRS01964	S0093	Starter
LRS01965	S6032	Starter
LRS01968	S5035	Starter
LRS01972	S0085	Starter
LRS01975	S0156	Starter
LRS01978	S0115	Starter
LRS01985	S9046	Starter
LRS02000	S1013	Starter
LRS02008	S0043	Starter
LRS02028	S0029	Starter
LRS02033	S0131	Starter
LRS02046	S5017	Starter
LRS02052	S2011	Starter
LRS02055	S5012	Starter
LRS02064	S0143	Starter
LRS02071	S0241	Starter
LRS02072	S5023	Starter
LRS02078	S0126	Starter
LRS02080	S3022	Starter
LRS02084	S0098	Starter
LRS02090	S0004	Starter
LRS02091	S3040	Starter
LRS02095	S4022	Starter
LRS02099	S0020	Starter
LRS02100	S3002	Starter
LRS02104	S4022	Starter
LRS02106	S3032	Starter
LRS02108	S3001	Starter
LRS02109	S0059	Starter
LRS02112	S0163	Starter
LRS02114	S5002	Starter
LRS02115	S0088	Starter
LRS02116	S4016	Starter
LRS02117	S9019	Starter
LRS02132	S0190R	Starter
LRS02136	S0055	Starter
LRS02149	S0216	Starter
LRS02157	S0070	Starter
LRS02158	S0037	Starter
LRS02164	S6028	Starter
LRS02166	S5031	Starter
LRS02168	S0100	Starter
LRS02170	S9025	Starter
LRS02171	S9033	Starter
LRS02172	S9034	Starter
LRS02173	S5042	Starter
LRS02174	S3037	Starter
LRS02175	S0107	Starter
LRS02178	S0216	Starter
LRS02180	S0082	Starter
LRS02188	S6031	Starter
LRS02193	S6032	Starter
LRS02194	S0177	Starter
LRS02195	S0120	Starter
LRS02197	S0171	Starter
LRS02198	S0140	Starter
LRS02205	S0073	Starter
LRS02206	S4029	Starter
LRS02213	S0098	Starter
LRS02217	S6021	Starter
LRS02218	S5004	Starter
LRS02219	S9036	Starter
LRS02223	S0139	Starter
LRS02224	S0228	Starter
LRS02227	S0071	Starter
LRS02230	S5056	Starter
LRS02243	S0123	Starter
LRS02252	S3017	Starter
LRS02261	S6029	Starter
LRS02263	S9033	Starter
LRS02273	S0173	Starter
LRS02275	S3057	Starter
LRS02283	S0186R	Starter
LRS02289	S9030	Starter
LRS02292	S9032	Starter
LRS02295	S3012	Starter
LRS02298	S0242	Starter
LRS02299	S0244	Starter
LRS02302	S0232	Starter
LRS02303	S3062	Starter
LRS02304	S3061	Starter
LRS02310	S5053	Starter
LRS02317	S9062	Starter
LRS02318	S0159	Starter
LRS02326	S0191	Starter
LRS02330	S0213	Starter
LRS02341	S0194	Starter
LRS02377	S0218	Starter
LRS02387	S9063	Starter
LRS02402	S0237	Starter
LRS02415	S0238	Starter
LRS02416	S5049	Starter
LRS03431	S0215	Starter
LRT00100	S5019	Starter
LRT00101	S3013	Starter
LRT00103	S5015	Starter
LRT00104	S0165	Starter
LRT00107	S0098	Starter
LRT00108	S0017	Starter
LRT00110	S9010	Starter
LRT00114	S6022	Starter
LRT00116	S0059	Starter
LRT00117	S9015	Starter
LRT00119	S0073	Starter
LRT00121	S0126	Starter
LRT00124	S3001	Starter
LRT00125	S0239	Starter
LRT00128	S3054	Starter
LRT00131	S2002	Starter
LRT00132	S0064	Starter
LRT00133	S0005	Starter
LRT00134	S0026	Starter
LRT00135	S0196	Starter
LRT00136	S0111	Starter
LRT00137	S0002	Starter
LRT00138	S0018	Starter
LRT00139	S0036	Starter
LRT00143	S3007	Starter
LRT00146	S4015	Starter
LRT00147	S4020	Starter
LRT00150	S0105	Starter
LRT00154	S4034	Starter
LRT00159	S0034	Starter
LRT00163	S0161	Starter
LRT00165	S0157	Starter
LRT00167	S0096	Starter
LRT00169	S0106	Starter
LRT00171	S6007	Starter
LRT00172	S0094	Starter
LRT00174	S3030	Starter
LRT00175	S0088	Starter
LRT00176	S4007	Starter
LRT00177	S0027	Starter
LRT00178	S0048	Starter
LRT00179	S0025	Starter
LRT00182	S0020	Starter
LRT00187	S5009	Starter
LRT00188	S4017	Starter
LRT00189	S6016	Starter
LRT00190	S0098	Starter
LRT00191	S3003	Starter
LRT00194	S3004	Starter
LRT00195	S0166	Starter
LRT00196	S0206	Starter
LRT00197	S3019	Starter
LRT00198	S4022	Starter
LRT00199	S0195	Starter
LRT00200	S0246	Starter
LRT00202	S9002	Starter
LRT00203	S3053	Starter
LRT00205	S3020	Starter
LRT00206	S3036	Starter
LRT00207	S0103	Starter
LRT00214	S6014	Starter
LRT00217	S0176	Starter
LRT00218	S0248	Starter
LRT00219	S0125	Starter
LRT00220	S0032	Starter
LRT00221	S0224	Starter
LRT00222	S2010	Starter
LRT00223	S0141	Starter
LRT00224	S2001	Starter
LRT00225	S0037	Starter
LRT00229	S0028	Starter
LRT00231	S0161	Starter
LRT00235	S0225	Starter
LRT00236	S3021	Starter

LUCAS	AS	PRODUCT
LRT00237	S3008	Starter
LRT00240	S3024	Starter
LRT00242	S0119	Starter
LRT00244	S0168	Starter
LRT00251	S0154	Starter
LTH107	SA5009	Starter armature
LTH207	SA5004	Starter armature
LTH212	SF5005	Starter field coil
LTH213	SBH5006	S. Brush holder
NAB900	A4036	Alternator
NAB900M	A4066	Alternator
NAB901	A4037	Alternator
NCB218	ARE3004	Regulator
NCJ400	ARE6016	Regulator
NCJ408	ARE6016	Regulator
NSB520	S9045	Starter
NSB529	S9051	Starter
RTF151A	ARE4004	Regulator
SAAR6000	SA5009	Starter armature
SAAR6001	SA5004	Starter armature
SAR0002	SA4005	Starter armature
SAR0003	SA4013	Starter armature
SAR0015	SA4014	Starter armature
SSL0001	SS4005	Starter solenoid
SSL0002	SS4007	Starter solenoid
SSL0005	SS4017	Starter solenoid
SSL0006	SS4012	Starter solenoid
SSL0007	SS4009	Starter solenoid
SSL0008	SS4007	Starter solenoid
SSL0009	SS4013	Starter solenoid
SSL0013	SS4006	Starter solenoid
SSP0036	SF5005	Starter field coil
SSP6000	SBH5007	S. Brush holder
SSP6001	SBH5006	S. Brush holder
TAB118	LASX36	Sta. Brush set
TAB125	LASX15-16	Sta. Brush set
TAB136	SB4003	Sta. Brush set
TAJ100	SB2001	Sta. Brush set
TAJ101	SB2002	Sta. Brush set
TAJ102	SB2013	Sta. Brush set
TAJ106	SB2003	Sta. Brush set
TAJ203	SB5007	Sta. Brush set
TAJ209	SB5001	Sta. Brush set
TAJ403	SB6001	Sta. Brush set
TAJ405	SB6004	Sta. Brush set
TAJ407	SB6006	Sta. Brush set
TAJ409	SB6002	Sta. Brush set
TAJ410	SB6001	Sta. Brush set
TJB103	SA4005	Starter armature
TJB104	SA4013	Starter armature
TJB115	SA4014	Starter armature
TMB100	SD4003	Drive
TMB115	SD4036	Drive
TMB116	SD4001	Drive
TMB120	SD4002	Drive
TMB121	SD4037	Drive
TMB125	SD4008	Drive
TMB148	SD4013	Drive
TMB167	SD4034	Drive
TMB170	SD4013	Drive
TMB189	SD4020	Drive
TMB196	SD4022	Drive
TMJ102	SD2017	Drive
TMJ103	SD2018	Drive
TMJ107	SD2018	Drive
TMJ115	SD2002	Drive
TMJ117	SD2002	Drive
TMJ120	SD2006	Drive
TMJ121	SD2003	Drive
TMJ123	SD2002	Drive
TMJ171	SD2004	Drive
TMJ204	SD5001	Drive
TMJ210	SD5002	Drive
TMJ401	SD6001	Drive
TMJ402	SD6002	Drive
TMJ410	SD6002	Drive
TNB108	SD4002	Drive
TNB142	SD4038	Drive
TNB147	SD4038	Drive
TNB149	SD4038	Drive
TNB165	SD4002	Drive
TNB167	SD4017	Drive
TNB169	SD4037	Drive
TNB173	SD4035	Drive
TOB100	SS4005	Starter solenoid
TOB108	SS4006	Starter solenoid
TOB109	SS4005	Starter solenoid
TOB110	SS4006	Starter solenoid
TOB111	SS4006	Starter solenoid
TOB113	SS4007	Starter solenoid
TOB121	SS4007	Starter solenoid
TOB129	SS4006	Starter solenoid
TOB133	SS4006	Starter solenoid
TOB134	SS4007	Starter solenoid
TOB162	SS4005	Starter solenoid
TOB174	SS4005	Starter solenoid
TOB179	SS4006	Starter solenoid
TOB184	SS4006	Starter solenoid
TOJ101	SS2001	Starter solenoid
TOJ104	SS2002	Starter solenoid
TOJ214	SS5033	Starter solenoid
TOJ400	SS6001	Starter solenoid
TOJ401	SS6002	Starter solenoid
TPB104	SS4017	Starter solenoid
TPB107	SS4007	Starter solenoid
TPB110	SS4009	Starter solenoid
TPB111	SS4017	Starter solenoid
TPB114	SS4013	Starter solenoid
TPB115	SS4013	Starter solenoid
TPB116	SS4017	Starter solenoid
TPB118	SS4017	Starter solenoid
TPB119	SS4017	Starter solenoid
TPB124	SS4012	Starter solenoid
TPB140	SS4023	Starter solenoid
TPB146	SS4023	Starter solenoid
UAB100	ASL9003	Slip ring
UAB101	ASL9003	Slip ring
UAB104	ARE3011	Regulator
UBB109	ARC4010	Rectifier
UBB110	ARC4010	Rectifier
UBB133	ARC4002	Rectifier
UBB135	ARC4002	Rectifier
UBB136	ARC4003	Rectifier
UBB137	ARC4004	Rectifier
UBB138	ARC4002	Rectifier
UBB140	ARC4005	Rectifier
UBB141	ARC4002	Rectifier
UBB143	ARC4002	Rectifier
UBB144	ARC4002	Rectifier
UBB215	ARC3005	Rectifier
UBB232	ARC3001	Rectifier
UBB233	ARC3002	Rectifier
UBB234	ARC3008	Rectifier
UBB235	ARC3007	Rectifier
UBB236	ARC3026	Rectifier
UBB237	ARC3004	Rectifier
UBB238	ARC3017	Rectifier
UBB240	ARC3003	Rectifier
UBB242	ARC3027	Rectifier
UBB243	ARC3019	Rectifier
UBB244	ARC3010	Rectifier
UBB250	ARC3011	Rectifier
UBB251	ARC3011	Rectifier
UBB252	ARC3012	Rectifier
UBB253	ARC3011	Rectifier
UBB254	ARC3035	Rectifier
UBB255	ARC3007	Rectifier
UBB256	ARC3022	Rectifier
UBB411	ARC0003	Rectifier
UBB414	ARC0045	Rectifier
UBB415	ARC0004	Rectifier
UBB417	ARC0002	Rectifier
UBB418	ARC0006	Rectifier
UBB423	ARC0011	Rectifier
UBB424	ARC0012	Rectifier
UBB429	ARC0062	Rectifier
UBB430	ARC0009	Rectifier
UBB502	ARC3020	Rectifier
UBB703	ARC1025	Rectifier
UBB806	ARC4023	Rectifier
UBB812	ARC4008	Rectifier
UBB813	ARC4009	Rectifier
UBJ100	ARC2007	Rectifier
UBJ103	ARC2002	Rectifier
UBJ104	ARC2004	Rectifier
UBJ106	ARC2001	Rectifier
UBJ108	ARC2013	Rectifier
UBJ119	ARC2005	Rectifier
UBJ165	ARC2006	Rectifier
UBJ169	ARC2011	Rectifier
UBJ200	ARC5002	Rectifier
UBJ201	ARC5011	Rectifier
UBJ219	ARC5020	Rectifier
UBJ256	ARC5016	Rectifier
UBJ257	ARC5017	Rectifier
UBJ302	ARC5025	Rectifier
UCB148	ARE4001	Regulator
UCB148X	ARE4001	Regulator
UCB150	ARE4001	Regulator
UCB151	ARE4001	Regulator
UCB152	ARE4001	Regulator
UCB155	ARE4002	Regulator
UCB206	ARE3018	Regulator
UCB207	ARE3018	Regulator
UCB218	ARE3004	Regulator
UCB220	ARE3003	Regulator

LUCAS	AS	PRODUCT
UCB223	ARE3004	Regulator
UCB237	ARE3048	Regulator
UCB239	ARE3013	Regulator
UCB245	ARE3002	Regulator
UCB246	ARE3014	Regulator
UCB400	ARE0001	Regulator
UCB402	ARE0015	Regulator
UCB403	ARE0002	Regulator
UCB404	ARE0027	Regulator
UCB406	ARE0037	Regulator
UCB407	ARE0031	Regulator
UCB409	ARE0002	Regulator
UCB412	ARE6001	Regulator
UCB413	ARE0004	Regulator
UCB414	ARE0032	Regulator
UCB500	ARE3017	Regulator
UCB506	ARE3001	Regulator
UCB517	ARE3022	Regulator
UCB518	ARE3009	Regulator
UCB519	ARE3005	Regulator
UCB520	ARE3021	Regulator
UCB521	ARE3006	Regulator
UCB701	ARE1001	Regulator
UCB703	ARE1010	Regulator
UCB705	ARE1009	Regulator
UCB802	ARE4009	Regulator
UCB805	ARE4009	Regulator
UCB806	ARE4006	Regulator
UCB808	ARE4003	Regulator
UCB812	ARE4010	Regulator
UCB902	ARE9001	Regulator
UCJ101	ARE2002	Regulator
UCJ113	ARE2007	Regulator
UCJ120	ARE2028	Regulator
UCJ126	ARE2012	Regulator
UCJ200	ARE5001	Regulator
UCJ207	ARE5032	Regulator
UCJ216	ARE5002	Regulator
UCJ233	ARE5026	Regulator
UCJ235	ARE5005	Regulator
UCJ247	ARE5014	Regulator
UCJ400	ARE6028	Regulator
UCJ412	ARE6001	Regulator
UCJ423	ARE6008	Regulator
UCJ424	ARE6006	Regulator
UEB104	AR4001	Rotor
UIB 101	AS4003	Stator
UIB103	AS4003	Stator
ULB400	BX182	Alt. Brush set
ULB408	BX202	Alt. Brush set
ULB428	BX185	Alt. Brush set
ULB429	BX204	Alt. Brush set
ULB700	ABH1001	A. Brush holder
ULB701	ABH1002	A. Brush holder
ULB811	ABH4002	A. Brush holder
ULB813	ABH4001	A. Brush holder
ULB814	ABH4002	A. Brush holder
ULJ111	AB2005	Alt. Brush set
ULJ116	AB2005	Alt. Brush set
ULJ120	AB2005	Alt. Brush set
ULJ167	AB2001	Alt. Brush set
ULJ202	AB5002	Alt. Brush set
ULJ204	AB5003	Alt. Brush set
ULJ208	AB5005	Alt. Brush set
ULJ400	AB6001	Alt. Brush set
ULJ403	AB6002	Alt. Brush set
ULJ404	AB6003	Alt. Brush set
ULJ428	BX185	Alt. Brush set
ULJ436	AB6005	Alt. Brush set
ULJ441	AB6005	Alt. Brush set
UMB118	ABE9004	Bearing
UMB120	ABE9019	Bearing
UMB122	ABE9001	Bearing
UMB123	ABE9002	Bearing
UMB125	ABE9007	Bearing
UMB127	ABE9006	Bearing
UTB101	ABE9005	Bearing
UXB940	P4003	Pomp
UZB202	ARC4001	Rectifier
UZB700	ARC1001	Rectifier
UZB940	P4003	Pomp

LUK	AS	PRODUCT
5350001000	AFP0005	FW pulley
535000110	AFP0005	FW pulley
5350002000	AFP0002	FW pulley
535000210	AFP0002	FW pulley
5350003000	AFP0003	FW pulley
535000310	AFP0003	FW pulley
5350004000	AFP0006	FW pulley
535000410	AFP0006	FW pulley
5350005000	AFP0009	FW pulley
535000510	AFP0009	FW pulley
5350006000	AFP0040	FW pulley
535000610	AFP0040	FW pulley
5350007000	AFP0019	FW pulley
535000710	AFP0019	FW pulley
5350008000	AFP0011	FW pulley
535000810	AFP0011	FW pulley
5350009000	AFP0001	FW pulley
535000910	AFP0001	FW pulley
5350010000	AFP0004	FW pulley
535001010	AFP0004	FW pulley
5350011000	AFP3001	FW pulley
535001110	AFP3001	FW pulley
535001210	AFP0010	FW pulley
5350013000	AFP0003	FW pulley
535001310	AFP0003	FW pulley
5350014000	AFP0017	FW pulley
535001410	AFP0017	FW pulley
5350015000	AFP0008	FW pulley
535001510	AFP0008	FW pulley
5350016000	AFP0015	FW pulley
535001610	AFP0015	FW pulley
535001710	AFP9003	FW pulley
5350018000	AFP0014	FW pulley
535001810	AFP0014	FW pulley
535001910	AFP0007	FW pulley
5350020000	AFP3003	FW pulley
535002010	AFP3003	FW pulley
5350021000	AFP0042	FW pulley
535002110	AFP0042	FW pulley
5350022000	AFP0017	FW pulley
535002210	AFP0017	FW pulley
5350023000	AFP4001	FW pulley
535002310	AFP4001	FW pulley
5350024000	AFP6004	FW pulley
535002410	AFP6004	FW pulley
5350025000	AFP0016	FW pulley
535002510	AFP0016	FW pulley
5350026000	AFP0022	FW pulley
535002610	AFP0022	FW pulley
5350028000	AFP3004	FW pulley
535002810	AFP3004	FW pulley
5350030000	AFP3002	FW pulley
535003010	AFP3002	FW pulley
5350031000	AFP6006	FW pulley
535003110	AFP6006	FW pulley
5350032000	AFP0024	FW pulley
535003210	AFP0024	FW pulley
5350033000	AFP1002	FW pulley
535003310	AFP1002	FW pulley
5350034000	AFP1001	FW pulley
535003410	AFP1001	FW pulley
5350035000	AFP5001	FW pulley
5350036000	AFP3014	FW pulley
535003610	AFP3014	FW pulley
5350037000	AFP4005	FW pulley
535003710	AFP4005	FW pulley
5350039000	AFP3005	FW pulley
535003910	AFP3005	FW pulley
535004110	AFP0023	FW pulley
5350042000	AFP0031	FW pulley
535004210	AFP0031	FW pulley
535004400	AFP2001	FW pulley
5350044000	AFP2001	FW pulley
535004410	AFP2001	FW pulley
535004510	AFP3010	FW pulley
5350046000	AFP6007	FW pulley
535004610	AFP6007	FW pulley
5350047000	AFP0032	FW pulley
535004710	AFP0032	FW pulley
5350048000	AFP3011	FW pulley
535004810	AFP3011	FW pulley
5350050000	AFP0021	FW pulley
535005010	AFP0021	FW pulley
5350051000	AFP0030	FW pulley
5350053000	AFP2003	FW pulley
535005310	AFP2003	FW pulley
535005510	AFP0039	FW pulley
535005910	AFP0029	FW pulley
5350060000	AFP3006	FW pulley
535006010	AFP3006	FW pulley
5350062000	AFP3009	FW pulley
535006210	AFP3009	FW pulley
5350063000	AFP3008	FW pulley
535006310	AFP3008	FW pulley
535006410	AFP3012	FW pulley
5350065000	AFP2002	FW pulley
535006510	AFP2002	FW pulley
5350068000	AFP0046	FW pulley
535006810	AFP0046	FW pulley
5350069000	AFP0038	FW pulley
535006910	AFP0038	FW pulley
5350070000	AFP0019	FW pulley
535007030	AFP0013	FW pulley
535007130	AFP0054	FW pulley

LUK	AS	PRODUCT
5350072000	AFP0007	FW pulley
535007210	AFP0007	FW pulley
5350073000	AFP3013	FW pulley
535007310	AFP3013	FW pulley
535007410	AFP9007	FW pulley
5350075000	AFP0044	FW pulley
535007510	AFP0044	FW pulley
535007610	AFP3010	FW pulley
5350077000	AFP0002	FW pulley
5350079000	AFP3007	FW pulley
535008010	AFP3016	FW pulley
5350081000	AFP0058	FW pulley
535008110	AFP0058	FW pulley
5350082000	AFP0028	FW pulley
535008210	AFP0028	FW pulley
5350084000	AFP0050	FW pulley
535008410	AFP0050	FW pulley
5350086000	AFP0045	FW pulley
535008610	AFP0045	FW pulley
5350088000	AFP0055	FW pulley
535008810	AFP0055	FW pulley
5350089000	AFP0056	FW pulley
535008910	AFP0056	FW pulley
5350090000	AFP9010	FW pulley
535009010	AFP9010	FW pulley
5350094000	AFP5002	FW pulley
535009410	AFP5002	FW pulley
5350095000	AFP0047	FW pulley
535009510	AFP0047	FW pulley
5350096000	AFP0048	FW pulley
535009610	AFP0048	FW pulley
5350098000	AFP9006	FW pulley
535009810	AFP9006	FW pulley
5350099000	AFP0034	FW pulley
535009910	AFP0034	FW pulley
535010010	AFP9009	FW pulley
5350102000	AFP0057	FW pulley
535010210	AFP0057	FW pulley
5350104000	AFP3020	FW pulley
535010410	AFP3020	FW pulley
5350105000	AFP3018	FW pulley
535010510	AFP3018	FW pulley
5350107000	AFP6009	FW pulley
535010710	AFP6009	FW pulley
5350108000	AFP0049	FW pulley
535010810	AFP0049	FW pulley
5350109000	AFP3017	FW pulley
535010910	AFP3017	FW pulley
535011010	AFP6001	FW pulley
5350112000	AFP6013	FW pulley
535011210	AFP6013	FW pulley
5350113000	AFP0048	FW pulley
535011310	AFP0048	FW pulley
5350115000	AFP4002	FW pulley
535011510	AFP4002	FW pulley
535011810	AFP0025	FW pulley
535011910	AFP0036	FW pulley
535012010	AFP9004	FW pulley
5350121000	AFP0052	FW pulley
535012110	AFP0052	FW pulley
535012310	AFP0053	FW pulley
535012410	AFP0033	FW pulley

LUK	AS	PRODUCT
535012510	AFP0059	FW pulley
5350128000	AFP0051	FW pulley
535012810	AFP0051	FW pulley
5350129000	AFP3015	FW pulley
535012910	AFP3015	FW pulley
5350130000	AFP3023	FW pulley
535013010	AFP3023	FW pulley
5350134000	AFP0030	FW pulley
535013710	AFP3024	FW pulley
535014510	AFP5009	FW pulley
5350151000	AFP6002	FW pulley
535015500	AFP0047	FW pulley
535015710	AFP9006	FW pulley
535015900	AFP0013	FW pulley
535016100	AFP0067	FW pulley
535017210	AFP0026	FW pulley
535017310	AFP6005	FW pulley
535018110	AFP6012	FW pulley
535018210	AFP0028	FW pulley
535018310	AFP0028	FW pulley
5350188	AFP0041	FW pulley
535018810	AFP0041	FW pulley
535019110	AFP0062	FW pulley
535134000	AFP0030	FW pulley
711020000	AFP9002	Cover for pulley

MAGNETI MARELLI	AS	PRODUCT
000064833060	IM0001	Ignition Module
000064833100	IM0001	Ignition Module
000094038502	IM0001	Ignition Module
000094038504	IM0003	Ignition Module
000094038526	IM1001	Ignition Module
00084574	ARC4011	Rectifier
060801005010	IC9003	Ignition Coil
063102018010	S4028	Starter
063280071010	S0093	Starter
063321000010	A4063	Alternator
063321011010	A4065	Alternator
063321067010	A4063	Alternator
063321165010	A4047	Alternator
063321604	A4069	Alternator
063321803010	A4024	Alternator
063321819010	A4077	Alternator
063341658000	A4062	Alternator
063377002010	A4058	Alternator
063377004010	A4073	Alternator
063377006010	A4058	Alternator
063377008010	A4058	Alternator
063377011010	A4072	Alternator
063377013010	A4058	Alternator
063377412010	A4021	Alternator
063377413010	A4021	Alternator
063377416010	A6018	Alternator
063377418010	A6026	Alternator
063377424010	A4070	Alternator
063377425010	A4071	Alternator
063377490010	A4073	Alternator
063377490030	A4073	Alternator
063377491010	A4048	Alternator
063377492010	A4042	Alternator
063532613010	A9006	Alternator
064833040	IM4001	Ignition Module

MAGNETI MARELLI	AS	PRODUCT
064833060010	IM0001	Ignition Module
064833100010	IM0001	Ignition Module
085563051010	ARE4004	Regulator
24TR	ARE4008	Regulator
24TRB	ARE4008	Regulator
28010	ARE4008	Regulator
28018A	ARE4010	Regulator
28500	ARC4006	Rectifier
28502	ARC4004	Rectifier
28506	ARC4006	Rectifier
30000A	S0103	Starter
30001A	S0103	Starter
30002A	S0103	Starter
30003A	S0103	Starter
42492165	SS0003	Starter solenoid
4475112	ARE4009	Regulator
50246218	S0015	Starter
50246416	S0047	Starter
50246648	S4020	Starter
54022720	A4001	Alternator
54209061	APC4006	Plastic cover
54209305	ARE4008	Regulator
54209326	ABR4020	Bracket w/stator
54220400	ABR4022	Bracket w/stator
54293284	S9051	Starter
54294543	SA4002	Starter armature
54294569	SA4004	Starter armature
58120022	ARE4003	Regulator
5812002200	ARE4003	Regulator
58120026	ARE4009	Regulator
581200260000	ARE4009	Regulator
58120035	ARE4007	Regulator
581200350000	ARE4007	Regulator
58120053	ARE4004	Regulator
58120055	ARE4003	Regulator
58120056	ARE4004	Regulator
581701070000	IM4001	Ignition Module
581701080000	IM0001	Ignition Module
60737105	SF0006	Starter field coil
60801005	IC9003	Ignition Coil
60801005010	IC9003	Ignition Coil
62362910	SBU9039	Bushing
63011018	S4027	Starter
63101002	S4022	Starter
63101015	S4028	Starter
63101018	S4028	Starter
63101021	S4025	Starter
63101023	S4028	Starter
63102000	S4034	Starter
63102003	S4015	Starter
63102007	S4022	Starter
63102018	S4028	Starter
63102020	S4028	Starter
63102022	S4025	Starter
63103002	S4020	Starter
63103007	S4020	Starter
63103015	S4028	Starter
63103022	S4020	Starter
63103024	S4028	Starter
63103025	S4028	Starter
63103031	S4025	Starter

MAGNETI MARELLI	AS	PRODUCT
63111006	S0073	Starter
63111008	S4027	Starter
63111010	S4027	Starter
63111016	S4027	Starter
63111018	S4027	Starter
63111023	S0087	Starter
63111036	S4027	Starter
63111037	S4027	Starter
63111043	S0087	Starter
63112003	S0105	Starter
63113001	S4031	Starter
63113002	S0195	Starter
63113003	S0246	Starter
63114014	S4017	Starter
63114017	S4035	Starter
63192000	S4034	Starter
63193001	S4031	Starter
63201002	S4022	Starter
63212701	SBU9028	Bushing
63216703	S0092	Starter
63216725	S0118	Starter
63216726	S0118	Starter
63216727	S0118	Starter
63216731	S0118	Starter
63216740	S0092	Starter
63216741	S0092	Starter
63216747	S0118	Starter
63216748	S0118	Starter
63216800	S0116	Starter
63216802	S9054	Starter
63216814	S0114	Starter
63216825	S0116	Starter
63216826	S0116	Starter
63216827	S0116	Starter
63216831	S0116	Starter
63216833	S9054	Starter
63216874	S0116	Starter
63216876	S0114	Starter
63216884	S0114	Starter
63216896	S0110	Starter
63217106	S9052	Starter
63217126	S0152	Starter
63217138	S9052	Starter
63217147	S4037(MM)R	Starter
63217163	S9052	Starter
63217201	S4021	Starter
63217225	S4021	Starter
63217226	S4021	Starter
63217410	S0111	Starter
63220537	S4033	Starter
63220703	S4033	Starter
63220743	S4033	Starter
63221024	A4065	Alternator
63221800	S4039	Starter
63221801	S0204	Starter
63221830	S4039	Starter
63221831	S0204	Starter
63221890	S4039	Starter
63222000	S0133	Starter
63222001	S0132	Starter
63222005	S4035	Starter
63222030	S0133	Starter
63222031	S0132	Starter
63222036	S0204	Starter
63222039	S0132	Starter
63222130	S0133	Starter
63222133	S0204	Starter
63222136	S0132	Starter
63222408	S0128	Starter
63222438	S0128	Starter
63222506	S0128	Starter
63222836	S4033	Starter
63222837	S4033	Starter
63222888	S4022	Starter
63222889	S4022	Starter
63222897	S4033	Starter
63222904	S4015	Starter
63222905	S4033	Starter
63222908	S4033	Starter
63222936	S4022	Starter
63223039	S4016	Starter
63223101	S4020	Starter
63223103	S0103	Starter
63223104	S0103	Starter
63223106	S4034	Starter
63223200	S4022	Starter
63223433	S0052	Starter
63223434	S0015	Starter
63223435	S0044	Starter
63223438	S0030	Starter
63223536	S4027	Starter
63223537	S0073	Starter
63224580	S0118	Starter
63224600	S0116	Starter
63227004	S9019	Starter
63227034	S0103	Starter
63227035	S0103	Starter
63227512	S9061	Starter
63227597	S4019	Starter
63230001	S0103	Starter
63230003	S0103	Starter
63253020	S0069	Starter
63280040	S4029	Starter
63280041	S4030	Starter
63280042	S4025	Starter
63280071	S0093	Starter
63291405	S3015	Starter
63293039	S4016	Starter
63293203	S0103	Starter
63293537	S0073	Starter
63300802	A0012	Alternator
63300900	A0012	Alternator
63300901	A0012	Alternator
63300920	A0012	Alternator
63300921	A0012	Alternator
63303502	A4081	Alternator
63303610	A4059	Alternator
63303701	A4081	Alternator
63303703	A4081	Alternator
63305401	A4059	Alternator
63305506	A4039	Alternator
63305526	A4039	Alternator
63305606	A4039	Alternator
63305801	A4065	Alternator
63306000	A4029	Alternator
63306300	A4029	Alternator
63306301	A4029	Alternator
63306302	A4029	Alternator
63306701	A4081	Alternator
63307106	A4081	Alternator
63307108	A4081	Alternator
63307401	A4059	Alternator
63307431	A4059	Alternator
63307506	A4039	Alternator
63307526	A4039	Alternator
63307801	A4065	Alternator
63308300	A4029	Alternator
63308701	A4081	Alternator
63320001	A4063	Alternator
63320002	A4081	Alternator
63320003	A4065	Alternator
63320004	A4059	Alternator
63320007	A4065	Alternator
63320008	A4065	Alternator
63320013	A4065	Alternator
63320018	A4065	Alternator
63320020	A4065	Alternator
63320023	A4039	Alternator
63320024	A4030	Alternator
63320025	A4029	Alternator
63320026	A4065	Alternator
63320028	A4059	Alternator
63320031	A4065	Alternator
63320032	A4065	Alternator
63320034	A4063	Alternator
63320040	A4018	Alternator
63320042	A4065	Alternator
63320044	A4065	Alternator
63320046	A4065	Alternator
63320047	A4059	Alternator
63320048	A4044	Alternator
63320053	A4065	Alternator
63320060	A4029	Alternator
63320073	A4059	Alternator
63320082	A4044	Alternator
63320083	A4044	Alternator
63320091	A4051	Alternator
63320094	A4047	Alternator
63320100	A4039	Alternator
63320105	A4065	Alternator
63320121	A4065	Alternator
63320122	A4018	Alternator
63320125	A4065	Alternator
63320126	A4065	Alternator
63320127	A4065	Alternator
63320129	A4065	Alternator
63320130	A4059	Alternator
63320132	A4018	Alternator
63320140	A4018	Alternator
63320219	A4003	Alternator
63320277	A4060	Alternator
63320285	A4033	Alternator
63320309	A4079	Alternator

MAGNETI MARELLI	AS	PRODUCT
63320310	A4026	Alternator
63320317	A4054	Alternator
63320333	A4024	Alternator
63320511	A4007	Alternator
63321000	A4063	Alternator
63321001	A4081	Alternator
63321003	A4059	Alternator
63321005	A4059	Alternator
63321011	A4065	Alternator
63321017	A4065	Alternator
63321028	A4065	Alternator
63321041	A4039	Alternator
63321042	A4030	Alternator
63321044	A4030	Alternator
63321045	A4029	Alternator
63321050	A4029	Alternator
63321055	A4029	Alternator
63321056	A4065	Alternator
63321062	A4065	Alternator
63321067	A4063	Alternator
63321071	A4065	Alternator
63321080	A4065	Alternator
63321082	A4018	Alternator
63321086	A4065	Alternator
63321091	A4044	Alternator
63321096	A4065	Alternator
63321103	A4065	Alternator
63321112	A4065	Alternator
63321115	A4029	Alternator
63321120	A4065	Alternator
63321123	A4065	Alternator
63321136	A4018	Alternator
63321149	A4044	Alternator
63321152	A4065	Alternator
63321153	A4065	Alternator
63321154	A4059	Alternator
63321156	A4044	Alternator
63321157	A4044	Alternator
63321159	A4051	Alternator
63321160	A4051	Alternator
63321161	A4029	Alternator
63321163	A4029	Alternator
63321165	A4047	Alternator
63321170	A4008	Alternator
63321173	A4018	Alternator
63321180	A4039	Alternator
63321191	A4065	Alternator
63321198	A4063	Alternator
63321199	A4065	Alternator
63321200	A4003	Alternator
63321204	A4007	Alternator
63321205	A4006	Alternator
63321227	A4049	Alternator
63321232	A4023	Alternator
63321233	A4003	Alternator
63321235	A4069	Alternator
63321237	A4049	Alternator
63321238	A4020	Alternator
63321238A	A4020	Alternator
63321241	A4027	Alternator
63321244	A4005	Alternator
63321246	A4027	Alternator
63321251	A4007	Alternator
63321253	A4057	Alternator
63321257	A4019	Alternator
63321270	A4003	Alternator
63321275	A4007	Alternator
63321276	A4006	Alternator
63321278	A4017	Alternator
63321281	A4069	Alternator
63321282	A4007	Alternator
63321285	A4033	Alternator
63321291	A4053	Alternator
63321295	A4004	Alternator
63321300	A4069	Alternator
63321302	A4016	Alternator
63321310	A4023	Alternator
63321311	A4017	Alternator
63321313	A4025	Alternator
63321316	A4025	Alternator
63321321	A4055	Alternator
63321324	A4031	Alternator
63321328	A4060	Alternator
63321331	A4049	Alternator
63321332	A4049	Alternator
63321333	A4026	Alternator
63321340	A4057	Alternator
63321343	A4031	Alternator
63321344	A4031	Alternator
63321346	A4033	Alternator
63321347	A4033	Alternator
63321348	A4078	Alternator
63321349	A4027	Alternator
63321351	A4079	Alternator
63321352	A4026	Alternator
63321355	A4024	Alternator
63321356	A4022	Alternator
63321358	A4032	Alternator
63321361	A4006	Alternator
63321362	A4007	Alternator
63321367	A4007	Alternator
63321409	A4065	Alternator
63321418	A4023	Alternator
63321419	A4024	Alternator
63321422	A4031	Alternator
63321423	A4025	Alternator
63321425	A4019	Alternator
63321434	A4054	Alternator
63321436	A4024	Alternator
63321453	A4049	Alternator
63321465	A4031	Alternator
63321473	A4031	Alternator
63321485	A4049	Alternator
63321488	A4018	Alternator
63321489	A4049	Alternator
63321491	A4056	Alternator
63321493	A4065	Alternator
63321497	A4043	Alternator
63321501	A4043	Alternator
63321506	A4024	Alternator
63321507	A4034	Alternator
63321600	A4003	Alternator
63321603	A4069	Alternator
63321604	A4069	Alternator
63321605	A4003	Alternator
63321606	A4004	Alternator
63321607	A4004	Alternator
63321611	A4017	Alternator
63321614	A4017	Alternator
63321615	A4007	Alternator
63321616	A4007	Alternator
63321617	A4006	Alternator
63321618	A4016	Alternator
63321620	A4053	Alternator
63321626	A4075	Alternator
63321636	A4064	Alternator
63321641	A3020	Alternator
63321658	A4061	Alternator
63321660	A4007	Alternator
63321661	A4007	Alternator
63321666	A4019	Alternator
63321669	A4005	Alternator
63321671	A4052	Alternator
63321678	A4028	Alternator
63321679	A4035	Alternator
63321691	A4005	Alternator
63321692	A4022	Alternator
63321692A	A4022	Alternator
63321693	A4078	Alternator
63321695	A4019	Alternator
63321702	A4061	Alternator
63321704	A4022	Alternator
63321705	A4078	Alternator
63321711	A4045	Alternator
63321711B	A4045	Alternator
63321712	A4003	Alternator
63321718	A4058	Alternator
63321724	A4005	Alternator
63321727	A4064	Alternator
63321730	A4005	Alternator
63321730A	A4005	Alternator
63321730B	A4005	Alternator
63321733	A3032	Alternator
63321741	A4076	Alternator
63321746	A4021	Alternator
63321758	A4046	Alternator
63321765	A4058	Alternator
63321770	A3020	Alternator
63321771	A4052	Alternator
63321775	A4058	Alternator
63321778	A4046	Alternator
63321788	A4075	Alternator
63321792	A4049	Alternator
63321800	A4027	Alternator
63321801	A4023	Alternator
63321802	A4025	Alternator
63321803	A4024	Alternator
63321804	A4043	Alternator
63321805	A4043	Alternator
63321806	A4043	Alternator
63321809	A4017	Alternator
63321819	A4077	Alternator
63321823	A4021	Alternator

MAGNETI MARELLI	AS	PRODUCT
63321826	A4043	Alternator
63321829	A3032	Alternator
63321848	A4003	Alternator
63321858	A4056	Alternator
63321859	A4034	Alternator
63321862	A4050	Alternator
63321896	A4061	Alternator
63321897	A4061	Alternator
63321898	A4021	Alternator
63321936	A6010	Alternator
63328506	ARC4006	Rectifier
63340004	A4032	Alternator
63341238	A4020	Alternator
63341244	A4005	Alternator
63341257	A4019	Alternator
63341321	A4055	Alternator
63341333	A4026	Alternator
63341343	A4031	Alternator
63341344	A4031	Alternator
63341351	A4079	Alternator
63341356	A4022	Alternator
63341358	A4032	Alternator
63341434	A4054	Alternator
63341636	A4064	Alternator
63341641	A3020	Alternator
63341658	A4062	Alternator
63341666	A4019	Alternator
63341678	A4028	Alternator
63341679	A4035	Alternator
63341695	A4019	Alternator
63341702	A4062	Alternator
63341704	A4022	Alternator
63341711	A4045	Alternator
63341727	A4064	Alternator
63341730	A4005	Alternator
63341733	A3032	Alternator
63341746	A4021	Alternator
63341758	A4046	Alternator
63341770	A3020	Alternator
63341778	A4046	Alternator
63341896	A4061	Alternator
633770013	A4058	Alternator
63377004	A4073	Alternator
63377006	A4058	Alternator
63377008	A4058	Alternator
63377011	A4072	Alternator
63377013	A4058	Alternator
63377401	A4028	Alternator
63377402	A4035	Alternator
63377404	A4021	Alternator
63377409	A4028	Alternator
63377410	A4035	Alternator
63377412	A4021	Alternator
63377413	A4021	Alternator
63377416	A6018	Alternator
63377418	A6026	Alternator
63377421	A4068	Alternator
63377424	A4070	Alternator
63377425	A4071	Alternator
63377426	A4083	Alternator
63377490	A4073	Alternator

MAGNETI MARELLI	AS	PRODUCT
63377491	A4048	Alternator
63377492	A4042	Alternator
63395575	A4065	Alternator
63522235060	S0164	Starter
63533250	A0140	Alternator
63601963	SS4016	Starter solenoid
63601966	SS4016	Starter solenoid
63602106	SS4020	Starter solenoid
63602109	SS4001	Starter solenoid
63602404	SS4001	Starter solenoid
63602502	SS4001	Starter solenoid
63621501	ARC4008	Rectifier
63621503	ARC4008	Rectifier
63621601	ARC4009	Rectifier
63621603	ARC4009	Rectifier
63621610	ARC4009	Rectifier
63622601	ARC4009	Rectifier
63622801	ARC4008	Rectifier
63622901	ARC4017	Rectifier
63623001	ARC4009	Rectifier
63623010	ARC4009	Rectifier
63623301	ARC4014	Rectifier
63623602	ARC4015	Rectifier
63623701	ARC4007	Rectifier
63623801	ARC4007	Rectifier
63624201	ARC4016	Rectifier
63624202	ARC4013	Rectifier
63624301	ARC4013	Rectifier
63624901	ARC4007	Rectifier
63625002	ARC4018	Rectifier
63625003	ARC4019	Rectifier
63625003010	ARC4019	Rectifier
63625801	ARC4016	Rectifier
63626002	ARC4020	Rectifier
63633801	SS4003	Starter solenoid
63633806	SS4003	Starter solenoid
63633825	SS4003	Starter solenoid
63633901	SS4004	Starter solenoid
63633902	SS4004	Starter solenoid
63633925	SS4004	Starter solenoid
63633933	SS4004	Starter solenoid
63693801	SS4003	Starter solenoid
64800007	ARE0015	Regulator
64808010	ARE0001	Regulator
64808011	ARE0001	Regulator
64808012	ARE0001	Regulator
64808100	ARE0001	Regulator
64808106	ARE4009	Regulator
64808140	ARE4009	Regulator
64808143	ARE4009	Regulator
64808182	ARE4007	Regulator
64808184	ARE4007	Regulator
64808241	ARE4007	Regulator
64808243	ARE4007	Regulator
64826011	ARC4023	Rectifier
64826022	ARC4023	Rectifier
64826040	ARC4023	Rectifier
64833040	IM4001	Ignition Module
64833040010	IM4001	Ignition Module
64833060	IM0001	Ignition Module
64833100	IM0001	Ignition Module

MAGNETI MARELLI	AS	PRODUCT
66201595	ARE4002	Regulator
72139001	SD4005	Drive
72159801	SD4016	Drive
72161601	SA4010	Starter armature
72163201	SA4018	Starter armature
72163701	SA4009	Starter armature
72362510	SBU9028	Bushing
72362910	SBU9039	Bushing
72363402	SD4005	Drive
72365010	SBU9038	Bushing
72382301	SA4012	Starter armature
72383701/02	MASX17-18	Sta. Brush set
72397101	SD4005	Drive
72399502	SD4029	Drive
74860300	SBU9029	Bushing
74860380	SBU9036	Bushing
74866611	SD4004	Drive
74867401	SD4004	Drive
74868210	SBU9037	Bushing
74874241	SD4004	Drive
74876641	ABH4001	A. Brush holder
748774701	ARC4023	Rectifier
74877741	ARC4023	Rectifier
74878691	ARC4023	Rectifier
74880071	AR4005	Rotor
74880941	JSX21-22	Sta. Brush set
74881121	JSX21-22	Sta. Brush set
74881151	JSX21-22	Sta. Brush set
74885111	SD4010	Drive
74886131	SD4007	Drive
74886931	SA4011	Starter armature
74886971	SD4006	Drive
74887061	SD4007	Drive
74888501	SD4010	Drive
74888761	SD4011	Drive
74888921	SA4007	Starter armature
74889271	SD4006	Drive
74891011	SA4008	Starter armature
74891116	SD4012	Drive
74891161	SD4012	Drive
74892151	SA4011	Starter armature
74892421	SA4001	Starter armature
74893901	SD4009	Drive
74894221	SA4001	Starter armature
7489438/1	JSX31-32	Sta. Brush set
7489439/1	JSX31-32	Sta. Brush set
74895431	SD4011	Drive
74896591	SD4014	Drive
74896851	SD4015	Drive
74898071	SD4012	Drive
74899021	SA4001	Starter armature
74984951	ARC4023	Rectifier
74986301	ARC4023	Rectifier
74986411	ARC0045	Rectifier
74986521	AS4001	Stator
74987171	AR4005	Rotor
74988801	AR4005	Rotor
74989441	AR4005	Rotor
74990431	ABH4002	A. Brush holder
74990451	ABH4002	A. Brush holder
74991161	SD4012	Drive

MAGNETI MARELLI	AS	PRODUCT
74995001	ARC0045	Rectifier
74995801	ARC0045	Rectifier
74999461	ABH4002	A. Brush holder
74999891	ABH4002	A. Brush holder
79026087	SS0009	Starter solenoid
79026095	SBH0001	S. Brush holder
79033956	SS0003	Starter solenoid
79033957	SBH0003	S. Brush holder
79034659	SS0003	Starter solenoid
79036683	SS4003	Starter solenoid
79036685	SS4004	Starter solenoid
79705021	JX42	Alt. Brush set
79707161	ARE4003	Regulator
79707441	ARE4006	Regulator
79707481	ARE4003	Regulator
82368225	SS0011	Starter solenoid
83220271	SA4002	Starter armature
83220461	SBH4004	S. Brush holder
83221241	JSX35-36	Sta. Brush set
832220401	JSX33-34	Sta. Brush set
832220411	JSX33-34	Sta. Brush set
83222270	ABE9045	Bearing
83222681	SBH4004	S. Brush holder
83222921	SA4002	Starter armature
83224461	JSX38-39-40	Sta. Brush set
83225127	SA4006	Starter armature
83225326	JSX38-41	Sta. Brush set
83225359	SBH4003	S. Brush holder
83225727	SA4006	Starter armature
83225739	SBR4002	Starter bracket
83225886	SBH4002	S. Brush holder
83226216	SBH4003	S. Brush holder
83226316	SA4003	Starter armature
83226336	SBH4001	S. Brush holder
83226536	SA4006	Starter armature
83226564	SF4001	Starter field coil
83226569	SD4032	Drive
83226683	SBH4004	S. Brush holder
83226811	SA4006	Starter armature
83226902	SA4019	Starter armature
83227126	SA4004	Starter armature
83227131	SBH4004	S. Brush holder
83227226	SBH4004	S. Brush holder
83227260	SBH4004	S. Brush holder
83228811	SA4006	Starter armature
83600011	AR4003	Rotor
83600101	ABR4030	Bracket
83600151	ARE4003	Regulator
83600721	ABR4028	Bracket
83600811	ABR4028	Bracket
83601221	ABR4028	Bracket
83601541	AS4004	Stator
83602761	AS4001	Stator
83603151	ARE4003	Regulator
83603191	APC4004	Plastic cover
83603211	ABR4029	Bracket
83603671	ARE4003	Regulator
83603731	AR4003	Rotor
83603821	APC4004	Plastic cover
83603941	AR4003	Rotor
83604761	ABR4031	Bracket
83604791	ABR4031	Bracket
83605011	AS4004	Stator
83605871	AR4003	Rotor
83606411	ARE4015	Regulator
83606521	AR4003	Rotor
83606791	APC4004	Plastic cover
83606891	APC4004	Plastic cover
83606931	ABR4028	Bracket
83607021	ABR4032	Bracket
83607111	ARE4007	Regulator
83607121	ARE4007	Regulator
83608351	ABR4003	Bracket w/stator
83608400	APC4001	Plastic cover
83608471	ABR4002	Bracket
83608491	ABR4011	Bracket
83608541	ABR4019	Bracket w/stator
83608581	APC4002	Plastic cover
83609170	ABR4021	Bracket w/stator
83609171	ABR4021	Bracket w/stator
83610231	ARC4012	Rectifier
83610601	AR4002	Rotor
83611361	ARE4004	Regulator
83611391	ABR4004	Bracket w/stator
83611721	APC4004	Plastic cover
83612690	APC4007	Plastic cover
83613011	ARE4004	Regulator
83613151	APC4007	Plastic cover
83613651	ABR4004	Bracket w/stator
83613781	ABR4023	Bracket w/stator
83614611	ABR4027	Bracket
83614890	APC4001	Plastic cover
83615091	AR4002	Rotor
83615541	APC4010	Plastic cover
83615601	APC4003	Plastic cover
83615621	ABR4024	Bracket w/stator
83615891	ABR4002	Bracket
83615991	ABR4005	Bracket
83616611	ABR4016	Bracket
83617171	ARE4005	Regulator
83617181	ARE4005	Regulator
83617721	APC4005	Plastic cover
83617801	AS4002	Stator
83617811	ABR4023	Bracket w/stator
83618001	ABR4037	Bracket w/stator
83618371	ARE3020	Regulator
83618840	APC4009	Plastic cover
83619941	AS4004	Stator
83620581	ABR4023	Bracket w/stator
83621391	ABR4035	Bracket
83621801	ARC4009	Rectifier
83622971	AS4006	Stator
83623581	ABR4002	Bracket
83623631	ABR4005	Bracket
83624631	AS4004	Stator
83624641	AS4001	Stator
83624941	ABR4025	Bracket w/stator
83625041	ABR4034	Bracket
83625051	ABR4033	Bracket w/stator
83627521	ABR4026	Bracket w/stator
8362959	AFP4005	FW pulley
855 414 53	SBR4001	Starter bracket
85511103	SS4020	Starter solenoid
85540011	SS4003	Starter solenoid
85540111	SS4004	Starter solenoid
85540141	SD4015	Drive
85540151	SD4016	Drive
85540191	SD4016	Drive
85540211	SS4004	Starter solenoid
85540221	SS4003	Starter solenoid
85540271	SD4004	Drive
85540321	SD4019	Drive
85540381	SD4009	Drive
85540431	SD4014	Drive
85540451	SD4014	Drive
85540481	SD4011	Drive
85540491	SD4007	Drive
85540521	SD4012	Drive
85540601	SD4006	Drive
85540611	SD4007	Drive
85540651	SD4010	Drive
85540657	SD4010	Drive
85540681	SD4021	Drive
85540711	SS4015	Starter solenoid
85540751	SD4004	Drive
85540831	SD4030	Drive
85540881	SD4024	Drive
85540922	SS4022	Starter solenoid
85540961	SS4011	Starter solenoid
85540971	SD4023	Drive
85540981	SS4010	Starter solenoid
85541003	SS4020	Starter solenoid
85541010	SS4002	Starter solenoid
85541020	SS4016	Starter solenoid
85541030	SD4024	Drive
85541040	SD4019	Drive
85541050	SD4030	Drive
85541070	SS4018	Starter solenoid
85541080	SD4025	Drive
85541160	SD4026	Drive
85541220	SD4033	Drive
85541250	SD4031	Drive
85541260	SS4002	Starter solenoid
85541270	SD4041	Drive
85541280	SD4027	Drive
85541300	SD4039	Drive
85541303	SD4022	Drive
85541310	SS4019	Starter solenoid
85541320	SS4017	Starter solenoid
85541322	SS4017	Starter solenoid
85541323	SS4012	Starter solenoid
85541325	SS4017	Starter solenoid
85541333	LASX36	Sta. Brush set
85541338	LASX36	Sta. Brush set
85541360	SS4008	Starter solenoid
85541400	SS4002	Starter solenoid
85541410	SS4010	Starter solenoid
85541420	SS4020	Starter solenoid
85541430	SS4011	Starter solenoid
85541454	SD4002	Drive
85541459	SD4017	Drive
85541462	SD4013	Drive
85541466	SD4013	Drive

MAGNETI MARELLI	AS	PRODUCT
85541470	SD4035	Drive
85541479	SD4002	Drive
85541488	SD4034	Drive
85541490	SD4002	Drive
85541496	SD4037	Drive
85541503	SD4022	Drive
85541538	SD4008	Drive
85541541	SD4037	Drive
85541544	SD4034	Drive
85541560	SS4002	Starter solenoid
85541670	SS4020	Starter solenoid
85541680	SD4031	Drive
85541690	SD4031	Drive
85541700	SD4032	Drive
85541710	SD4027	Drive
85541717	SS4001	Starter solenoid
85541740	SS4008	Starter solenoid
85541770	SS4008	Starter solenoid
85541780	SD4023	Drive
85541820	SS4011	Starter solenoid
85541870	SD4027	Drive
85541990	SS4021	Starter solenoid
85552103	ARC4018	Rectifier
85552104	ARC4018	Rectifier
85552105	ARC4018	Rectifier
85552106	ARC4018	Rectifier
85552107	ARC4018	Rectifier
85552108	ARC4018	Rectifier
85552109	ARC4018	Rectifier
85552110	ARC4018	Rectifier
85560001	ARC4023	Rectifier
85560011	APC4005	Plastic cover
85560701	APC4005	Plastic cover
85561051	AP4002	Pulley
85561211	AP4001	Pulley
85561291	ARE4004	Regulator
85561381	AFP4004	FW pulley
85561411	AR4002	Rotor
85561421	AR4002	Rotor
85561921	ARE4005	Regulator
85562071	AR4002	Rotor
85562131	AR4002	Rotor
85562208	AR4002	Rotor
85562270	AR4002	Rotor
85562283	AR4002	Rotor
85562541	ARE4011	Regulator
85562671	APC4007	Plastic cover
85562721	APC4007	Plastic cover
85562731	ARE4012	Regulator
85562741	AP4005	Pulley
85562751	AFP4001	FW Pulley
85562801	ARE4011	Regulator
85562881	ARE4012	Regulator
85562931	AFP4001	FW Pulley
85562971	ABR4027	Bracket
85563051	ARE4004	Regulator
85563481	ARE4013	Regulator
85563491	ARE4014	Regulator
85582601	ARE4011	Regulator
85661421	AR4002	Rotor
86226811	SA4006	Starter armature
86307091	AS4001	Stator
940016012300	ARE4011	Regulator
940038005	ARE0031	Regulator
940038006	ARE0015	Regulator
940038007	ARE0027	Regulator
940038009	ARE0002	Regulator
940038010	ARE0016	Regulator
940038011	ARE0037	Regulator
940038012	ARE0006	Regulator
940038013	ARE0002	Regulator
940038014	ARE0003	Regulator
940038015	ARE0004	Regulator
940038016	ARE0007	Regulator
940038018	ARE0005	Regulator
940038023	ARE0017	Regulator
940038024	ARE0039	Regulator
940038026	ARE0011	Regulator
940038028	ARE0010	Regulator
940038030	ARE1005	Regulator
940038031	ARE1001	Regulator
940038032	ARE1010	Regulator
940038035	ARE1009	Regulator
940038036	ARE1017	Regulator
940038037	ARE1008	Regulator
940038046	ARE3018	Regulator
940038067	ARE2006	Regulator
940038068	ARE9004	Regulator
940038069	ARE2001	Regulator
940038070	ARE2012	Regulator
940038071	ARE2004	Regulator
940038072	ARE2005	Regulator
940038074	ARE6021	Regulator
940038075	ARE5032	Regulator
940038076	ARE5001	Regulator
940038077	ARE6001	Regulator
940038079	ARE5014	Regulator
940038080	ARE2003	Regulator
940038082	ARE5006	Regulator
940038083	ARE5002	Regulator
940038084	ARE5011	Regulator
940038085	ARE5004	Regulator
940038087	ARE6008	Regulator
940038088	ARE5005	Regulator
940038089	ARE2002	Regulator
940038093	ARE6028	Regulator
940038097	ARE6015	Regulator
940038100	ARE5033	Regulator
940038102	ARE5012	Regulator
940038103	ARE5020	Regulator
940038111	ARE9001	Regulator
940038146	ARE3017	Regulator
940038151	ARE3001	Regulator
940038161	ARE3003	Regulator
940038162	ARE3004	Regulator
940038168	ARE3014	Regulator
940038169	ARE3011	Regulator
940038173	ARE3025	Regulator
940038174	ARE3013	Regulator
940038185	ARE3009	Regulator
940038186	ARE3002	Regulator
940038187	ARE3005	Regulator
940038191	ARE3006	Regulator
940038194	ARE4004	Regulator
940038200	ARC0003	Rectifier
940038201	ARC0004	Rectifier
940038202	ARC0045	Rectifier
940038203	ARC0011	Rectifier
940038207	ARC0030	Rectifier
940038208	ARC0022	Rectifier
940038209	ARC0009	Rectifier
940038210	ARC0062	Rectifier
940038214	ARC0041	Rectifier
940038215	ARC0012	Rectifier
940038219	ARC1002	Rectifier
940038229	ARC0031	Rectifier
940038234	ARC0051	Rectifier
940038247	ARC5020	Rectifier
940038250	ARC2011	Rectifier
940038251	ARC2004	Rectifier
940038252	ARC2002	Rectifier
940038253	ARC2001	Rectifier
940038254	ARC2005	Rectifier
940038255	ARC5002	Rectifier
940038257	ARC5016	Rectifier
940038258	ARC5025	Rectifier
940038259	ARC5053	Rectifier
940038260	ARC5008	Rectifier
940038261	ARC5011	Rectifier
940038265	ARC4010	Rectifier
940038273	ARC4002	Rectifier
940038277	ARC6005	Rectifier
940038279	ARC2016	Rectifier
940038293	ARC3020	Rectifier
940038301	ARC3001	Rectifier
940038302	ARC3003	Rectifier
940038303	ARC3002	Rectifier
940038304	ARC3008	Rectifier
940038305	ARC3007	Rectifier
940038306	ARC3026	Rectifier
940038307	ARC3004	Rectifier
940038308	ARC3017	Rectifier
940038309	ARC3006	Rectifier
940038311	ARC3019	Rectifier
940038315	ARC3011	Rectifier
940038316	ARC3012	Rectifier
940038318	ARC3035	Rectifier
940038325	ARC3015	Rectifier
940038326	ARC3011	Rectifier
940038329	ARC3005	Rectifier
940038330	ARC3009	Rectifier
940038331	ARC3016	Rectifier
940038334	ARC3018	Rectifier
940038353	ARC0020	Rectifier
940038360	ARC0017	Rectifier
940038361	ARC0024	Rectifier
940038362	ARC0032	Rectifier
940038367	ARC0027	Rectifier
940038369	ARC0005	Rectifier
940038370	ARC0044	Rectifier
940038502	IM0001	Ignition Module
940038502010	IM0001	Ignition Module
940038504	IM0003	Ignition Module

MAGNETI MARELLI	AS	PRODUCT
940038504010	IM0003	Ignition Module
940038526010	IM1001	Ignition Module
940038529	IM0002	Ignition Module
940038529010	IM0002	Ignition Module
940038538	IC9004	Ignition Coil
940038538010	IC9004	Ignition Coil
943192000	S4034	Starter
943216818	S9044	Starter
943216876	S0114	Starter
943217407	S9044	Starter
943241058	S6026	Starter
943251059	S0183	Starter
943251302	S0144	Starter
943251322	S0190R	Starter
943251334	S0098	Starter
943251340	S0104	Starter
943251694	S0087	Starter
943252071	S0115	Starter
943252204	S0115	Starter
943252205	S0068	Starter
943252208	S0107	Starter
943252217	S9044	Starter
943252232	S9054	Starter
943252256	S0117	Starter
943252271	S0115	Starter
943252276	S9043	Starter
943252295	S0112	Starter
943252858	S0148	Starter
943253114	S0098	Starter
943253115	S3019	Starter
943253138	S0106	Starter
943253156010	S9058	Starter
943253157	S0030	Starter
943289100	S0087	Starter
943293104	S0103	Starter
943321200	A4003	Alternator
943321270	A4003	Alternator
943321328	A4060	Alternator
943321620	A4053	Alternator
943341343	A4031	Alternator
943346048	A2031	Alternator
943355027	A0178	Alternator
943356206	A0031	Alternator
943356465	A0069	Alternator
943356646	A0179	Alternator
943356789	A0202	Alternator
943356859	A0107	Alternator
99339837	SD4018	Drive
9935196	MASX17-18	Sta. Brush set
9935197	MASX17-18	Sta. Brush set
9939837	SD4018	Drive
9940096	IM4001	Ignition Module
9951162	AFP4001	FW pulley
BAE680C	IC9003	Ignition Coil
BKL4A	IM4001	Ignition Module
E100-1.3/12V8	S0128	Starter
E84-0.8/12V3	S4033	Starter
IE38AAA	SS4003	Starter solenoid
IE39AAA	SS4004	Starter solenoid
M125M3-Z9(3/12)	S9055	Starter
MAN2022	A0197	Alternator
MAN7416	A6018	Alternator
MAN7421	A4068	Alternator
MAN7426	A4083	Alternator
MAR5527	A0178	Alternator
MAR5650	A3111	Alternator
MAR898	A0184	Alternator
MSN2037	S0164	Starter
MSN220	S9054	Starter
MSN697	S9043	Starter
MSR218	S9044	Starter
MSR240	S9044	Starter
MSR5356	S9058	Starter
MSR683	S9044	Starter
MSR697	S9044	Starter
MSR707	S9044	Starter
MSR714	S9054	Starter
MSR733	S9056	Starter
MSR737	S9043	Starter
MSR744	S0162	Starter
MSR746	S9056	Starter
MT62A	S4026	Starter
MT62BA	S0116	Starter
MT66B	S9054	Starter
MT66BA	S9054	Starter
MT67A	S0118	Starter
MT67AA	S0118	Starter
MT67AB	S0118	Starter
MT67AC	S0118	Starter
MT67AD	S0118	Starter
MT67C	S0092	Starter
MT67CA	S0092	Starter
MT67CB	S0092	Starter
MT67DA	S0118	Starter
MT67DB	S0118	Starter
MT68A	S0116	Starter
MT68AA	S0116	Starter
MT68AB	S0116	Starter
MT68AC	S0116	Starter
MT68AD	S0116	Starter
MT68LB	S0110	Starter
MT68LC	S0110	Starter
MT68MA	S9055	Starter
MT68MB	S0116	Starter
MT68P	S0114	Starter
MT68PA	S0114	Starter
MT68PB	S0114	Starter
MT68R	S0113	Starter
MT68RA	S0113	Starter
MT68S	S9021	Starter
MT68T	S0115	Starter
MT71A	S0152	Starter
MT71AA	S0152	Starter
MT71AB	S0152	Starter
MT71D	S4037(MM)R	Starter
MT71DA	S4037(MM)R	Starter
MT71DB	S4037(MM)R	Starter
MT71E	S4036(MM)R	Starter
MT71T	S4036(MM)R	Starter
MT71TA	S4036(MM)R	Starter
MT72A	S4021	Starter
MT72AA	S4021	Starter
MT72AB	S4021	Starter
MT74G	S0115	Starter
MT74L	S0111	Starter
MTR02	IM0001	Ignition Module
MTR2	IM0001	Ignition Module
PRD4A	ARC4023	Rectifier
RDD033	ARC4014	Rectifier
RDD15	ARC4008	Rectifier
RDD16	ARC4009	Rectifier
RDD29	ARC4017	Rectifier
RDD30	ARC4009	Rectifier
RDD33	ARC4007	Rectifier
RDD35	ARC4014	Rectifier
RDD36B	ARC4015	Rectifier
RDD37	ARC4007	Rectifier
RDD42	ARC4016	Rectifier
RDD43	ARC4013	Rectifier
RDD50C	ARC4019	Rectifier
RT110ABT	ARE0001	Regulator
RTM121A	ARE4004	Regulator
RTM151A	ARE4004	Regulator
RTM151B	ARE4004	Regulator
RTM151C	ARE4004	Regulator
RTM152A	ARE4004	Regulator
RTM153B	ARE4005	Regulator
RTM154A	ARE4005	Regulator
RTM200.01	ARE4012	Regulator
RTM200.03	ARE4013	Regulator
RTM300.01	ARE4014	Regulator
RTT110A	ARE0001	Regulator
RTT110AB	ARE0001	Regulator
RTT110ABT	ARE0001	Regulator
RTT114A	ARE4009	Regulator
RTT114C	ARE4009	Regulator
RTT118C	ARE4007	Regulator
RTT118E	ARE4007	Regulator
RTT118J	ARE4007	Regulator
RTT118L	ARE4007	Regulator
RTT119A	ARE4003	Regulator
RTT119AAC	ARE4003	Regulator
RTT119AC	ARE4003	Regulator
RTT119B	ARE4006	Regulator
RTT121A	ARE4008	Regulator
for CA1766IR	ABR4039	Bracket
for CA1890IR	ABR4040	Bracket w/stator

MAGNETON	AS	PRODUCT
0134291	ARE9018	Regulator
0134541	ARE9018	Regulator
0134731	ARE9019	Regulator
0135240	ARC9019	Rectifier
0135241	ARC9019	Rectifier
0136110	ARE9018	Regulator
0136131	ARE9018	Regulator
0137890	ABR9002	Bracket
0138600	AFP0010	FW pulley
0138601	AFP0010	FW pulley
0138620	AFP0014	FW pulley
0138721	AR9002	Rotor
0138751	AS9002	Stator
0138801	ARC9022	Rectifier
0138841	ARE9028	Regulator

MAGNETON	AS	PRODUCT
0143411	ARE9018	Regulator
0143491	ARE9019	Regulator
02914207	S9057	Starter
113 937 150 870	SS9007	Starter solenoid
11490400	S9057	Starter
114904000	S9057	Starter
19950405001	ABE9002	Bearing
323125723125	SBU9006	Bushing
324162016	ABE9002	Bearing
324162047	ABE9002	Bearing
334113516414	A3012	Alternator
441040032266	A9034	Alternator
441040092206	S9058	Starter
442115144702	S9023	Starter
443 930 134 291	ARE9018	Regulator
443 930 134 540	ARE9018	Regulator
443 930 134 541	ARE9018	Regulator
443 930 134 731	ARE9019	Regulator
443 930 135 641	ARE9018	Regulator
443 930 136 110	ARE9018	Regulator
443 930 136 111	ARE9018	Regulator
443 930 136 131	ARE9018	Regulator
443 930 154 220	SD9003	Drive
443 937 150 171	SD9002	Drive
443 937 150 860	SD9004	Drive
443 937 150 870	SS9007	Starter solenoid
443113516414	A3012	Alternator
443113516590	A9034	Alternator
443113516591	A9034	Alternator
443113516651	A9015	Alternator
443113516653	A3012	Alternator
443113516660	A9015	Alternator
443113516661	A9015	Alternator
443113516662	A9015	Alternator
443113516701	A4011	Alternator
443113516741	A4014	Alternator
443113516751	A9015	Alternator
443113516836	A9030R	Alternator
443113516842	A9030R	Alternator
443113516846	A9030R	Alternator
443115141310	S9010	Starter
443115141311	S9010	Starter
443115141313	S0027	Starter
443115141331	S9011	Starter
443115141336	S9011	Starter
443115141338	S9011	Starter
443115141394	S0027	Starter
443115142071	S9057	Starter
443115142110	S9057	Starter
443115142112	S9057	Starter
443115142702	S9023	Starter
443115142709	S9023	Starter
443115142722	S9024	Starter
443115142743	S9021	Starter
443115142780	S9018	Starter
443115144420	S9024	Starter
443115144620	S9024	Starter
443115144702	S9047	Starter
443115144722	S9024	Starter
443115144723	S9016	Starter
443115144743	S0114	Starter
443115144744	S9053	Starter

MAGNETON	AS	PRODUCT
443115614130	S9010	Starter
443930135240	ARC9019	Rectifier
443937150401	SD9028	Drive
443937151540	SA9008	Starter armature
443937151560	SS9009	Starter solenoid
443937152070	SD9009	Drive
444115144702	S9047	Starter
446115144702	S9047	Starter
6956.360	SBR9005	Starter bracket
6U0911023	S9058	Starter
7150171	SD9002	Drive
7150401	SD9028	Drive
7150860	SD9004	Drive
7150872	SS9007	Starter solenoid
7151540	SA9008	Starter armature
7151542	SA9008	Starter armature
7152060	SD9024	Drive
7152560	SS9009	Starter solenoid
7152762	SS9009	Starter solenoid
7152860	SD9004	Drive
7152960	SD9004	Drive
7153142	SS9009	Starter solenoid
7153180	SD9020	Drive
7153182	SS9009	Starter solenoid
7153360	SD9020	Drive
7153612	SS9009	Starter solenoid
7153780	SD9020	Drive
7153860	SD9004	Drive
7153912	SS9009	Starter solenoid
7154142	SS9009	Starter solenoid
8014241	SD9003	Drive
9141310	S9010	Starter
9141312	S9057	Starter
9141319	S0005	Starter
9141322	S9042	Starter
9141331	S9011	Starter
9141382	S0128	Starter
9141399	S9058	Starter
9141414	S0005	Starter
9141430	S9010	Starter
9141460	S9059	Starter
9142602	S9052	Starter
9142680	S9055	Starter
9142687	S9053	Starter
9142700	S9056	Starter
9142702	S9023	Starter
9142720	S9051	Starter
9142722	S9024	Starter
9142723	S9050	Starter
9142741	S9061	Starter
9142742	S9049	Starter
9142743	S9021	Starter
9142744	S9054	Starter
9142745	S9060	Starter
9142764	S9037	Starter
9142765	S9045	Starter
9142780	S9018	Starter
9142782	S0156	Starter
9142801	S9043	Starter
9142802	S0115	Starter
9142805	S9046	Starter
9142840	S0111	Starter

MAGNETON	AS	PRODUCT
9144702	S9023	Starter
9144703	S9021	Starter
915101A	S3044	Starter
9172780	S9041	Starter
9515122	A9031	Alternator
9515170	A0018	Alternator
9515180	A0082	Alternator
9515230	A0084	Alternator
9515415	A3012	Alternator
9515836	A9030R	Alternator
9516590	A9034	Alternator
9516591	A9034	Alternator
9516661	A9015	Alternator
9516711	A4051	Alternator
9517103	A0125	Alternator
9517183	A0080	Alternator
9517188	A0129	Alternator
9517212	A0042	Alternator
9517218	A0040	Alternator
9517219	A0040	Alternator
9517241	A0158	Alternator
9517413	A0127	Alternator
9999984	S3044	Starter
FOR 9141322	SD9033	Drive

MAKO	AS	PRODUCT
063625001000	ARC4020	Rectifier
074991211000	ARC4023	Rectifier
083625160000	AFP4001	FW pulley
83653301	AFP4003	FW pulley

MAN	AS	PRODUCT
41.26101-7233	A0175	Alternator
51.25201-7181	S0001	Starter
51.25201-9181	S0001	Starter
51.26101-6084	A0022	Alternator
51.26101-7085	A0030	Alternator
51.26101-7144	A0001	Alternator
51.26101-7145	A0020	Alternator
51.26101-7148	A0017	Alternator
51.26101-7156	A0087	Alternator
51.26101-7172	A0203	Alternator
51.26101-7185	A0001	Alternator
51.26101-7190	A0087	Alternator
51.26101-7195	A0002	Alternator
51.26101-7201	A0001	Alternator
51.26101-7217	A0085	Alternator
51.26101-7231	A0175	Alternator
51.26101-7232	A0073	Alternator
51.26101-7234	A0073	Alternator
51.26101-7237	A0114	Alternator
51.26101-7241	A0175	Alternator
51.26101-7242	A0073	Alternator
51.26101-7246	A0062	Alternator
51.26101-7247	A0073	Alternator
51.26101-7249	A0193	Alternator
51.26101-7254	A0192	Alternator
51.26101-7265	A0073	Alternator
51.26101-7269	A0192	Alternator
51.26101-7270	A0062	Alternator
51.26101-7271	A0193	Alternator
51.26101-9144	A0001	Alternator
51.26101-9185	A0001	Alternator
51.26101-9201	A0001	Alternator

MAN	AS	PRODUCT
51.26101-9270	A0062	Alternator
51.26101-9271	A0193	Alternator
51.26201-7034	S0007	Starter
51.26201-7057	S0003	Starter
51.26201-7061	S0003	Starter
51.26201-7085	S0040	Starter
51.26201-7087	S0003	Starter
51.26201-7092	S0001	Starter
51.26201-7095	S0041	Starter
51.26201-7100	S0216	Starter
51.26201-7108	S0001	Starter
51.26201-7110	S0003	Starter
51.26201-7112	S0151	Starter
51.26201-7114	S0001	Starter
51.26201-7118	S0040	Starter
51.26201-7119	S0041	Starter
51.26201-7123	S0003	Starter
51.26201-7127	S0001	Starter
51.26201-7129	S0001	Starter
51.26201-7136	S0167	Starter
51.26201-7137	S0001	Starter
51.26201-7143	S0040	Starter
51.26201-7152	S0040	Starter
51.26201-7153	S0041	Starter
51.26201-7157	S0078	Starter
51.26201-7158	S0085	Starter
51.26201-7159	S0001	Starter
51.26201-7162	S0040	Starter
51.26201-7181	S0001	Starter
51.26201-7183	S0078	Starter
51.26201-7193	S0180	Starter
51.26201-7212	S0085	Starter
51.26201-7213	S0078	Starter
51.26201-7220	S0147	Starter
51.26201-7221	S0167	Starter
51.26201-7222	S0180	Starter
51.26201-7223	S0181	Starter
51.26201-7239	S0147	Starter
51.26201-9034	S0007	Starter
51.26201-9057	S0003	Starter
51.26201-9061	S0003	Starter
51.26201-9074	S0151	Starter
51.26201-9117	S0001	Starter
51.26201-9127	S0001	Starter
51.26201-9140	S0041	Starter
51.26201-9143	S0040	Starter
51.26201-9181	S0001	Starter
51262017011	S9052	Starter
81.25601-6029	ARE0035	Regulator
81.26101-6012	A0030	Alternator
81.26101-6079	A0022	Alternator
81.26101-6081	A0022	Alternator
81.26101-6084	A0022	Alternator
81.26101-6086	A0022	Alternator
81.26107-0038	ABR0001	Bracket
81.26201-9013	S0075	Starter
A5.00055-9254	S0150	Starter
AS.00055-9254	S0075	Starter

MANDO	AS	PRODUCT
36112-11140	SBU9030	Bushing
36120-11130	SS5005	Starter solenoid
36120-32510	SS5005	Starter solenoid
36139-11140	SD5004	Drive
36169-32510	SBH5001	S. Brush holder
36170-21740	SBH5007	S. Brush holder
36170-32500	SBH5001	S. Brush holder
3EA0475	ARC5003	Rectifier
3EA0558	ARC5003	Rectifier
A0002655023	A9008	Alternator
A600C003F	ARC5008	Rectifier
A600C0061	ARC5055	Rectifier
A600C0101	ARC5031	Rectifier
A600C0171	ARC5002	Rectifier
A600C0211	ARC5037	Rectifier
A600C02701	ARC5012	Rectifier
A600C10301	ARC5041	Rectifier
A600C3201	ARC5024	Rectifier
AB160108	A9006	Alternator
AB165104	A9004	Alternator
AB175052	A9010	Alternator
AB180128	A9009	Alternator
AB190058	A9005	Alternator
AB190147	A9008	Alternator
AB195141	A9017	Alternator
AD165202	A2002	Alternator
AD165206	A9007	Alternator
AD165320	A2002	Alternator
AD165320Q	A2002	Alternator
AD165321	A2002	Alternator
AD165321Q	A2002	Alternator
AD165440	A9007	Alternator
AD165454	A9007	Alternator
AD165471	A9007	Alternator
AF111225	A9018	Alternator
AF111364	A9001	Alternator
AF111382	A9019	Alternator
AF111390	A9018	Alternator
AF111393	A9019	Alternator
AF175353	A9032	Alternator
HSE225500	S5047	Starter
M39646	S5002	Starter
M43196	S5034	Starter
MC107012	S6017	Starter
MC107023	S6017	Starter
MC108027	S5034	Starter
MC109018	S5002	Starter
MC109025	S5002	Starter
MC109028	S5034	Starter
MG112022	S5019	Starter
MG122423	S9003	Starter
MG122565	S9003	Starter
MG232415	S5008	Starter
TA000A48201	A9019	Alternator
TA000A56901	A9018	Alternator
TA000A61201	A9018	Alternator
TA000A62401	A9019	Alternator
TA500C0041	ARE5005	Regulator
TA500C0062	ARE5004	Regulator
TA500C01501	ARE5011	Regulator
TA500C01901	ARE5033	Regulator
TA500C02001	ARE5008	Regulator
TA500C02401	ARE9006	Regulator
TA500C09001	ARE5044	Regulator
TA500C11601	ARE5043	Regulator

MANDO	AS	PRODUCT
TA600C04602	ARC9018	Rectifier

MASSEY FERGUSON	AS	PRODUCT
1446802M91	S4013	Starter
1447731	S9021	Starter
1447732R1	S4013	Starter
168065M3	S9037	Starter
1688283M5	S9037	Starter
1691805R2	S9037	Starter
1691806R1	S9021	Starter
1808449R2	S9037	Starter
1860093M2	S9021	Starter
1868285R3	S9021	Starter
1868287T	S9021	Starter
1893705T	S9037	Starter
2873006	S9021	Starter
3519400M1	S9021	Starter
3519400M92	S9021	Starter
3539389M91	S4018	Starter
3597371M2	S4001	Starter
3597371R2	S9037	Starter
3597372M2	S9021	Starter
3701909M91	A0054	Alternator
3701913M92	A4014	Alternator
3763362M91	S9021	Starter
3763362M94	S4019	Starter
3780634M1	A3110	Alternator
3930506R1	S9021	Starter
3930509R1	S9021	Starter
6100316M91	A4014	Alternator
70179544M1	S9021	Starter

MAZDA	AS	PRODUCT
0208-24-522	AB5001	Alt. Brush set
0208-24-552	AB5001	Alt. Brush set
0221-23-764	SS6001	Starter solenoid
0221-23-786	SS6001	Starter solenoid
0222-24-720	SA5001	Starter armature
0222-24-722	SD5001	Drive
0222-24-753	SB5007	Sta. Brush set
0222-24-760	SS5001	Starter solenoid
0222-24-760A	SS5001	Starter solenoid
0290-24-556	AB5001	Alt. Brush set
0290-24-841A	SBU9032	Bushing
0324-24-760	SS5033	Starter solenoid
0324-24-760A	SS5033	Starter solenoid
0326-24-556	AB5002	Alt. Brush set
0342-24-760	SS5033	Starter solenoid
0426-24-753	SB5007	Sta. Brush set
0578-23-764	SS6001	Starter solenoid
0604-23-710	SD6013	Drive
0706-24-556	SB5008	Sta. Brush set
0707-24-556	AB5002	Alt. Brush set
0839-24-753	SB5011	Sta. Brush set
0866-24-541	AB5002	Alt. Brush set
1304-24-542	AB6001	Alt. Brush set
1346-24-709	SD6013	Drive
1456-24-510	ARC2012	Rectifier
1758-24-736	SS5033	Starter solenoid
1758-24-736A	SS5033	Starter solenoid
1E03-18-300	A0197	Alternator
1E031810X	IC9003	Ignition Coil
1E031810XA	IC9003	Ignition Coil

MAZDA	AS	PRODUCT
1E031810XB	IC9003	Ignition Coil
1E041810X	IC9003	Ignition Coil
1E0518100B	IC9003	Ignition Coil
1E07-18-300	A4005	Alternator
1E12-18-300	A4005	Alternator
1F2018100	IC9003	Ignition Coil
2869-24-736	SS5006	Starter solenoid
2924-24-552	AB5001	Alt. Brush set
2994-24-352	AB5001	Alt. Brush set
2994-24-552	AB5001	Alt. Brush set
3F01-18-251	IM5001	Ignition Module
4892-24-709	SD5011	Drive
4893-24-722	SD5003	Drive
8088-24-722	SD5002	Drive
8173-24-510	ARC5020	Rectifier
8173-24-520	ARE5001	Regulator
8218-24-760	SS5008	Starter solenoid
8505-18-400	S5034	Starter
8574-24-520	ARE5001	Regulator
8599-24-522	AB5005	Alt. Brush set
8599-24-736	SS5009	Starter solenoid
8599-24-740	SD5027	Drive
8599-24-750	SB5002	Sta. Brush set
8937-24-760	SS5003	Starter solenoid
AA30G-18-400	S5012	Starter
AM15-18-400	S5020	Starter
AM15-18-X10	SS5005	Starter solenoid
AM15-18-X25	SD5005	Drive
B301-18-X45	SD5014	Drive
B307-18-W70	ARE5008	Regulator
B315-18-400	S5012	Starter
B336-18-W17	ARE5033	Regulator
B336-18-W60	ARC5010	Rectifier
B336-18-W60A	ARC5027	Rectifier
B336-18-W60B	ARC5030	Rectifier
B366-18-W60A	ARC5027	Rectifier
B367-18-W77	AB5009	Alt. Brush set
B3C7-18-W60	ARC5052	Rectifier
B3C7-18-W70	ARE5008	Regulator
B3C7-18-W77	AB5009	Alt. Brush set
B505-18-400	S5034	Starter
B593-18-400	S5034	Starter
B61P-18-300	ARE5008	Regulator
B61P-18-400	S5012	Starter
B61P-18-W60	ARC5010	Rectifier
B630-18-400	S5012	Starter
B630-18-400A	S5014	Starter
B630-18-X45	SD5004	Drive
B64J-18-W60	ARC5010	Rectifier
B64J-18-W70	ARE5008	Regulator
B64J-18-W70A	ARE5008	Regulator
B658-18-400	S5012	Starter
B66S-18-300	A5036	Alternator
B66S-18-300C	A5036	Alternator
B66S-18-W45	AS5004	Stator
B675-18-70A	ARE5011	Regulator
B675-18-W60	ARC5008	Rectifier
B675-18-W70	ARE5011	Regulator
B676-18-400	S5034	Starter
B676-18-400A	S5034	Starter
B676-18-400B	S5034	Starter
B6DK-18-400	S5014	Starter
B6S8-18-400	S5034	Starter
B6S8-18-400A	S5034	Starter
B6S8-18-X10	SS5002	Starter solenoid
BPD4-18-X60	SA5013	Starter armature
C201-18-300	A5034	Alternator
C401-18-300	A5029	Alternator
C601-18-400	S0096	Starter
C601-18-400A	S0096	Starter
E27Z-10-316	ARE5001	Regulator
E301-18-400	S5014	Starter
E301-18-400A	S5014	Starter
E301-18-400B	S5014	Starter
E301-24-753	SB5001	Sta. Brush set
E353-18-W70	ARE5004	Regulator
E356-18-400	S5012	Starter
E356-18-W70	ARE5004	Regulator
E356-18-X45	SD5004	Drive
E356-18-X60	SA5009	Starter armature
E356-18-X70	SBH5007	S. Brush holder
E356-18-X81	SBU9030	Bushing
E356-24-510	ARC5018	Rectifier
E356-48-400B	S5034	Starter
E357-18-400	S5012	Starter
E358-18-W70	ARE5004	Regulator
E501-24-753	SB5001	Sta. Brush set
E503-18-W60A	ARC5004	Rectifier
E563-24-510	ARC5018	Rectifier
E5D3-18-W60A	ARC5004	Rectifier
F05-18-400	S5014	Starter
F05-18-400A	S5014	Starter
F210-18-400A	S5012	Starter
F210-18-X70	SBH5007	S. Brush holder
F214-18-X25	SD5006	Drive
F225-18-X556	ASL9005	Slip ring
F225-18-X56	ASL9005	Slip ring
F240-18-400	S5012	Starter
F285-18-W60	ARC5024	Rectifier
F285-18-W70	ARE5015	Regulator
F285-18-W70A	ARE5016	Regulator
F2D4-18-X10	SS5002	Starter solenoid
F601-18-400	S5014	Starter
F601-18-400-9R	S5014	Starter
F601-18-400A	S5014	Starter
F601-18-400B	S5014	Starter
F802-18-400	S5012	Starter
F805-18-400	S5014	Starter
F806-18-400	S5014	Starter
F811-18-W60	ARC5004	Rectifier
F81E-18-W70	ARE5020	Regulator
F825-18-W60	ARC5024	Rectifier
F829-18-V20	IM5001	Ignition Module
F850-18-400	S5014	Starter
F850-18-400A	S5014	Starter
F850-18-400B	S5014	Starter
F850-18-400C	S5014	Starter
F850-18-400E	S5014	Starter
F8B1-18-400	S5012	Starter
F8B1-18-400A	S5012	Starter
F8B1-18-W60	ARC5008	Rectifier
F8B1-18-X60	SA5009	Starter armature
FA05-18-400	S5014	Starter
FE-79-24-520	ARE5004	Regulator
FE01-24-510A	ARC5022	Rectifier
FE05-18-400	S5014	Starter
FE05-24-520	ARE5001	Regulator
FE24-18-W77	AB5006	Alt. Brush set
FE50-18-400	S5014	Starter
FE5A-18-400	S5012	Starter
FE5A-18-400A	S5012	Starter
FE65-24-510	ARC5002	Rectifier
FE65-24-520	ARE5004	Regulator
FE79-18-400	S5014	Starter
FE79-18-W60	ARC5004	Rectifier
FE79-18-X10	SS5033	Starter solenoid
FEFB-18-V20	IM5001	Ignition Module
FP13-18-400	S5037	Starter
FP13-18-X10	SS5017	Starter solenoid
FP34-18-400	S5037	Starter
FP34-18-400A	S5037	Starter
FS05-18-W60	ARC5048	Rectifier
FS05-18-W80	ARC5048	Rectifier
GY02-11-W11A	AFP5001	FW pulley
GY02-18-300A	AFP5001	FW pulley
GY02-18-330	AFP5001	FW pulley
GY02-18-330A	AFP5001	FW pulley
GY02-18-E37Z	AFP5001	FW pulley
GY02-18-W37Z	AFP5001	FW pulley
H833-18-X45	SD5002	Drive
HE41-24-510	ARC5022	Rectifier
JE15-18-W45	AS5004	Stator
JE15-18-W60	ARC5024	Rectifier
JE15-18-W70	ARE5018	Regulator
JE15-18-W70A	ARE5018	Regulator
JE26-18-X10	SS5003	Starter solenoid
JE48-18-W60	ARC5045	Rectifier
JE48-18-W60B	ARC5045	Rectifier
JE48-18-W70	ARE5008	Regulator
JE48-19-W60B	ARC5045	Rectifier
JF01-18-251	IM5001	Ignition Module
JF01-18-X25	SD5007	Drive
K711-18-400C	S6002	Starter
K801-16-W60	ARC5046	Rectifier
K801-18-W11	AFP9003	FW pulley
K801-18-W60	ARC5044	Rectifier
K805-18-X10	SS5003	Starter solenoid
LF0118100	IC9003	Ignition Coil
LF18-18-330	AFP5002	FW pulley
LW18-18-W11	AFP5002	FW pulley
M602-18-X60	SA5005	Starter armature
N202-24-705A	SA5005	Starter armature
N202-24-750	SBH5005	S. Brush holder
N221-18-300	A2036	Alternator
N221-24-510	ARC5017	Rectifier
N221-24-520	ARE5001	Regulator
N326-18-400	S5024	Starter
N326-18-X10	SS5003	Starter solenoid
N326-18-X25	SD5008	Drive
N326-18-X60	SA5011	Starter armature
N350-18-W60	ARC5027	Rectifier
N350-18-W70	ARE5015	Regulator
N3A1-18-W60	ARC5046	Rectifier
PE24-73-1100	S5012	Starter
PN11-18-X10	SS5002	Starter solenoid
PN40-18-X10	SS5003	Starter solenoid

MAZDA	AS	PRODUCT
R201-18-400	S6002	Starter
R201-18-400A	S6002	Starter
R201-18-400B	S6002	Starter
R201-18-400C	S6002	Starter
R201-24-736	SS5016	Starter solenoid
RF-01-24-520	ARE2003	Regulator
RF01-18-400	S6002	Starter
RF01-24-705	SA6005	Starter armature
RF03-18-300C	ARC5025	Rectifier
RF1G-18-300B	A5019	Alternator
RF1H-18-400	S5043	Starter
RF1S-18-300	A5019	Alternator
RF5C-18-300	A5022	Alternator
RF5C-18-330	AFP5004	FW pulley
RF5C-18-400	S5045	Starter
RF71-18-W70	ARE5030	Regulator
RFL1-18-400	S6002	Starter
RGF1-18-W70	ARE5010	Regulator
S208-24-510	ARE2003	Regulator
S215-24-510	ARC5025	Rectifier
SE21-24-520	ARE5002	Regulator
SE45-18-X60	SA5014	Starter armature
SE4518400	S5048	Starter
SE4518400D	S5048	Starter
SEA118400	S5048	Starter
SEA118400B	S5048	Starter
WL11-18-300	A5021	Alternator
WL11-18-300A	A5021	Alternator
WL21-18-300	A5020	Alternator
WL21-18-300A	A5020	Alternator
WL21-18-300T	A5020	Alternator
WL91-18-300	A5020	Alternator
Y401-18-300	A9020	Alternator
Y401-18-400	S9020	Starter
Y401-18-400A	S9020	Starter
Y402-18-300	A3105	Alternator
Y601-18-300	A6010	Alternator
Y601-18-300A	A6010	Alternator
Y601-18-400A	S9036	Starter
Y601-18-400B	S9036	Starter
Y601-18-400C	S9036	Starter
YF09-18-400	S9031	Starter
YF091810X	IC9003	Ignition Coil
Z599-18-W60	ARC5028	Rectifier

MELCO	AS	PRODUCT
1800A061	AFP5009	FW pulley
A252C54375	AFP5005	FW pulley
A252C55875	AFP5007	FW pulley
A525C54375	AFP5005	FW pulley
JK58A-01636A	AFP3017	FW pulley

MERCEDES	AS	PRODUCT
0001500550	A0205R	Alternator
0001500650	A0205R	Alternator
0001501650	A1016R	Alternator
0001501750	A1015R	Alternator
0001501950	A0205R	Alternator
0001502050	A0205R	Alternator
0001502250	A0205R	Alternator
0001502450	A1016R	Alternator
0001502550	A1015R	Alternator
0001502850	A0205R	Alternator
0001512801	S0003	Starter
0001518355	SF0018	Starter field coil
0001519655	SF0014	Starter field coil
0001541049	ABR0004	Bracket
0001542205	ARE0035	Regulator
0001542405	ARE0042	Regulator
0001542406	ARE0042	Regulator
0001542605	ARE0042	Regulator
0001542705	ARE0042	Regulator
0001547115	AR0013	Rotor
0005481416	ARC0050	Rectifier
0011512901	S0007	Starter
0011514101	S0151	Starter
0011516401	S0219(BOSCH)R	Starter
0011516901	S0087	Starter
0011519401	S0067	Starter
0011519601	S0002	Starter
0011519701	S0003	Starter
0011521510	SS0055	Starter solenoid
0011522710	SS0039	Starter solenoid
0011542216	ARC0050	Rectifier
0021510201	S0003	Starter
0021510701	S0002	Starter
0021512601	S0219(BOSCH)R	Starter
0021515301	S0001	Starter
0021516401	S0219(BOSCH)R	Starter
0021518501	S0151	Starter
0021519201	S0167	Starter
0021519401	S0067	Starter
0021543506	ARE0032	Regulator
0021545506	ARE0032	Regulator
0021545606	ARE0032	Regulator
0021547306	ARE0032	Regulator
0021549106	ARE3002	Regulator
0021549602	ARE0032	Regulator
0021549606	ARE0032	Regulator
0031510401	S0002	Starter
0031510501	S0067	Starter
0031510801	S0002	Starter
0031511801	S0002	Starter
0031512901	S0016	Starter
0031514501	S0001	Starter
0031515001	S0029	Starter
0031515701	S0151	Starter
0031516001	S0151	Starter
0031516401	S0001	Starter
0031517301	S0067	Starter
0031517401	S0002	Starter
0031517901	S0051	Starter
0031518601	S0002	Starter
0031518701	S0067	Starter
0031518801	S0002	Starter
0031519801	S0016	Starter
0031543706	ARE0075(BOSCH)	Regulator
0031545706	ARE0066	Regulator
0041512001	S0144	Starter
0041512201	S0067	Starter
0041513501	S0016	Starter
0041513601	S0144	Starter
0041513701	S0051	Starter
0041514401	S0016	Starter
0041514501	S0029	Starter
0041515601	S0016	Starter
0041515901	S0002	Starter
0041516001	S0001	Starter
0041516101	S0003	Starter
0041516201	S1015	Starter
0041516301	S0143	Starter
0041516501	S0029	Starter
0041516701	S0143	Starter
0041516901	S0087	Starter
0041517001	S0029	Starter
0041517101	S0143	Starter
0041517301	S0002	Starter
0041517801	S0051	Starter
0041517901	S0016	Starter
0041518401	S0037	Starter
0041518501	S3020	Starter
0041518601	S0070	Starter
0041518701	S3041	Starter
0041518901	S0026	Starter
0041519201	S0026	Starter
0041519301	S0149	Starter
0041519401	S0019	Starter
0041519701	S0026	Starter
0041541802	A0069	Alternator
0041542002	A0069	Alternator
0041545902	A0069	Alternator
0041546301	S0143	Starter
0041546701	S0143	Starter
0041547101	S0143	Starter
0041547402	A0069	Alternator
0051510601	S0087	Starter
0051511001	S1018	Starter
0051511101	S3020	Starter
0051511301	S3040	Starter
0051512001	S0037	Starter
0051512101	S3020	Starter
0051512201	S1015	Starter
0051512501	S0203	Starter
0051512701	S0001	Starter
0051512801	S0003	Starter
0051512901	S0091	Starter
0051513401	S0087	Starter
0051513601	S0087	Starter
0051513901	S0227	Starter
0051514001	S0227	Starter
0051514601	S0087	Starter
0051514701	S3020	Starter
0051515001	S0074	Starter
0051515301	S0087	Starter
0051516401	S0074	Starter
0051516501	S0136	Starter
0051516601	S3040	Starter
0051517301	S0087	Starter
0051519701	S0037	Starter
0051543102	A0017	Alternator
0051543202	A0109	Alternator
0051543302	A0020	Alternator
0051543402	A0001	Alternator
0051545102	A0017	Alternator
0051545202	A0020	Alternator
0051545302	A0020	Alternator
0051545802	A0069	Alternator
0051546002	A0020	Alternator

MERCEDES	AS	PRODUCT
0051546702	A0069	Alternator
0051547402	A0069	Alternator
0051547502	A0069	Alternator
0051547602	A0069	Alternator
0051547702	A0069	Alternator
0051547802	A0069	Alternator
0051547902	A0069	Alternator
0051548102	A0101	Alternator
0051548202	A0099	Alternator
0051548302	A0017	Alternator
0051548502	A0017	Alternator
0061510101	S0210	Starter
0061510301	S3020	Starter
0061510501	S0136	Starter
0061511501	S1017	Starter
0061512101	S1015	Starter
0061512201	S0037	Starter
0061512501	S0218	Starter
0061513701	S0136	Starter
0061514601	S0218	Starter
0061516901	S5049	Starter
0061517401	S0218	Starter
0061541602	A0014	Alternator
0061541702	A0030	Alternator
0061542402	A0020	Alternator
0061543002	A0069	Alternator
0061543902	A0101	Alternator
0061544002	A0101	Alternator
0061546702	A0017	Alternator
0071518901	S3040	Starter
0071519201	S3040	Starter
0071541202	A0069	Alternator
0071542102	A0017	Alternator
0071542302	A0020	Alternator
0071542402	A0097	Alternator
0071542702	A0001	Alternator
0071544002	A0097	Alternator
0071545302	A0031	Alternator
0071545402	A0031	Alternator
0071545502	A0031	Alternator
0071545602	A0031	Alternator
0071546702	A0015	Alternator
0071546802	A0015	Alternator
0071549202	A0002	Alternator
0071549902	A0002	Alternator
0081543102	A0097	Alternator
0081547802	A0021	Alternator
0081548702	A0031	Alternator
0091540102	A0005	Alternator
0091540202	A0005	Alternator
0091540602	A0016	Alternator
0091540702	A0001	Alternator
0091541502	A0016	Alternator
0091542902	A0172	Alternator
0091543002	A0114	Alternator
0091543402	A0016	Alternator
0091543602	A0003	Alternator
0091543702	A0003	Alternator
0091545802	A0114	Alternator
0091545902	A0005	Alternator
0091546002	A0173	Alternator
0091547602	A0187	Alternator
0091548802	A0003	Alternator
0091549702	A0007	Alternator
0091549802	A0007	Alternator
0091549902	A0011	Alternator
0101540002	A0011	Alternator
0101540202	A0173	Alternator
0101542002	A0001	Alternator
0101543202	A0173	Alternator
0101543802	A3058	Alternator
0101543902	A3082	Alternator
0101544602	A0005	Alternator
0101544702	A0114	Alternator
0101544802	A0133	Alternator
0101545402	A0114	Alternator
0101545502	A0005	Alternator
0101545902	A0035	Alternator
0101546402	A0133	Alternator
0101547502	A0173	Alternator
0101548102	A0173	Alternator
0101548902	A0011	Alternator
0101549002	A0007	Alternator
0101549102	A0007	Alternator
0101549202	A0011	Alternator
0101549502	A0032	Alternator
0101549602	A0035	Alternator
0101549802	A0187	Alternator
0101549902	A0005	Alternator
0111540002	A0133	Alternator
0111540302	A0172	Alternator
0111540402	A0114	Alternator
0111540602	A0032	Alternator
0111540702	A0173	Alternator
0111540902	A0035	Alternator
0111542702	A0206	Alternator
0111543202	A0054	Alternator
0111543502	A3058	Alternator
0111545002	A0021	Alternator
0111545602	A3058	Alternator
0111546002	A3058	Alternator
0111546202	A0206	Alternator
0111546402	A0067	Alternator
0111546802	A0144	Alternator
0111547002	A0169	Alternator
0111547202	A0144	Alternator
0111547802	A0035	Alternator
0111548002	A0223	Alternator
0111548202	A3082	Alternator
0111548602	A0034	Alternator
0111548702	A0053	Alternator
0111548902	A0011	Alternator
0111549102	A0067	Alternator
0111549802	A0201R	Alternator
0121540402	A0034	Alternator
0121540502	A0053	Alternator
0121541002	A0034	Alternator
0121541102	A0053	Alternator
0121541302	A0194	Alternator
0121541502	A0035	Alternator
0121541702	A0169	Alternator
0121542002	A0032	Alternator
0121542202	A0032	Alternator
0121542402	A0035	Alternator
0121544302	A3082	Alternator
0121544402	A3082	Alternator
0121544502	A3058	Alternator
0121544602	A0169	Alternator
0121545402	A0035	Alternator
0121545902	A0218	Alternator
0121546702	A0053	Alternator
0121546802	A0034	Alternator
0121549802	A0201R	Alternator
0131540002	A0222	Alternator
0131541002	A0199	Alternator
0131541302	A0169	Alternator
0131541702	A0032	Alternator
0131542102	A0207	Alternator
0131542802	A0034	Alternator
0131543202	A0169	Alternator
0131544102	A0053	Alternator
0131544202	A0053	Alternator
0131544302	A0053	Alternator
0131545502	A0214R	Alternator
0131547802	A0034	Alternator
0131547902	A0053	Alternator
0131548102	A0067	Alternator
0131548202	A0194	Alternator
0141540702	A0222	Alternator
1121540202	A0067	Alternator
1371500550	A0205R	Alternator
1371500950	A0205R	Alternator
1500255	ARE3053	Regulator
1601540101	A4061	Alternator
1601540201	A4061	Alternator
1601540301	A4062	Alternator
1601540401	A4062	Alternator
1601540501	A4062	Alternator
1601540601	A4062	Alternator
2661550115	AFP3015	FW pulley
2711541002	A0208	Alternator
2711550016	AFP0031	FW pulley
2711550115	AFP0031	FW pulley
2711550215	AFP3022	FW pulley
2751500150	S9045	Starter
3361502350	A0016	Alternator
3661502350	A0016	Alternator
4571510301	S0071	Starter
6281500060	AFP0050	FW pulley
6281550015	AFP0042	FW pulley
6291500060	AFP0036	FW pulley
6291500160	AFP0036	FW pulley
6401500160	AFP3010	FW pulley
6401500360	AFP3010	FW pulley
6401500460	AFP3010	FW pulley
6401500560	AFP3010	FW pulley
6421500062	AFP0050	FW pulley
6421500660	AFP3020	FW pulley
6421500760	AFP3019	FW pulley
6421500860	AFP0050	FW pulley
6461500260	AFP0045	FW pulley
6461510101	S0193	Starter
6461540102	A3107	Alternator
6461550115	AFP3021	FW pulley
6481550015	AFP0045	FW pulley
6601540902	A0223	Alternator

MERCEDES	AS	PRODUCT
6681540102	A3085R	Alternator
6681540202	A3085R	Alternator
6681540302	A3085R	Alternator
6681550115	AFP3010	FW pulley
6681550215	AFP3010	FW pulley
6681550615	AFP3010	FW pulley
9061550215	AFP0046	FW pulley
9061550315	AFP0043	FW pulley
9061550715	AFP0038	FW pulley
9061550815	AFP0039	FW pulley
9061551215	AFP0046	FW pulley
9061551315	AFP0043	FW pulley
9061551415	AFP0038	FW pulley
9061551515	AFP0039	FW pulley
9061552115	AFP0043	FW pulley
A0001500550	A0205R	Alternator
A0001500650	A0205R	Alternator
A0001501650	A1016R	Alternator
A0001501750	A1015R	Alternator
A0001501950	A0205R	Alternator
A0001502050	A0205R	Alternator
A0001502250	A0205R	Alternator
A0001502450	A1016R	Alternator
A0001502550	A1015R	Alternator
A0001502850	A0205R	Alternator
A0001512801	S0003	Starter
A0011512901	S0007	Starter
A0011514101	S0151	Starter
A0011516401	S0219(BOSCH)R	Starter
A0011516901	S0087	Starter
A0011519401	S0067	Starter
A0011519601	S0002	Starter
A0011519701	S0003	Starter
A0021510201	S0003	Starter
A0021510701	S0002	Starter
A0021512601	S0219(BOSCH)R	Starter
A0021515301	S0001	Starter
A0021516401	S0219(BOSCH)R	Starter
A0021518501	S0151	Starter
A0021519401	S0067	Starter
A0031510401	S0002	Starter
A0031510501	S0067	Starter
A0031510801	S0002	Starter
A0031511801	S0002	Starter
A0031512901	S0016	Starter
A0031514501	S0001	Starter
A0031515001	S0029	Starter
A0031515701	S0151	Starter
A0031516001	S0151	Starter
A0031516401	S0001	Starter
A0031517301	S0067	Starter
A0031517401	S0002	Starter
A0031517901	S0051	Starter
A0031518601	S0002	Starter
A0031518701	S0067	Starter
A0031518801	S0002	Starter
A0031519801	S0016	Starter
A0041512001	S0144	Starter
A0041512201	S0067	Starter
A0041513501	S0016	Starter
A0041513601	S0144	Starter
A0041513701	S0051	Starter
A0041514401	S0016	Starter
A0041514501	S0029	Starter
A0041515601	S0016	Starter
A0041515901	S0002	Starter
A0041516001	S0001	Starter
A0041516101	S0003	Starter
A0041516201	S1015	Starter
A0041516301	S0143	Starter
A0041516501	S0029	Starter
A0041516701	S0143	Starter
A0041516901	S0087	Starter
A0041517001	S0029	Starter
A0041517101	S0143	Starter
A0041517301	S0002	Starter
A0041517901	S0016	Starter
A0041518401	S0037	Starter
A0041518501	S3020	Starter
A0041518601	S0070	Starter
A0041518701	S3041	Starter
A0041518901	S3040	Starter
A0041519201	S3040	Starter
A0041519401	S0019	Starter
A0041519701	S3040	Starter
A0041541802	A0069	Alternator
A0041542002	A0069	Alternator
A0041545902	A0069	Alternator
A0041547402	A0069	Alternator
A0051510601	S0087	Starter
A0051511101	S3020	Starter
A0051511301	S3040	Starter
A0051512001	S0037	Starter
A0051512101	S3020	Starter
A0051512201	S1015	Starter
A0051512701	S0001	Starter
A0051512801	S0003	Starter
A0051512901	S0091	Starter
A0051513401	S0087	Starter
A0051513601	S0087	Starter
A0051513901	S0227	Starter
A0051514001	S0227	Starter
A0051514601	S0087	Starter
A0051515001	S1017	Starter
A0051515301	S0087	Starter
A0051516401	S1017	Starter
A0051516501	S0136	Starter
A0051516601	S3040	Starter
A0051519701	S0037	Starter
A0051543102	A0017	Alternator
A0051543202	A0109	Alternator
A0051543302	A0020	Alternator
A0051543402	A0001	Alternator
A0051545102	A0017	Alternator
A0051545202	A0020	Alternator
A0051545802	A0069	Alternator
A0051546002	A0020	Alternator
A0051546702	A0069	Alternator
A0051547402	A0069	Alternator
A0051547502	A0069	Alternator
A0051547602	A0069	Alternator
A0051547702	A0069	Alternator
A0051547802	A0069	Alternator
A0051547902	A0069	Alternator
A0051548102	A0101	Alternator
A0051548202	A0099	Alternator
A0051548302	A0017	Alternator
A0051548502	A0017	Alternator
A0061510301	S3020	Starter
A0061510501	S0136	Starter
A0061511501	S1017	Starter
A0061512101	S1015	Starter
A0061512201	S0037	Starter
A0061512501	S0218	Starter
A0061513701	S0136	Starter
A0061514601	S0218	Starter
A0061516901	S5049	Starter
A0061517401	S0218	Starter
A0061541602	A0014	Alternator
A0061541702	A0030	Alternator
A0061542402	A0020	Alternator
A0061543002	A0069	Alternator
A0061543902	A0101	Alternator
A0061544002	A0101	Alternator
A0061546702	A0017	Alternator
A0071518901	S3040	Starter
A0071519201	S3040	Starter
A0071541202	A0069	Alternator
A0071542102	A0017	Alternator
A0071542302	A0020	Alternator
A0071542402	A0097	Alternator
A0071542702	A0001	Alternator
A0071544002	A0097	Alternator
A0071545302	A0031	Alternator
A0071545402	A0031	Alternator
A0071545502	A0031	Alternator
A0071545602	A0031	Alternator
A0071546702	A0015	Alternator
A0071546802	A0015	Alternator
A0071549202	A0002	Alternator
A0071549902	A0002	Alternator
A0081543102	A0097	Alternator
A0081547802	A0021	Alternator
A0081548702	A0031	Alternator
A0091540102	A0005	Alternator
A0091540202	A0005	Alternator
A0091540602	A0016	Alternator
A0091540702	A0001	Alternator
A0091541502	A0016	Alternator
A0091542902	A0172	Alternator
A0091543002	A0114	Alternator
A0091543402	A0016	Alternator
A0091543602	A0003	Alternator
A0091543702	A0003	Alternator
A0091545802	A0114	Alternator
A0091545902	A0005	Alternator
A0091546002	A0173	Alternator
A0091547602	A0187	Alternator
A0091548802	A0003	Alternator
A0091549702	A0007	Alternator
A0091549802	A0007	Alternator
A0091549902	A0011	Alternator
A0101540002	A0011	Alternator
A0101540202	A0173	Alternator
A0101542002	A0001	Alternator
A0101543202	A0173	Alternator

MERCEDES	AS	PRODUCT
A0101543802	A3058	Alternator
A0101543902	A3082	Alternator
A0101544602	A0005	Alternator
A0101544702	A0114	Alternator
A0101544802	A0133	Alternator
A0101545402	A0114	Alternator
A0101545502	A0005	Alternator
A0101545902	A0035	Alternator
A0101546402	A0133	Alternator
A0101547502	A0173	Alternator
A0101548102	A0173	Alternator
A0101548902	A0011	Alternator
A0101549002	A0007	Alternator
A0101549102	A0007	Alternator
A0101549202	A0011	Alternator
A0101549502	A0032	Alternator
A0101549602	A0035	Alternator
A0101549802	A0187	Alternator
A0101549902	A0005	Alternator
A0111540002	A0133	Alternator
A0111540302	A0172	Alternator
A0111540402	A0114	Alternator
A0111540602	A0032	Alternator
A0111540702	A0173	Alternator
A0111540902	A0035	Alternator
A0111542702	A0206	Alternator
A0111543202	A0054	Alternator
A0111543502	A3058	Alternator
A0111545002	A0021	Alternator
A0111545602	A3058	Alternator
A0111546202	A0206	Alternator
A0111546402	A0067	Alternator
A0111546802	A0144	Alternator
A0111547002	A0169	Alternator
A0111547202	A0144	Alternator
A0111547802	A0035	Alternator
A0111548002	A0223	Alternator
A0111548202	A3082	Alternator
A0111548602	A0034	Alternator
A0111548702	A0053	Alternator
A0111548902	A0011	Alternator
A0111549102	A0067	Alternator
A0111549802	A0201R	Alternator
A0121540402	A0034	Alternator
A0121540502	A0053	Alternator
A0121541002	A0034	Alternator
A0121541102	A0053	Alternator
A0121541302	A0194	Alternator
A0121541502	A0035	Alternator
A0121541702	A0169	Alternator
A0121542002	A0032	Alternator
A0121542202	A0032	Alternator
A0121542402	A0035	Alternator
A0121544302	A3082	Alternator
A0121544402	A3082	Alternator
A0121544502	A3058	Alternator
A0121544602	A0169	Alternator
A0121545402	A0035	Alternator
A0121545902	A0218	Alternator
A0121546702	A0053	Alternator
A0121546802	A0034	Alternator
A0121549802	A0201R	Alternator

MERCEDES	AS	PRODUCT
A0131540002	A0222	Alternator
A0131541002	A0199	Alternator
A0131541302	A0169	Alternator
A0131541702	A0032	Alternator
A0131542102	A0207	Alternator
A0131542802	A0034	Alternator
A0131543202	A0169	Alternator
A0131544202	A0053	Alternator
A0131544302	A0053	Alternator
A0131547802	A0034	Alternator
A0131547902	A0053	Alternator
A0131548102	A0067	Alternator
A0131548202	A0194	Alternator
A0141540702	A0222	Alternator
A1121540202	A0067	Alternator
A1601540101	A4061	Alternator
A1601540201	A4061	Alternator
A1601540301	A4062	Alternator
A1601540401	A4062	Alternator
A1601540501	A4062	Alternator
A1601540601	A4062	Alternator
A2711541002	A0208	Alternator
A3661502350	A0016	Alternator
A4571510301	S0071	Starter
A6461540102	A3107	Alternator
A6601540902	A0223	Alternator
A6611513501	S0016	Starter
A6681540102	A3085R	Alternator
A6681540202	A3085R	Alternator
A6681540302	A3085R	Alternator

MERCURY MARINE	AS	PRODUCT
54-214	SD1021	Drive
54-215	SD9029	Drive
54-8336	SD5039	Drive
76-676C91	ABE9004	Bearing

MIDO	AS	PRODUCT
31620A78B00000	ARC9020	Rectifier

MITSUBA	AS	PRODUCT
SM612-09	S9039	Starter
SM710-01	S9038	Starter

MITSUBISHI	AS	PRODUCT
1810A048	S3058R	Starter
1810A050	S5007	Starter
1810A101	S3002	Starter
44TA0594	A0136	Alternator
5001846418	SD5033	Drive
5001857622	SD5032	Drive
91H20-03330	S5039	Starter
A 2TA1991	A0081	Alternator
A002T27091A	ARE5014	Regulator
A0037A8591	ARE5052	Regulator
A1T33771	A5028	Alternator
A1TA3392	A5024	Alternator
A1TA3392A	A5024	Alternator
A1TA3392C	A5024	Alternator
A252C52775	AFP5006	FW pulley
A252C564FE	AFP5008	FW pulley
A2T01483	A5006	Alternator
A2T01583	A5006	Alternator
A2T01683	A5006	Alternator

MITSUBISHI	AS	PRODUCT
A2T01783	A5006	Alternator
A2T10083	A5006	Alternator
A2T13894	A2024	Alternator
A2T14591	A0152	Alternator
A2T14592	A4019	Alternator
A2T17783	A5018	Alternator
A2T2094B	ARE5041	Regulator
A2T22871	A2036	Alternator
A2T24272	A2036	Alternator
A2T24971	A2036	Alternator
A2T24972	A2036	Alternator
A2T27883	A5018	Alternator
A2T28792	A0152	Alternator
A2T32171	A4059	Alternator
A2T33991	A5036	Alternator
A2T33991A	A5036	Alternator
A2T35791	A2024	Alternator
A2T35791A	A2024	Alternator
A2T40484	A5030R	Alternator
A2T43183	A5030R	Alternator
A2T43583	A5030R	Alternator
A2T71483	A5007	Alternator
A2T71983	A5007	Alternator
A2T73499	A5007	Alternator
A2T81499	A5001	Alternator
A2T81891	A0148	Alternator
A2T82899	A5008	Alternator
A2T82899A	A5008	Alternator
A2T82899AT	A5008	Alternator
A2T82899ZT	A5008	Alternator
A2TA1099	A5021	Alternator
A2TA1099A	A5021	Alternator
A2TA1991	A0163	Alternator
A2TA1991D	A0081	Alternator
A2TA1991F	A0081	Alternator
A2TA1994	A0163	Alternator
A2TA1994B	A0163	Alternator
A2TA1994C	A0163	Alternator
A2TA1994D	A0163	Alternator
A2TA2094	A3022	Alternator
A2TA2094B	A3022	Alternator
A2TA2094C	A3022	Alternator
A2TA2094D	A3022	Alternator
A2TA2292	A4019	Alternator
A2TA2392	A0152	Alternator
A2TA2591	A0148	Alternator
A2TA4991	A5010	Alternator
A2TA5391	A5010	Alternator
A2TA5391ZT	A5010	Alternator
A2TA6099	A5020	Alternator
A2TA6099A	A5020	Alternator
A2TA6099AT	A5020	Alternator
A2TA6099TA	A5020	Alternator
A2TB0491	A2029	Alternator
A2TB0491A	A2029	Alternator
A2TB0892	A5010	Alternator
A2TB1298	A5019	Alternator
A2TB1299	A5019	Alternator
A2TB2191A	A3017	Alternator
A2TB2291	A3023	Alternator
A2TB2291A	A3023	Alternator
A2TB3191	A2006	Alternator

MITSUBISHI	AS	PRODUCT
A2TB3191A	A2006	Alternator
A2TB3891	A2029	Alternator
A2TB3891KD	A2029	Alternator
A2TB4391	A0163	Alternator
A2TB4691	A2029	Alternator
A2TB4791	A3017	Alternator
A2TB4791A	A3017	Alternator
A2TB4791B	A3017	Alternator
A2TB4891	A3023	Alternator
A2TB4891A	A3023	Alternator
A2TB4891B	A3023	Alternator
A2TB4891C	A3023	Alternator
A2TB4891D	A3023	Alternator
A2TB5791ZC	A5010	Alternator
A2TB6481	A5009	Alternator
A2TC0981	A5009	Alternator
A2TN0399	A5001	Alternator
A2TN0499	A5008	Alternator
A2TN0499AT	A5008	Alternator
A2TN0499ZT	A5008	Alternator
A2TN1798	A5025	Alternator
A2TN1798A	A5025	Alternator
A2TN1798AT	A5025	Alternator
A2TN1798ZT	A5025	Alternator
A383T24970	AS5001	Stator
A383T25970	AS5001	Stator
A383T27570	AS5001	Stator
A383T28070	AS5001	Stator
A383T28270	AS5001	Stator
A383T29570	AS5001	Stator
A383T29670	AS5001	Stator
A383T30070	AS5001	Stator
A383T30270	AS5001	Stator
A383T30370	AS5001	Stator
A383T30570	AS5001	Stator
A383T31170	AS5001	Stator
A383T31870	AS5001	Stator
A383T31970	AS5001	Stator
A383T32170	AS5001	Stator
A383T32270	AS5001	Stator
A383T32370	AS5001	Stator
A383T32470	AS5001	Stator
A383T32570	AS5001	Stator
A383T33270	AS5001	Stator
A383T33770	AS5001	Stator
A383T34970	AS5001	Stator
A383T37670	AS5001	Stator
A383T38170	AS5004	Stator
A383T38770	AS5001	Stator
A383T40170	AS5002	Stator
A383T40570	AS5001	Stator
A383T42170	AS5004	Stator
A383T43370	AS5002	Stator
A383T46270	AS5004	Stator
A383T46670	AS5004	Stator
A383T48670	AS5001	Stator
A383T48770	AS5001	Stator
A383X43370	AS5002	Stator
A383X46670	AS5002	Stator
A383X47670	AS5004	Stator
A383X53770	AS5003	Stator
A3T00599	A5012	Alternator
A3T05499	A5012	Alternator
A3T07483	A5004	Alternator
A3T08183	A5014	Alternator
A3T08293	A5011	Alternator
A3T08376	A5011	Alternator
A3T08699	A5017	Alternator
A3T08779	A5017	Alternator
A3T09198	A5017	Alternator
A3T09199	A5017	Alternator
A3T09699	A5017	Alternator
A3T14491	A5016	Alternator
A3T45691	A5027	Alternator
A3T45693	A5027	Alternator
A3T45693ZC	A5027	Alternator
A3T45694	A5027	Alternator
A3T45794	A5011	Alternator
A3T76682	A5005	Alternator
A3TA0591	A3057	Alternator
A3TA0591C	A3057	Alternator
A3TA0591D	A3057	Alternator
A3TA0591E	A3057	Alternator
A3TA0591F	A3057	Alternator
A3TA0791	A5016	Alternator
A3TA0791A	A5016	Alternator
A3TA1191	A5016	Alternator
A3TA1191A	A5016	Alternator
A3TA3098	A5017	Alternator
A3TA3098A	A5017	Alternator
A3TA4298	A5017	Alternator
A3TA4399	A5015	Alternator
A3TA5591	A3096	Alternator
A3TA5591A	A3096	Alternator
A3TA8291	A5035	Alternator
A3TA8291RR	A5035	Alternator
A3TA8591	A5031	Alternator
A3TB2691	A5023	Alternator
A3TB2691C	A5023	Alternator
A3TB2691D	A5023	Alternator
A3TB2691E	A5023	Alternator
A3TB2691F	A5023	Alternator
A3TB2691G	A5023	Alternator
A3TB2691H	A5023	Alternator
A3TB2691J	A5023	Alternator
A3TB2691K	A5023	Alternator
A3TB4981	A5022	Alternator
A3TG0081	ARE5042	Regulator
A3TN0699	A5003	Alternator
A3TN1791	A5002	Alternator
A468C00570	AB5001	Alt. Brush set
A4T02891	A3057	Alternator
A4T02891A	A3057	Alternator
A4T02891B	A3057	Alternator
A4TA0591	A0136	Alternator
A4TA0592	A0136	Alternator
A4TA0594	A0136	Alternator
A4TA8291	A0136	Alternator
A4TA8292	A0136	Alternator
A4TF0091	A3027	Alternator
A4TF0091A	A3027	Alternator
A4TF0091B	A3027	Alternator
A4TR5491	A0064	Alternator
A4TR5491AT	A0064	Alternator
A4TR5491ZT	A0064	Alternator
A4TU6888	A5032	Alternator
A5T00192	A5013	Alternator
A5T00272	A2036	Alternator
A5T03092	A2031	Alternator
A5T03192	A2031	Alternator
A5T04092	A5026	Alternator
A5T04392	A2031	Alternator
A5T04392A	A2031	Alternator
A5T04392B	A2031	Alternator
A5T04492	A2031	Alternator
A5T04492A	A2031	Alternator
A5T04492B	A2031	Alternator
A5T06291	A5026	Alternator
A5T06391	A5026	Alternator
A5T06391ZC	A5026	Alternator
A5T06891	A2007	Alternator
A5T06891A	A2007	Alternator
A5T06891B	A2007	Alternator
A5T06891C	A2007	Alternator
A5T06891D	A2007	Alternator
A5T20871	A2036	Alternator
A5T20872	A2036	Alternator
A5T20972	A2036	Alternator
A5T21871	A2036	Alternator
A5T21897	A2036	Alternator
A5T70178	A5007	Alternator
A5T70183	A5007	Alternator
A5T70185	A5007	Alternator
A5T70283	A5007	Alternator
A5TA3392	A5024	Alternator
A5TA4391	A5033	Alternator
A5TA6291	A3032	Alternator
A5TA6291A	A3032	Alternator
A5TA6291B	A3032	Alternator
A5TA6291C	A3032	Alternator
A5TA6291D	A3032	Alternator
A5TA6291E	A3032	Alternator
A5TA6291F	A3032	Alternator
A5TA6291G	A3032	Alternator
A5TA6291H	A3032	Alternator
A5TA6291ZEB	A3032	Alternator
A5TA6292	A5024	Alternator
A5TA6292C	A5024	Alternator
A5TA6292F	A5024	Alternator
A5TA6292G	A5024	Alternator
A5TA6292ZEB	A5024	Alternator
A5TA6391D	A3032	Alternator
A5TA6392C	A3032	Alternator
A5TA6591	A5033	Alternator
A5TA7692	A5034	Alternator
A5TA7792	A5029	Alternator
A5TG0192A	A3032	Alternator
A5TG0192B	A3032	Alternator
A600C10301	ARC5037	Rectifier
A628X91371	AFP5001	FW pulley
A628X91871	AFP5003	FW pulley
A628X92171	AFP5002	FW pulley
A638X91171	AFP9003	FW pulley
A647X50170	AB5009	Alt. Brush set
A647X50270	AB5009	Alt. Brush set
A647X50870	AB5009	Alt. Brush set

MITSUBISHI	AS	PRODUCT
A648C00471	AB5001	Alt. Brush set
A648C00570	AB5001	Alt. Brush set
A648C01270	AB5008	Alt. Brush set
A648C01271	AB6005	Alt. Brush set
A648C01570	AB5002	Alt. Brush set
A648C02970	AB5007	Alt. Brush set
A648D01070	AB5008	Alt. Brush set
A648D01670	AB5003	Alt. Brush set
A648D01671	AB5003	Alt. Brush set
A648D01970	AB5005	Alt. Brush set
A648D01971	AB5005	Alt. Brush set
A648D02070	AB5003	Alt. Brush set
A648D02271	AB5003	Alt. Brush set
A648D02570	AB5007	Alt. Brush set
A648D02571	AB5007	Alt. Brush set
A648D03070	AB5006	Alt. Brush set
A648D03870	AB5006	Alt. Brush set
A648D03871	AB5006	Alt. Brush set
A648D04170	AB5006	Alt. Brush set
A660C300EX	AFP0014	FW pulley
A680T37770	ARC5010	Rectifier
A860T03970	ARC5020	Rectifier
A860T05170	ARC5020	Rectifier
A860T06070	ARC5017	Rectifier
A860T06082	ARC5017	Rectifier
A860T06470	ARC5017	Rectifier
A860T08270	ARC5016	Rectifier
A860T08370	ARC5022	Rectifier
A860T08470	ARC5015	Rectifier
A860T08770	ARC5025	Rectifier
A860T09370	ARC5022	Rectifier
A860T10470	ARC5022	Rectifier
A860T10770	ARC5018	Rectifier
A860T11970	ARC5002	Rectifier
A860T13170	ARC5053	Rectifier
A860T13270	ARC5004	Rectifier
A860T13370	ARC5002	Rectifier
A860T13470	ARC5056	Rectifier
A860T14570	ARC5019	Rectifier
A860T15170	ARC5025	Rectifier
A860T16170	ARC5004	Rectifier
A860T16470	ARC5056	Rectifier
A860T16770	ARC5003	Rectifier
A860T16970	ARC5053	Rectifier
A860T17070	ARC5056	Rectifier
A860T17270	ARC5006	Rectifier
A860T17285	ARC5006	Rectifier
A860T17570	ARC5004	Rectifier
A860T17770	ARC5007	Rectifier
A860T17779	ARC5007	Rectifier
A860T17970	ARC5004	Rectifier
A860T18370	ARC5022	Rectifier
A860T19970	ARC5004	Rectifier
A860T20070	ARC5013	Rectifier
A860T20099	ARC5013	Rectifier
A860T20270	ARC5054	Rectifier
A860T22370	ARC5011	Rectifier
A860T22570	ARC5053	Rectifier
A860T22670	ARC5053	Rectifier
A860T22770	ARC5001	Rectifier
A860T22970	ARC5011	Rectifier
A860T23070	ARC5038	Rectifier
A860T23270	ARC5031	Rectifier
A860T23370	ARC5041	Rectifier
A860T24270	ARC5004	Rectifier
A860T24570	ARC5057	Rectifier
A860T24970	ARC5004	Rectifier
A860T25470	ARC5011	Rectifier
A860T25870	ARC5008	Rectifier
A860T26070	ARC5041	Rectifier
A860T26970	ARC5004	Rectifier
A860T27020	ARC5056	Rectifier
A860T27070	ARC5012	Rectifier
A860T27170	ARC5008	Rectifier
A860T27270	ARC5055	Rectifier
A860T27370	ARC5004	Rectifier
A860T27970	ARC5003	Rectifier
A860T28070	ARC5038	Rectifier
A860T28370	ARC5056	Rectifier
A860T28670	ARC5021	Rectifier
A860T28770	ARC5023	Rectifier
A860T30170	ARC5030	Rectifier
A860T30370	ARC5009	Rectifier
A860T31370	ARC5024	Rectifier
A860T31770	ARC5058	Rectifier
A860T32170	ARC5032	Rectifier
A860T32470	ARC5011	Rectifier
A860T32570	ARC5010	Rectifier
A860T32670	ARC5014	Rectifier
A860T33470	ARC5027	Rectifier
A860T33970	ARC5059	Rectifier
A860T34070	ARC5024	Rectifier
A860T34570	ARC5009	Rectifier
A860T35270	ARC5037	Rectifier
A860T36070	ARC5040	Rectifier
A860T36770	ARC5045	Rectifier
A860T37070	ARC5052	Rectifier
A860T37770	ARC5010	Rectifier
A860T37870	ARC5010	Rectifier
A860T38270	ARC5027	Rectifier
A860T38670	ARC5044	Rectifier
A860T38770	ARC5035	Rectifier
A860T38970	ARC5048	Rectifier
A860T39070	ARC5052	Rectifier
A860T39770	ARC5009	Rectifier
A860T40270	ARC5044	Rectifier
A860T41470	ARC5056	Rectifier
A860T42070	ARC5043	Rectifier
A860T42170	ARC5048	Rectifier
A860T42270	ARC5048	Rectifier
A860T42670	ARC5034	Rectifier
A860T42770	ARC5036	Rectifier
A860T57870	ARC5028	Rectifier
A860T58070	ARC5061	Rectifier
A860X17299	ARC5006	Rectifier
A860X18271	ARC5001	Rectifier
A860X18371	ARC5001	Rectifier
A860X20099	ARC5013	Rectifier
A860X20299	ARC5054	Rectifier
A860X27299	ARC5055	Rectifier
A860X31799	ARC5058	Rectifier
A860X34799	ARC5058	Rectifier
A860X35472	ARC5048	Rectifier
A860X36499	ARC5055	Rectifier
A860X39770	ARC5014	Rectifier
A860X42770	ARC5036	Rectifier
A860X45281	ARC5010	Rectifier
A860X45670	ARC5052	Rectifier
A860X47770	ARC5030	Rectifier
A860X52570	ARC5047	Rectifier
A860X57870	ARC5028	Rectifier
A860X58070	ARC5061	Rectifier
A860X67170	ARC5034	Rectifier
A861S23087	ARE5014	Regulator
A866T00470	ARE5001	Regulator
A866T00670	ARE5001	Regulator
A866T00870	ARE5032	Regulator
A866T01970	ARE5001	Regulator
A866T02270	ARE5001	Regulator
A866T02570	ARE5001	Regulator
A866T02770	ARE5001	Regulator
A866T02970	ARE2003	Regulator
A866T03070	ARE5002	Regulator
A866T03270	ARE5001	Regulator
A866T03470	ARE5002	Regulator
A866T03870	ARE5014	Regulator
A866T04070	ARE5001	Regulator
A866T05270	ARE5005	Regulator
A866T05272	ARE5004	Regulator
A866T05670	ARE5014	Regulator
A866T06870	ARE5003	Regulator
A866T07670	ARE5002	Regulator
A866T08370	ARE5014	Regulator
A866T09170	ARE5006	Regulator
A866T09780	ARE5013	Regulator
A866T09782	ARE5013	Regulator
A866T13370	ARE5014	Regulator
A866T14470	ARE2003	Regulator
A866T17972	ARE5016	Regulator
A866T18270	ARE5002	Regulator
A866T22770	ARC5001	Rectifier
A866T38570	ARE5045	Regulator
A866T52970	ARE5055	Regulator
A866X00179	ARE5015	Regulator
A866X00870	ARE5032	Regulator
A866X02970	ARE5032	Regulator
A866X04870	ARE5004	Regulator
A866X04871	ARE5004	Regulator
A866X04872	ARE5004	Regulator
A866X05270	ARE5005	Regulator
A866X05272	ARE5004	Regulator
A866X05470	ARE5004	Regulator
A866X05471	ARE5004	Regulator
A866X05472	ARE5004	Regulator
A866X06072	ARE5004	Regulator
A866X06470	ARE5026	Regulator
A866X06471	ARE5005	Regulator
A866X06472	ARE5026	Regulator
A866X07271	ARE5026	Regulator
A866X08070	ARE5026	Regulator
A866X08071	ARE5026	Regulator
A866X08072	ARE5026	Regulator
A866X08471	ARE5029	Regulator
A866X08472	ARE5029	Regulator
A866X08672	ARE5004	Regulator
A866X08771	ARE5026	Regulator

MITSUBISHI	AS	PRODUCT
A866X08872	ARE5005	Regulator
A866X09071	ARE5005	Regulator
A866X09072	ARE2021	Regulator
A866X09170	ARE5006	Regulator
A866X09171	ARE5006	Regulator
A866X09770	ARE5005	Regulator
A866X09771	ARE5005	Regulator
A866X09782	ARE5005	Regulator
A866X09971	ARE5016	Regulator
A866X09972	ARE5016	Regulator
A866X09982	ARE5005	Regulator
A866X10271	ARE5006	Regulator
A866X11681	ARE5004	Regulator
A866X11682	ARE5004	Regulator
A866X12071	ARE5029	Regulator
A866X12472	ARE5005	Regulator
A866X12492	ARE5005	Regulator
A866X12571	ARE5004	Regulator
A866X12672	ARE5006	Regulator
A866X12682	ARE5030	Regulator
A866X12770	ARE5011	Regulator
A866X12772	ARE5011	Regulator
A866X12780	ARE5011	Regulator
A866X12782	ARE5011	Regulator
A866X12980	ARE5011	Regulator
A866X13670	ARE5045	Regulator
A866X13671	ARE5045	Regulator
A866X13970	ARE5027	Regulator
A866X13971	ARE5027	Regulator
A866X14070	ARE5028	Regulator
A866X14072	ARE5028	Regulator
A866X14570	ARE5016	Regulator
A866X14572	ARE5016	Regulator
A866X17072	ARE5018	Regulator
A866X17082	ARE5018	Regulator
A866X17170	ARE5033	Regulator
A866X17172	ARE5033	Regulator
A866X17972	ARE5015	Regulator
A866X17982	ARE5015	Regulator
A866X18371	ARC5001	Rectifier
A866X20472	ARE5006	Regulator
A866X20572	ARE5008	Regulator
A866X20972	ARE5008	Regulator
A866X21072	ARE5018	Regulator
A866X22072	ARE5045	Regulator
A866X22081	ARE5045	Regulator
A866X22272	ARE5020	Regulator
A866X22472	ARE5034	Regulator
A866X22772	ARE5008	Regulator
A866X23072	ARE5034	Regulator
A866X23172	ARE5020	Regulator
A866X23182	ARE5020	Regulator
A866X23183	ARE5020	Regulator
A866X23200	ARE5012	Regulator
A866X24072	ARE5008	Regulator
A866X24082	ARE5008	Regulator
A866X24472	ARE5010	Regulator
A866X24572	ARE5019	Regulator
A866X24972	ARE5010	Regulator
A866X25372	ARE5008	Regulator
A866X25472	ARE5020	Regulator
A866X25572	ARE5010	Regulator
A866X26070	ARE5039	Regulator
A866X26072	ARE5039	Regulator
A866X26172	ARE5025	Regulator
A866X27472	ARE5008	Regulator
A866X27572	ARE5017	Regulator
A866X27772	ARE5008	Regulator
A866X28372	ARE5009	Regulator
A866X28572	ARE5021	Regulator
A866X29272	ARE5011	Regulator
A866X30172	ARE5020	Regulator
A866X34172	ARE5035	Regulator
A866X34572	ARE5019	Regulator
A866X35472	ARE5019	Regulator
A866X35672	ARE5036	Regulator
A866X36272	ARE5040	Regulator
A866X37272	ARE5036	Regulator
A866X39770	ARC5009	Rectifier
A866X39972	ARE5017	Regulator
A866X40272	ARE5036	Regulator
A866X40371	ARE5007	Regulator
A866X41072	ARE5048	Regulator
A866X42672	ARE5040	Regulator
A866X46572	ARE5042	Regulator
A866X48782	ARE5047	Regulator
A866X498	ARE5051	Regulator
A866X50170	ARE5036	Regulator
A866X50572	ARE5054	Regulator
A866X52570	ARC5047	Rectifier
A866X70972	ARE5040	Regulator
A880X67970	AR5001	Rotor
A886T08370	ARE5014	Regulator
A930X94170	ABE9004	Bearing
A930X94570	ABE9006	Bearing
AQ2250D32	A2036	Alternator
GY0118W70	ARE5042	Regulator
J007X00671	IM5001	Ignition Module
J007X00871	IM5001	Ignition Module
JK58A01635A	AFP5006	FW pulley
M0T20871	S3002	Starter
M0T20871ZE	S3002	Starter
M0T21471	S5035	Starter
M0T22471	S3029	Starter
M0T22472	S3016	Starter
M0T30771	S5033	Starter
M0T45071	S3019	Starter
M0T45071ZT	S3019	Starter
M0T45171	S5053	Starter
M0T45171ZT	S5053	Starter
M0T65381	S5039	Starter
M0T70281	S2016	Starter
M0T80285	S2017	Starter
M0T80285A	S2017	Starter
M0T80381	S5037	Starter
M0T81281	S5033	Starter
M0T81283	S5033	Starter
M0T81284	S5033	Starter
M0T81981	S6016	Starter
M0T83581	S2016	Starter
M0T86081	S3002	Starter
M0T86181	S5038	Starter
M0T86481	S5040	Starter
M0T86781	S0126	Starter
M0T87881	S5035	Starter
M0T91581	S5038	Starter
M0T91981	S5054	Starter
M0T91981ZC	S5054	Starter
M105X43671	SA5015	Starter armature
M105X43771	SA5015	Starter armature
M106T01871	SA5006	Starter armature
M106T01970	SA5001	Starter armature
M106T04271	SA5010	Starter armature
M106T05770	SA5009	Starter armature
M106T05771	SA5009	Starter armature
M106T06971	SA5010	Starter armature
M106T07472	SA5009	Starter armature
M106T07771	SA5009	Starter armature
M106T08671	SA5010	Starter armature
M106T16571	SA5001	Starter armature
M106T17271	SA5001	Starter armature
M106T17371	SA5001	Starter armature
M106T50171	SA5010	Starter armature
M106T50271	SA5009	Starter armature
M106T52171	SA5010	Starter armature
M106T52571	SA5009	Starter armature
M106T57671	SA5013	Starter armature
M106X01171	SA5005	Starter armature
M106X01271	SA5006	Starter armature
M106X01471	SA5005	Starter armature
M106X01871	SA5006	Starter armature
M106X02271	SA5004	Starter armature
M106X06971	SA5011	Starter armature
M106X08571	SA5005	Starter armature
M106X08671	SA5010	Starter armature
M106X29171	SA5002	Starter armature
M106X29271	SA5007	Starter armature
M106X29272	SA5007	Starter armature
M106X29371	SA5003	Starter armature
M106X29471	SA5005	Starter armature
M106X29871	SA5004	Starter armature
M106X40471	SA5017	Starter armature
M106X40671	SA5008	Starter armature
M106X40871	SA5014	Starter armature
M106X41271	SA5002	Starter armature
M106X41671	SA5004	Starter armature
M106X41672	SA5004	Starter armature
M106X41673	SA5004	Starter armature
M106X41674	SA5004	Starter armature
M106X41971	SA5007	Starter armature
M106X43571	SA5012	Starter armature
M106X43572	SA5012	Starter armature
M106X43772	SA5015	Starter armature
M106X45071	SA5019	Starter armature
M106X50171	SA5011	Starter armature
M106X50271	SA5009	Starter armature
M106X50471	SA5011	Starter armature
M106X50671	SA5008	Starter armature
M106X50871	SA5009	Starter armature
M106X52171	SA5010	Starter armature
M106X52571	SA5009	Starter armature
M106X52771	SA5009	Starter armature
M106X52871	SA5009	Starter armature
M106X52971	SA5001	Starter armature
M106X53171	SA5005	Starter armature
M106X53271	SA5006	Starter armature

MITSUBISHI	AS	PRODUCT
M106X53571	SA5005	Starter armature
M106X54971	SA5005	Starter armature
M106X55071	SA5006	Starter armature
M106X57171	SA5005	Starter armature
M106X57271	SA5006	Starter armature
M106X57671	SA5013	Starter armature
M106X58571	SA5010	Starter armature
M106X58771	SA5013	Starter armature
M191T12070	SD5005	Drive
M191T12071	SD5005	Drive
M191T12171	SD5006	Drive
M191T12271	SD5021	Drive
M191T12272	SD5021	Drive
M191T12371	SD5007	Drive
M191T12471	SD5005	Drive
M191T12571	SD5018	Drive
M191T12671	SD5036	Drive
M191T12871	SD5019	Drive
M191T12971	SD5025	Drive
M191T13271	SD5006	Drive
M191T13571	SD5017	Drive
M191T13671	SD5020	Drive
M191T14271	SD5039	Drive
M191T14371	SD5021	Drive
M191T14671	SD5020	Drive
M191T15071	SD5023	Drive
M191T15271	SD5021	Drive
M191T16271	SD5008	Drive
M191T16371	SD5009	Drive
M191T16771	SD5030	Drive
M191T16971	SD5030	Drive
M191T18271	SD5020	Drive
M191T19271	SD5035	Drive
M191T22071	SD5004	Drive
M191T22271	SD5013	Drive
M191T22371	SD5004	Drive
M191T22471	SD5016	Drive
M191T22771	SD5004	Drive
M191T22871	SD5013	Drive
M191T22971	SD5004	Drive
M191T23071	SD5004	Drive
M191T23171	SD5013	Drive
M191T23471	SD5004	Drive
M191T26171	SD5012	Drive
M191T26771	SD5014	Drive
M191T30171	SD5001	Drive
M191T30371	SD5003	Drive
M191T30971	SD5001	Drive
M191T30972	SD5001	Drive
M191T30973	SD5001	Drive
M191T30974	SD5002	Drive
M191T31071	SD5003	Drive
M191T31671	SD5001	Drive
M191T33071	SD5001	Drive
M191T33371	SD5002	Drive
M191T33372	SD5002	Drive
M191T33471	SD5010	Drive
M191T34071	SD5002	Drive
M191T34571	SD5001	Drive
M191T35171	SD5002	Drive
M191T36571	SD5015	Drive
M191T57072	SD5028	Drive
M191T57081	SD5028	Drive
M191T57083	SD5028	Drive
M191T58971	SD5011	Drive
M191T68471	SD5034	Drive
M191T68771	SD5029	Drive
M191T68971	SD5022	Drive
M191T76081	SD5039	Drive
M191T94071	SD5038	Drive
M191X13271	SD5006	Drive
M191X13571	SD5017	Drive
M191X16771	SD5030	Drive
M191X16971	SD5030	Drive
M191X68071	SD5023	Drive
M191X68171	SD5029	Drive
M191X68471	SD5034	Drive
M191X68785	SD5029	Drive
M191X68971	SD5022	Drive
M191X69771	SD5032	Drive
M191X93771	SD5032	Drive
M191X94071	SD5038	Drive
M191Y57081	SD5028	Drive
M1T30071	S0186R	Starter
M1T30072	S0186R	Starter
M1T30171	S5042	Starter
M1T30172	S5042	Starter
M1T50171	S0084	Starter
M1T50172	S0084	Starter
M1T60081	S5010	Starter
M1T60381	S5010	Starter
M1T70281	S5040	Starter
M1T70281ZC	S5040	Starter
M1T70283	S5040	Starter
M1T70283ZC	S5040	Starter
M1T70481	S5020	Starter
M1T70481ZC	S5020	Starter
M1T70482	S5020	Starter
M1T70483	S5020	Starter
M1T70483ZC	S5020	Starter
M1T70485	S5020	Starter
M1T70485A	S5020	Starter
M1T70781	S5024	Starter
M1T70781A	S5024	Starter
M1T70881	S5024	Starter
M1T71381	S5019	Starter
M1T71382	S5019	Starter
M1T71382ZC	S5019	Starter
M1T72085	S2016	Starter
M1T72086	S2016	Starter
M1T72086A	S2016	Starter
M1T72087	S2016	Starter
M1T72087A	S2016	Starter
M1T72088	S2016	Starter
M1T72481	S5016	Starter
M1T72481ZC	S5016	Starter
M1T72483	S5016	Starter
M1T72483ZC	S5016	Starter
M1T72581	S5019	Starter
M1T72583	S5019	Starter
M1T72583G	S5019	Starter
M1T72981	S5017	Starter
M1T72981A	S5017	Starter
M1T72985	S5017	Starter
M1T72985A	S5017	Starter
M1T74081	S5023	Starter
M1T74087	S5023	Starter
M1T74181	S5024	Starter
M1T74281	S5015	Starter
M1T74281ZC	S5015	Starter
M1T74283	S5015	Starter
M1T74283ZC	S5015	Starter
M1T74286	S5015	Starter
M1T74286ZC	S5015	Starter
M1T74287ZC	S5015	Starter
M1T74581	S5016	Starter
M1T74583	S5016	Starter
M1T74881	S5020	Starter
M1T75283	S5040	Starter
M1T75681	S5023	Starter
M1T77281	S2017	Starter
M1T78881	S5017	Starter
M1T79081	S5019	Starter
M1T79681	S5021	Starter
M1T79781	S5021	Starter
M1T80081	S3002	Starter
M1T80082	S3002	Starter
M1T80381	S3002	Starter
M1T80481	S3002	Starter
M1T84381	S5015	Starter
M1T84381ZC	S5015	Starter
M1T84481	S5023	Starter
M1T85681	S3058R	Starter
M1T85781	S5044	Starter
M1T85881	S5016	Starter
M1T85981	S3058R	Starter
M1T86481	S5023	Starter
M1T87081	S5040	Starter
M1T90281	S3002	Starter
M2T13081	S3019	Starter
M2T13281	S3021	Starter
M2T13581	S3021	Starter
M2T20771	S2007	Starter
M2T27672	S5003	Starter
M2T32071	S6002	Starter
M2T40081	S5002	Starter
M2T44081	S5002	Starter
M2T44681	S5002	Starter
M2T47281	S5002	Starter
M2T47381	S6016	Starter
M2T47382	S6016	Starter
M2T48381	S3021	Starter
M2T49283	S2017	Starter
M2T49881	S5002	Starter
M2T56171	S5005	Starter
M2T56181	S5005	Starter
M2T56182	S5005	Starter
M2T56185	S5005	Starter
M2T57271	S5005	Starter
M2T57273	S5005	Starter
M2T58581	S5020	Starter
M2T58781	S5021	Starter
M2T58881	S5021	Starter
M2T58881AF	S5021	Starter
M2T60171	S5006	Starter
M2T60172	S5006	Starter

MITSUBISHI	AS	PRODUCT
M2T61071	S5006	Starter
M2T61072	S5006	Starter
M2T61171	S5006	Starter
M2T62271	S5004	Starter
M2T62272	S5004	Starter
M2T62971	S5005	Starter
M2T64172	S5003	Starter
M2T64371	S5052	Starter
M2T64372	S5052	Starter
M2T64373	S5052	Starter
M2T65271	S5003	Starter
M2T65272	S5003	Starter
M2T66871	S5008	Starter
M2T66872	S5008	Starter
M2T66873	S5008	Starter
M2T67871	S5008	Starter
M2T67872	S5008	Starter
M2T67873	S5008	Starter
M2T67881	S5008	Starter
M2T67882	S5008	Starter
M2T67883	S5008	Starter
M2T67884	S5008	Starter
M2T74171	S5046	Starter
M2T74371	S5004	Starter
M2T78071	S5048	Starter
M2T78072	S5048	Starter
M2T78072B	S5048	Starter
M2T78372	S5051	Starter
M2T78381	S5051	Starter
M2T78382	S5051	Starter
M2T78383	S5051	Starter
M2T78731	S5051	Starter
M2T79781	S5021	Starter
M2T80582	S0017	Starter
M2T84171	S5026	Starter
M2T84171ZT	S5026	Starter
M2T84571	S5026	Starter
M2T84771	S0017	Starter
M2T85271	S5050	Starter
M2T85671	S5056	Starter
M2T85672	S5056	Starter
M2T87171	S5026	Starter
M2T87171ZT	S5026	Starter
M2T87371	S5026	Starter
M2T87471	S5043	Starter
M2T87671	S5009	Starter
M2T88071	S5026	Starter
M2T88372	S5031	Starter
M2T88372ZC	S5031	Starter
M2T88671	S5045	Starter
M2T90071	S0084	Starter
M2T92071	S6002	Starter
M2T92071A	S6002	Starter
M2TS0571	S5036	Starter
M2TS0572	S5036	Starter
M2TS0575	S5036	Starter
M321X04471	SBH5003	S. Brush holder
M321X04771	SBH5003	S. Brush holder
M321X05171	SBH5003	S. Brush holder
M321X06671	SBH5003	S. Brush holder
M321X07071	SBH5003	S. Brush holder
M357T61671	SD5027	Drive
M357T70171	SD5024	Drive
M357T70771	SD5024	Drive
M357T70971	SD5024	Drive
M357T71671	SD5027	Drive
M357T71771	SD5024	Drive
M357T72671	SD5026	Drive
M357T72672	SD5026	Drive
M357T72971	SD5027	Drive
M357T73171	SD5031	Drive
M357T73181	SD5027	Drive
M357T73571	SD5037	Drive
M357T76171	SD5027	Drive
M357T78071	SD5024	Drive
M357T84181	SD5027	Drive
M357X73571	SD5037	Drive
M357X83673	SD5026	Drive
M357X85273	SD5026	Drive
M371X00171	SS5001	Starter solenoid
M371X00372	SS5001	Starter solenoid
M371X00392	SS5001	Starter solenoid
M371X02071	SS5006	Starter solenoid
M371X02471	SS5033	Starter solenoid
M371X02871	SS5001	Starter solenoid
M371X12071	SS5006	Starter solenoid
M371X16171	SS5033	Starter solenoid
M371X16371	SS5033	Starter solenoid
M371X16471	SS5033	Starter solenoid
M371X20571	SS5013	Starter solenoid
M371X20572	SS5013	Starter solenoid
M371X30371	SS5033	Starter solenoid
M371X30871	SS5033	Starter solenoid
M371X31271	SS5008	Starter solenoid
M371X33071	SS5033	Starter solenoid
M371X33371	SS5008	Starter solenoid
M371X34571	SS5033	Starter solenoid
M371X42071	SS5006	Starter solenoid
M371X45171	SS5006	Starter solenoid
M371X45971	SS5010	Starter solenoid
M371X46071	SS5012	Starter solenoid
M371X50171	SS5033	Starter solenoid
M371X50671	SS5033	Starter solenoid
M371X53071	SS5033	Starter solenoid
M371X53072	SS5033	Starter solenoid
M371X58671	SS5003	Starter solenoid
M371X58771	SS5033	Starter solenoid
M371X58871	SS5033	Starter solenoid
M371X59271	SS5033	Starter solenoid
M371X60271	SS5005	Starter solenoid
M371X60371	SS5002	Starter solenoid
M371X62171	SS5002	Starter solenoid
M371X62172	SS5002	Starter solenoid
M371X62271	SS5002	Starter solenoid
M371X62272	SS5002	Starter solenoid
M371X62371	SS5002	Starter solenoid
M371X62571	SS5011	Starter solenoid
M371X62671	SS5002	Starter solenoid
M371X62771	SS5002	Starter solenoid
M371X62871	SS5002	Starter solenoid
M371X63071	SS5002	Starter solenoid
M371X63171	SS5030	Starter solenoid
M371X63271	SS5030	Starter solenoid
M371X63371	SS5002	Starter solenoid
M371X63571	SS5030	Starter solenoid
M371X64271	SS5003	Starter solenoid
M371X64273	SS5003	Starter solenoid
M371X64371	SS5028	Starter solenoid
M371X64373	SS5003	Starter solenoid
M371X64471	SS5003	Starter solenoid
M371X64671	SS5003	Starter solenoid
M371X64871	ABH6001	A. Brush holder
M371X64971	SS5003	Starter solenoid
M371X65071	SS5002	Starter solenoid
M371X66371	SS5028	Starter solenoid
M371X66771	SS5003	Starter solenoid
M371X67971	SS5003	Starter solenoid
M371X68871	SS5002	Starter solenoid
M371X69171	SS5031	Starter solenoid
M371X70171	SS5002	Starter solenoid
M371X71171	SS5003	Starter solenoid
M371X71271	SS5002	Starter solenoid
M371X71275	SS5002	Starter solenoid
M371X71371	SS5002	Starter solenoid
M371X71671	SS5003	Starter solenoid
M371X71871	SS5002	Starter solenoid
M371X71973	SS5002	Starter solenoid
M371X72073	SS5002	Starter solenoid
M371X72171	SS5002	Starter solenoid
M371X72173	SS5002	Starter solenoid
M371X72175	SS5002	Starter solenoid
M371X72271	SS5020	Starter solenoid
M371X72371	SS5003	Starter solenoid
M371X73171	SS5003	Starter solenoid
M371X73271	SS5003	Starter solenoid
M371X73671	SS5003	Starter solenoid
M371X74071	SS5017	Starter solenoid
M371X74271	SS5003	Starter solenoid
M371X74371	SS5005	Starter solenoid
M371X74571	SS5003	Starter solenoid
M371X74671	SS5005	Starter solenoid
M371X74771	SS5002	Starter solenoid
M371X74871	SS5003	Starter solenoid
M371X76275	SS5031	Starter solenoid
M371X76371	SS5031	Starter solenoid
M371X78371	SS5028	Starter solenoid
M371X78773	SS5024	Starter solenoid
M371X79273	SS5030	Starter solenoid
M371X80171	SS5033	Starter solenoid
M371X80371	SS5033	Starter solenoid
M371X80671	SS5014	Starter solenoid
M371X80771	SS5033	Starter solenoid
M371X81271	SS5033	Starter solenoid
M371X82671	SS5033	Starter solenoid
M371X83071	SS5033	Starter solenoid
M371X92575	SS5028	Starter solenoid
M371X93475	SS5003	Starter solenoid
M371X93575	SS5020	Starter solenoid
M371X93771	SS5003	Starter solenoid
M371X93975	SS5017	Starter solenoid
M371X94071	SS5011	Starter solenoid
M371X95073	SS5003	Starter solenoid
M371X95275	SS5022	Starter solenoid
M371X98075	SS5002	Starter solenoid
M371XA0373	SS5002	Starter solenoid
M371XA1874	SS5017	Starter solenoid

MITSUBISHI	AS	PRODUCT
M371XB4171	SS5019	Starter solenoid
M371XC3775	SS5032	Starter solenoid
M372X00171	SS5010	Starter solenoid
M372X00471	SS5016	Starter solenoid
M372X02171	SS5010	Starter solenoid
M372X02371	SS5010	Starter solenoid
M372X04171	SS5009	Starter solenoid
M372X06171	SS5029	Starter solenoid
M372X06871	SS5010	Starter solenoid
M372X06971	SS5015	Starter solenoid
M372X10171	SS5007	Starter solenoid
M372X10271	SS5007	Starter solenoid
M372X10371	SS5007	Starter solenoid
M372X10372	SS5007	Starter solenoid
M372X10971	SS5007	Starter solenoid
M372X11071	SS5007	Starter solenoid
M372X11171	SS5007	Starter solenoid
M372X79873	SS5027	Starter solenoid
M372XB0571	SS5023	Starter solenoid
M373X71973	SS5002	Starter solenoid
M375X00171	SS5002	Starter solenoid
M375X00371	SS5026	Starter solenoid
M3T21281	S5025	Starter
M3T21281D	S5025	Starter
M3T21282	S5025	Starter
M3T21781	S5025	Starter
M3T21881	S5025	Starter
M3T21882	S5025	Starter
M3T21882D	S5025	Starter
M3T22581	S5002	Starter
M3T22582	S5002	Starter
M3T24481	S5014	Starter
M3T24482	S5014	Starter
M3T24482A	S5014	Starter
M3T24482H	S5012	Starter
M3T24482HC	S5012	Starter
M3T24482J	S5012	Starter
M3T24482K	S5012	Starter
M3T24485	S5014	Starter
M3T24486	S5014	Starter
M3T24486A	S5014	Starter
M3T24486H	S5012	Starter
M3T25181	S5025	Starter
M3T25781	S5002	Starter
M3T25782	S5002	Starter
M3T25783	S5002	Starter
M3T25785	S5002	Starter
M3T25882	S5002	Starter
M3T25883	S5002	Starter
M3T30281	S5014	Starter
M3T30282	S5014	Starter
M3T30285	S5014	Starter
M3T30286	S5014	Starter
M3T30881	S5012	Starter
M3T32581	S5002	Starter
M3T32582	S5002	Starter
M3T32583	S5002	Starter
M3T32584	S5002	Starter
M3T32585	S6017	Starter
M3T32589	S5002	Starter
M3T32591	S5002	Starter
M3T32592	S5002	Starter

MITSUBISHI	AS	PRODUCT
M3T32593	S5002	Starter
M3T32985	S3015	Starter
M3T32986	S3015	Starter
M3T32988	S3015	Starter
M3T32989	S3015	Starter
M3T33581	S5014	Starter
M3T33582	S5014	Starter
M3T33582A	S5014	Starter
M3T33583	S5012	Starter
M3T33586	S5014	Starter
M3T33586A	S5014	Starter
M3T33586D	S5012	Starter
M3T34781	S5016	Starter
M3T34782	S5016	Starter
M3T37783	S2017	Starter
M3T38881	S5012	Starter
M3T38881A	S5012	Starter
M3T38881B	S5012	Starter
M3T38881C	S5012	Starter
M3T38882	S5012	Starter
M3T38882A	S5012	Starter
M3T38882B	S5012	Starter
M3T38882C	S5012	Starter
M3T38883	S5012	Starter
M3T38885	S5012	Starter
M3T38981	S5016	Starter
M3T40371	S3005	Starter
M3T41081	S5002	Starter
M3T41083	S5002	Starter
M3T41088	S5002	Starter
M3T41185	S5025	Starter
M3T41282	S5002	Starter
M3T41781	S5016	Starter
M3T43181	S5018	Starter
M3T43581	S5034	Starter
M3T49381	S5012	Starter
M3T49481	S5012	Starter
M3T49581	S5012	Starter
M3T54071	S5003	Starter
M3T54072	S5003	Starter
M3T56071	S5013	Starter
M3T56082	S5013	Starter
M3T61071	S5005	Starter
M3T65072	S5013	Starter
M3T80571	S0050	Starter
M3T95071	S5047	Starter
M3T95072	S5047	Starter
M3T95073	S5047	Starter
M3T95081	S5047	Starter
M3T95082	S5047	Starter
M409C32370	SBU9030	Bushing
M409C32401	SBU9050	Bushing
M409C32470	SBU9050	Bushing
M409D30901	SBU9041	Bushing
M409X32471	SBU9050	Bushing
M409X32571	SBU9050	Bushing
M4T55071	S5047	Starter
M4T55076	S5047	Starter
M5T27671	S5003	Starter
M605X71971	SD5033	Drive
M647C00271	SB5005	Sta. Brush set
M647C00272	SB5004	Sta. Brush set

MITSUBISHI	AS	PRODUCT
M647C00371	SB5004	Sta. Brush set
M647C00372	SB5004	Sta. Brush set
M647C00571	SB5005	Sta. Brush set
M647C00573	SB5005	Sta. Brush set
M647C00671	SB5004	Sta. Brush set
M647X02971	SB5005	Sta. Brush set
M647X03971	SB5006	Sta. Brush set
M647X04571	SB5006	Sta. Brush set
M647X05971	SB5006	Sta. Brush set
M648C10371	SB5007	Sta. Brush set
M648C13770	SB5007	Sta. Brush set
M648C14870	SB5001	Sta. Brush set
M648C14871	SB5001	Sta. Brush set
M648C14970	SB5001	Sta. Brush set
M648C14971	SB5001	Sta. Brush set
M648C15070	SB5001	Sta. Brush set
M648C15372	SB5002	Sta. Brush set
M648C15372/472	SB5002	Sta. Brush set
M648C15472	SB5002	Sta. Brush set
M648C16970	SB5001	Sta. Brush set
M648C16971	SB5001	Sta. Brush set
M648C20371	SB5011	Sta. Brush set
M648C24471	SB5011	Sta. Brush set
M648C24471/472	SB5011	Sta. Brush set
M648C24472	SB5011	Sta. Brush set
M648C25271	SB5008	Sta. Brush set
M648C25273	SB5008	Sta. Brush set
M648C26371	SB5002	Sta. Brush set
M648C28671	SB5002	Sta. Brush set
M648D20771	SB5011	Sta. Brush set
M648X28271	SB5002	Sta. Brush set
M649C32370	SBU9030	Bushing
M649T01271	SBH5001	S. Brush holder
M649T01272	SBH5001	S. Brush holder
M649T01273	SBH5001	S. Brush holder
M649T01371	SBH5007	S. Brush holder
M649T01471	SBH5005	S. Brush holder
M649T01671	SBH5002	S. Brush holder
M649T02271	SBH5007	S. Brush holder
M649T02272	SBH5007	S. Brush holder
M649T02471	SBH5005	S. Brush holder
M649T04471	SBH5005	S. Brush holder
M649T04871	SBH5007	S. Brush holder
M649T05071	SBH5006	S. Brush holder
M649T05072	SBH5006	S. Brush holder
M649T06871	SBH5001	S. Brush holder
M649T06971	SBH5002	S. Brush holder
M649T09371	SBH5001	S. Brush holder
M649T09471	SBH5001	S. Brush holder
M649T20471	SBH5004	S. Brush holder
M649X01371	SBH5007	S. Brush holder
M649X04473	SBH5005	S. Brush holder
M649X20171	SBH5005	S. Brush holder
M649X20471	SBH5004	S. Brush holder
M7T03774	S1006	Starter
M7T03777	S1006	Starter
M800T35171	SF5005	Starter field coil
M800T43571	SF5002	Starter field coil
M800T43972	SF5005	Starter field coil
M800T46371	SF5003	Starter field coil
M800T47371	SF5002	Starter field coil

MITSUBISHI	AS	PRODUCT
M800X43573	SF5002	Starter field coil
M800X43574	SF5002	Starter field coil
M800X49671	SF5005	Starter field coil
M800X70772	SF5004	Starter field coil
M800X70787	SF5004	Starter field coil
M806X06971	SA5011	Starter armature
M8T70371	S5004	Starter
M8T71471	S5032	Starter
M8T71471ZE	S5032	Starter
M8T71571	S5004	Starter
M8T75071	S5007	Starter
M8T75071A	S5007	Starter
M8T75073	S5007	Starter
M8T75073A	S5007	Starter
M8T75074	S5007	Starter
M8T75171	S5004	Starter
M8T80071	S5011	Starter
M8T80071A	S5011	Starter
M8T80071B	S5011	Starter
M8T80871A	S5011	Starter
M8T80871B	S5011	Starter
M8T85071	S5011	Starter
M8T85071B	S5011	Starter
M8T87171	S5041	Starter
M9T60371	S5022	Starter
M9T60372	S5022	Starter
M9T60471	S5027	Starter
M9T60671	S5055	Starter
M9T60672	S5055	Starter
M9T61171	S5028	Starter
M9T62173	S5028	Starter
M9T70173	S1018	Starter
M9T80071	S5030	Starter
M9T80271	S3034	Starter
M9T80472	S1017	Starter
M9T80473	S5049	Starter
M9T83671	S5049	Starter
MD001333	S5002	Starter
MD001555	S5002	Starter
MD013742	A5030R	Alternator
MD016920	S6017	Starter
MD016921	S5002	Starter
MD021674	S5002	Starter
MD021678	S5002	Starter
MD027400	S5002	Starter
MD027401	S5002	Starter
MD034120	S5002	Starter
MD034121	S5002	Starter
MD050205	S5005	Starter
MD061154	S5005	Starter
MD066761	S5002	Starter
MD069166	S5005	Starter
MD070934	S5005	Starter
MD072654	S5006	Starter
MD081567	S5002	Starter
MD081568	S5002	Starter
MD085874	A5030R	Alternator
MD087246	A5030R	Alternator
MD095865	S5006	Starter
MD099667	S5020	Starter
MD100431	S5002	Starter
MD103373	A5006	Alternator
MD103564	A5006	Alternator
MD106319	A5006	Alternator
MD106320	A5006	Alternator
MD107615	S5002	Starter
MD111932	A5012	Alternator
MD112625	S5019	Starter
MD112628	S5019	Starter
MD124233	A5006	Alternator
MD136933	S5019	Starter
MD140189	A5018	Alternator
MD140190	S5046	Starter
MD141119	A5012	Alternator
MD147245	A5018	Alternator
MD149750	A5027	Alternator
MD149751	A5011	Alternator
MD153357	A5027	Alternator
MD153843	A5027	Alternator
MD156986	S5005	Starter
MD156989	S5006	Starter
MD160671	A5014	Alternator
MD161437	S5002	Starter
MD162836	S5002	Starter
MD162837	S5002	Starter
MD162839	S5020	Starter
MD162842	S5019	Starter
MD162964	A5004	Alternator
MD162975	S5005	Starter
MD164975	S5005	Starter
MD164976	S5046	Starter
MD164977	S5006	Starter
MD168988	A5011	Alternator
MD168989	A5011	Alternator
MD171228	S5021	Starter
MD171502	S5021	Starter
MD172860	S5020	Starter
MD172863	S5019	Starter
MD180238	S5002	Starter
MD191433	S5005	Starter
MD191435	S5005	Starter
MD200695	A5017	Alternator
MD230359	A5003	Alternator
MD304129	A5001	Alternator
MD306648	A5001	Alternator
MD306649	A5008	Alternator
MD308088	S3013	Starter
MD309471	S5019	Starter
MD313327	S5019	Starter
MD313395	A5016	Alternator
MD313939	A5008	Alternator
MD314167	S5026	Starter
MD315547	S5026	Starter
MD315548	S5026	Starter
MD316001	S5002	Starter
MD317119	A5016	Alternator
MD317860	A5010	Alternator
MD317862	A5010	Alternator
MD318086	S5021	Starter
MD320354	A5003	Alternator
MD320618	S5021	Starter
MD329260	S3001	Starter
MD331137	S5026	Starter
MD332022	S5033	Starter
MD340419	A5025	Alternator
MD343562	A5010	Alternator
MD344183	S5026	Starter
MD350608	A5016	Alternator
MD356104	S5033	Starter
MD360368	S5033	Starter
MD366050	A5008	Alternator
MD366052	A5025	Alternator
MD368519	A5010	Alternator
MD602052	SD5001	Drive
MD602074	SS5001	Starter solenoid
MD602250	SA5001	Starter armature
MD602457	AB5001	Alt. Brush set
MD602458	AB5001	Alt. Brush set
MD602468	SB5007	Sta. Brush set
MD602470	SB5007	Sta. Brush set
MD602678	SD5001	Drive
MD602679	SD5001	Drive
MD602783	AB5003	Alt. Brush set
MD602879	SS5001	Starter solenoid
MD604018	AB6001	Alt. Brush set
MD604047	SD6013	Drive
MD604062	SBU9032	Bushing
MD604589	ARE6028	Regulator
MD604751	ARE6028	Regulator
MD607283	SD5002	Drive
MD607370	ARC5020	Rectifier
MD607372	ARE5001	Regulator
MD607373	AB5003	Alt. Brush set
MD607389	SB5007	Sta. Brush set
MD607413	SA5006	Starter armature
MD607420	SBH5005	S. Brush holder
MD607434	SS5033	Starter solenoid
MD607441	ARC5020	Rectifier
MD607448	SS5010	Starter solenoid
MD607457	SD5031	Drive
MD607540	SBH5005	S. Brush holder
MD607549	SS5001	Starter solenoid
MD607552	SA5001	Starter armature
MD607554	SB5001	Sta. Brush set
MD607555	SBH5007	S. Brush holder
MD607556	SB5001	Sta. Brush set
MD607568	ARC5017	Rectifier
MD607570	ARE5001	Regulator
MD607616	ARC5016	Rectifier
MD607619	ARE5002	Regulator
MD607634	SS5016	Starter solenoid
MD607636	SA5004	Starter armature
MD607637	ABE9020	Bearing
MD607642	SD5031	Drive
MD607680	ARC5025	Rectifier
MD607693	ARC5022	Rectifier
MD607828	ARC5002	Rectifier
MD607894	SD5004	Drive
MD607903	SBU9030	Bushing
MD607917	ARC5053	Rectifier
MD607924	SA5009	Starter armature
MD607926	SBH5007	S. Brush holder
MD607997	SS5005	Starter solenoid
MD608273	SD5002	Drive
MD611032	ARE5004	Regulator
MD611035	AB5007	Alt. Brush set

MITSUBISHI	AS	PRODUCT
MD611146	ARE5004	Regulator
MD611150	ABE9012	Bearing
MD611204	SA5011	Starter armature
MD611211	SD5005	Drive
MD611247	ABE9005	Bearing
MD611254	ARC5003	Rectifier
MD611256	ARC5053	Rectifier
MD611307	ARC5007	Rectifier
MD611343	ABE9005	Bearing
MD611372	SD5004	Drive
MD611416	AS5001	Stator
MD611422	AS5001	Stator
MD611432	ARE5005	Regulator
MD611437	AS5001	Stator
MD611479	ARC5011	Rectifier
MD611481	ARE5006	Regulator
MD611509	AS5001	Stator
MD611517	AS5001	Stator
MD611564	ARC5038	Rectifier
MD611565	ARE5005	Regulator
MD611566	AB5007	Alt. Brush set
MD611586	ARC5031	Rectifier
MD611588	ARE5005	Regulator
MD611591	SS5003	Starter solenoid
MD611599	ARC5041	Rectifier
MD611668	ARE5006	Regulator
MD611688	ARC5008	Rectifier
MD611689	AB5006	Alt. Brush set
MD611710	ARE5005	Regulator
MD611731	SB5005	Sta. Brush set
MD611742	ARC5041	Rectifier
MD611768	ARC5038	Rectifier
MD611776	ARC5008	Rectifier
MD611778	ARC5008	Rectifier
MD611918	SBH5001	S. Brush holder
MD618179	ABE9032	Bearing
MD618207	ARE5004	Regulator
MD618209	AS5004	Stator
MD618302	ARE5002	Regulator
MD618334	SBU9050	Bushing
MD618369	SA5004	Starter armature
MD618422	ARC5040	Rectifier
MD618443	SA5009	Starter armature
MD618451	SA5011	Starter armature
MD618460	SB5002	Sta. Brush set
MD618509	SS5014	Starter solenoid
MD618513	SBH5007	S. Brush holder
MD618543	SS5002	Starter solenoid
MD618568	ARC5035	Rectifier
MD618569	ARE5020	Regulator
MD618570	AB5009	Alt. Brush set
MD618574	AS5002	Stator
MD618581	SS5005	Starter solenoid
MD618613	SS5005	Starter solenoid
MD618657	AS5004	Stator
MD618689	AB5009	Alt. Brush set
MD618696	ARE5020	Regulator
MD618730	AR5001	Rotor
MD618732	AS5002	Stator
MD618734	ARC5036	Rectifier
MD618735	ARE5010	Regulator
MD618752	ARC5034	Rectifier
MD618815	AB5009	Alt. Brush set
MD618845	ARE5025	Regulator
MD618851	AB5009	Alt. Brush set
MD618957	ARE5021	Regulator
MD618958	SA5012	Starter armature
MD618963	SD5023	Drive
MD619101	SS5017	Starter solenoid
MD619164	SA5013	Starter armature
MD619167	ARE5010	Regulator
MD619204	SD5034	Drive
MD619268	ARE5035	Regulator
MD619284	ARC5061	Rectifier
MD701446	SA5015	Starter armature
ME007578	A5007	Alternator
ME012665	S5011	Starter
ME012994	S5011	Starter
ME012995	S5011	Starter
ME013008	S5011	Starter
ME014418	S5011	Starter
ME017034	S5008	Starter
ME017035	S5008	Starter
ME017036	S5008	Starter
ME017056	S5008	Starter
ME017061	S5008	Starter
ME017085	S5008	Starter
ME017089	S5008	Starter
ME017092	S5011	Starter
ME017552	A5007	Alternator
ME017560	A5007	Alternator
ME017561	A5007	Alternator
ME017600	A5005	Alternator
ME017646	S5011	Starter
ME049303	S5041	Starter
ME057200	S5047	Starter
ME057350	S5047	Starter
ME057845	S5047	Starter
ME057985	S5047	Starter
ME057990	S5047	Starter
ME087507	S5051	Starter
ME087589	S5051	Starter
ME087590	S5051	Starter
ME088390	S5051	Starter
ME110JA	S5014	Starter
ME200695	A5017	Alternator
ME201650	S5007	Starter
ME201650A	S5007	Starter
ME201745	A5017	Alternator
ME201837	A5017	Alternator
ME202424	S5007	Starter
ME202755	A5017	Alternator
ME202970	S5007	Starter
ME204424	S5007	Starter
ME204424A	S5007	Starter
ME204425	S5007	Starter
ME204425B	S5007	Starter
ME221165	A5032	Alternator
ME255AA	S5047	Starter
ME57845	S5047	Starter
ME57985	S5047	Starter
ME700035	SS5013	Starter solenoid
ME700037	SA5002	Starter armature
ME700042	SD5037	Drive
ME700119	SS5007	Starter solenoid
ME700121	SD5027	Drive
ME700135	SS5007	Starter solenoid
ME700140	SB5002	Sta. Brush set
ME700316	SS5007	Starter solenoid
ME700549	ABE9006	Bearing
ME700555	ARC5019	Rectifier
ME700594	ABE9005	Bearing
ME700635	ARE5003	Regulator
ME700636	ARC5025	Rectifier
ME700746	ABE9005	Bearing
ME700854	SA5014	Starter armature
ME700972	SD5026	Drive
ME700984	SS5007	Starter solenoid
ME700992	SF5003	Starter field coil
ME701256	ABE9005	Bearing
ME701290	SS5013	Starter solenoid
ME701302	ARE5039	Regulator
ME701363	ARE5017	Regulator
ME701399	ARE5009	Regulator
ME701439	ARC5047	Rectifier
ME701467	SBH5004	S. Brush holder
ME701492	SA5015	Starter armature
ME701569	ARC5047	Rectifier
MG112014	S5020	Starter
MG122404	S6002	Starter
MM115516	S5021	Starter
MM115517	S5021	Starter
MM115518	S5021	Starter
MM115519	S5021	Starter
MM409412	S5021	Starter
MM502117	SS5006	Starter solenoid
MM502135	SB5011	Sta. Brush set
MM502377	AB5005	Alt. Brush set
MM502461	SS5033	Starter solenoid
MM502465	SS5033	Starter solenoid
MM502531	SD5024	Drive
MM502532	ARE5004	Regulator
MN137867	A5008	Alternator
MP112040	S5020	Starter
MR994325	S5033	Starter
MW30620657	S3058R	Starter
PW501783	S5002	Starter
S5930R63070	ABE9028	Bearing
S930P12070	ABE9010	Bearing
S930P12170	ABE9020	Bearing
S930P12301	ABE9021	Bearing
S930P12370	ABE9021	Bearing
S930P13770	ABE9006	Bearing
S930P14101	ABE9019	Bearing
S930P14201	ABE9010	Bearing
S930P14301	ABE9020	Bearing
S930P17170	ABE9011	Bearing
S930P17901	ABE9012	Bearing
S930P17970	ABE9012	Bearing
S930P18301	ABE9030	Bearing
S930P18370	ABE9030	Bearing
S930P18501	ABE9014	Bearing
S930P18570	ABE9014	Bearing
S930P18870	ABE9006	Bearing
S930P21770	ABE9003	Bearing
S930P25470	ABE9002	Bearing

MITSUBISHI	AS	PRODUCT
S930P25570	ABE9003	Bearing
S930P25670	ABE9004	Bearing
S930P26470	ABE9002	Bearing
S930P28001	ABE9002	Bearing
S930P28070	ABE9002	Bearing
S930P28301	ABE9038	Bearing
S930P28370	ABE9038	Bearing
S930P31070	ABE9006	Bearing
S930P31071	ABE9006	Bearing
S930P31170	ABE9028	Bearing
S930P33970	ABE9006	Bearing
S930P34070	ABE9040(NSK)	Bearing
S930P35570	ABE9005	Bearing
S930P36070	ABE9005	Bearing
S930P37301	ABE9006	Bearing
S930P60570	ABE9002	Bearing
S930P61312	ABE9005	Bearing
S930P61370	ABE9005	Bearing
S930P61401	ABE9003	Bearing
S930P61770	ABE9003	Bearing
S930P61901	ABE9005	Bearing
S930P62070	ABE9010	Bearing
S930P62670	ABE9005	Bearing
S930P63012	ABE9028	Bearing
S930P63070	ABE9028	Bearing
S930P63605	ABE9027	Bearing
S930P63670	ABE9027	Bearing
S930P64301	ABE9030	Bearing
S930P64370	ABE9030	Bearing
S930P64570	ABE9032	Bearing
S930P65170	ABE9028	Bearing
S930P65270	ABE9028	Bearing
S930P80770	ABE9003	Bearing
S933P63670	ABE9027	Bearing
SC0081LHIA	ABE9032	Bearing
for CA1780IR	AP5001	Pulley

MOBILETRON	AS	PRODUCT
CF-46	IC9003	Ignition Coil
DD-1012	ARD9036	Diode
DD-1013	ARD9035	Diode
DD-1014	ARD9038	Diode
DD-1015	ARD9037	Diode
IG-D1910H	IM0001	Ignition Module
IG-D1961N	IM1001	Ignition Module
IG-D1978	IM1002	Ignition Module
IG-D1979	IM1002	Ignition Module
IG-D1980HV	IM1002	Ignition Module
IG-FT001H	IM4001	Ignition Module
IG-H012	IM0003	Ignition Module
IG-M014	IM5001	Ignition Module
MFRX05282	ARC6021	Rectifier
MFRX05622	ARC4018	Rectifier
MFVR02240	ARE6036	Regulator
RB-01A	ARC0003	Rectifier
RB-01HA	ARC0003	Rectifier
RB-02	ARC0004	Rectifier
RB-02H	ARC0004	Rectifier
RB-03A	ARC0002	Rectifier
RB-03HA	ARC0002	Rectifier
RB-04	ARC0005	Rectifier
RB-04H	ARC0005	Rectifier

MOBILETRON	AS	PRODUCT
RB-05	ARC0009	Rectifier
RB-05H	ARC0009	Rectifier
RB-06A	ARC0037	Rectifier
RB-06HA	ARC0037	Rectifier
RB-07H	ARC0007	Rectifier
RB-08H	ARC0006	Rectifier
RB-13H	ARC0061	Rectifier
RB-14H	ARC0008	Rectifier
RB-15	ARC0010	Rectifier
RB-15H	ARC0010	Rectifier
RB-16	ARC0001	Rectifier
RB-16H	ARC0001	Rectifier
RB-17	ARC0011	Rectifier
RB-17H	ARC0011	Rectifier
RB-18H	ARC0063	Rectifier
RB-19	ARC0012	Rectifier
RB-19H	ARC0012	Rectifier
RB-38H	ARC0062	Rectifier
RB-51H	ARC0019	Rectifier
RB-52H	ARC0020	Rectifier
RB-53H	ARC0020	Rectifier
RB-54H	ARC0021	Rectifier
RB-55H	ARC0022	Rectifier
RB-56H	ARC0023	Rectifier
RB-63H	ARC0024	Rectifier
RB-64H	ARC0032	Rectifier
RB-66H	ARC0035	Rectifier
RB-67H	ARC0034	Rectifier
RB-72H	ARC0016	Rectifier
RB-74H	ARC0032	Rectifier
RB-75H	ARC0015	Rectifier
RB-76H	ARC0018	Rectifier
RB-77H	ARC0028	Rectifier
RB-78H	ARC0038	Rectifier
RB-929H	ARC0065	Rectifier
RD-04B	ARC1002	Rectifier
RD-06	ARC1014	Rectifier
RD-07	ARC1015	Rectifier
RD-09	ARC1007	Rectifier
RD-09H	ARC1007	Rectifier
RD-12H	ARC1010	Rectifier
RD-17	ARC1012	Rectifier
RD-17H	ARC1012	Rectifier
RD-18	ARC1025	Rectifier
RD-95A	ARC1005	Rectifier
RD-97A	ARC1006	Rectifier
RF-01	ARC9009	Rectifier
RF-02	ARC9009	Rectifier
RF-04A	ARC9010	Rectifier
RF-05A	ARC9011	Rectifier
RF-07	ARC9002	Rectifier
RF-08	ARC9002	Rectifier
RF-09	ARC9005	Rectifier
RF-10	ARC9013	Rectifier
RF-12	ARC9015	Rectifier
RH-01	ARC2001	Rectifier
RH-01C	ARC2001	Rectifier
RH-02	ARC2002	Rectifier
RH-02C	ARC2002	Rectifier
RH-03	ARC2005	Rectifier
RH-03C	ARC2005	Rectifier

MOBILETRON	AS	PRODUCT
RH-04	ARC2011	Rectifier
RH-04C	ARC2011	Rectifier
RH-05C	ARC2023	Rectifier
RH-06	ARC2006	Rectifier
RH-06C	ARC2006	Rectifier
RH-07	ARC2007	Rectifier
RH-07C	ARC2007	Rectifier
RH-10	ARC2005	Rectifier
RH-10C	ARC2005	Rectifier
RH-11	ARC2001	Rectifier
RH-11C	ARC2001	Rectifier
RH-12	ARC2001	Rectifier
RH-12C	ARC2001	Rectifier
RH-13	ARC2001	Rectifier
RH-13C	ARC2001	Rectifier
RH-14	ARC2004	Rectifier
RH-14C	ARC2004	Rectifier
RH-15	ARC2009	Rectifier
RH-15C	ARC2009	Rectifier
RH-17C	ARC2013	Rectifier
RH-19C	ARC2014	Rectifier
RH-20C	ARC2015	Rectifier
RH-21	ARC2024	Rectifier
RH-22	ARC2017	Rectifier
RH-24	ARC2031	Rectifier
RH-26	ARC2019	Rectifier
RH-31	ARC2021	Rectifier
RH-41	ARC2025	Rectifier
RH-42	ARC2026	Rectifier
RH-60	ARC2027	Rectifier
RH-65	ARC2032	Rectifier
RH-68	ARC2020	Rectifier
RH16C	ARC2012	Rectifier
RH48	ARC2016	Rectifier
RI-01	ARC4023	Rectifier
RI-01H	ARC4023	Rectifier
RI-02	ARC4008	Rectifier
RI-02H	ARC4008	Rectifier
RI-16H	ARC4011	Rectifier
RI-18H	ARC4015	Rectifier
RI-19H	ARC4007	Rectifier
RI-20H	ARC4013	Rectifier
RI-34	ARC4022	Rectifier
RI-35	ARC4018	Rectifier
RL-01	ARC4002	Rectifier
RL-01H	ARC4002	Rectifier
RL-06	ARC4005	Rectifier
RL-06H	ARC4005	Rectifier
RL-08	ARC4010	Rectifier
RL-08H	ARC4010	Rectifier
RL-09	ARC4004	Rectifier
RL-09H	ARC4004	Rectifier
RL-10H	ARC4006	Rectifier
RL-11H	ARC4003	Rectifier
RL-22H	ARC4011	Rectifier
RM-01	ARC5002	Rectifier
RM-03	ARC5001	Rectifier
RM-04	ARC5003	Rectifier
RM-07	ARC5053	Rectifier
RM-09	ARC5006	Rectifier
RM-10	ARC5008	Rectifier

MOBILETRON	AS	PRODUCT
RM-11	ARC5007	Rectifier
RM-12	ARC5054	Rectifier
RM-13	ARC5007	Rectifier
RM-14	ARC5055	Rectifier
RM-15	ARC5002	Rectifier
RM-16	ARC5012	Rectifier
RM-17	ARC5056	Rectifier
RM-19	ARC5007	Rectifier
RM-20	ARC5011	Rectifier
RM-22	ARC5009	Rectifier
RM-24	ARC5013	Rectifier
RM-29	ARC5021	Rectifier
RM-30	ARC5023	Rectifier
RM-31	ARC5024	Rectifier
RM-32	ARC5029	Rectifier
RM-34	ARC5031	Rectifier
RM-36	ARC5032	Rectifier
RM-38	ARC5027	Rectifier
RM-40	ARC5038	Rectifier
RM-41	ARC5037	Rectifier
RM-42	ARC5039	Rectifier
RM-43	ARC5041	Rectifier
RM-44	ARC5058	Rectifier
RM-45	ARC5045	Rectifier
RM-46	ARC5044	Rectifier
RM-47	ARC5043	Rectifier
RM-48	ARC5059	Rectifier
RM-49	ARC5046	Rectifier
RM-50	ARC5034	Rectifier
RM-51	ARC5026	Rectifier
RM-54	ARC5043	Rectifier
RM-58	ARC5048	Rectifier
RM-65	ARC5016	Rectifier
RM-66	ARC5017	Rectifier
RM-67	ARC5018	Rectifier
RM-68	ARC5020	Rectifier
RM-70	ARC5022	Rectifier
RM-73	ARC5025	Rectifier
RM-83	ARC5022	Rectifier
RM-85	ARC5015	Rectifier
RM-86	ARC5019	Rectifier
RM-99HV	ARC5042	Rectifier
RN-02	ARC6010	Rectifier
RN-04	ARC6018	Rectifier
RN-05	ARC6006	Rectifier
RN-08	ARC6013	Rectifier
RN-10	ARC6017	Rectifier
RN-11	ARC6014	Rectifier
RN-12	ARC6001	Rectifier
RN-13	ARC6005	Rectifier
RN-15	ARC6023	Rectifier
RN-16	ARC6008	Rectifier
RN-18	ARC6004	Rectifier
RN-29	ARC6021	Rectifier
RN-34	ARC6024	Rectifier
RN-37	ARC6019	Rectifier
RN-39	ARC6020	Rectifier
RP-01	ARC3001	Rectifier
RP-02	ARC3007	Rectifier
RP-03	ARC3002	Rectifier
RP-04	ARC3003	Rectifier
RP-04H	ARC3005	Rectifier
RP-04R	ARC3025	Rectifier
RP-05H	ARC3008	Rectifier
RP-06H	ARC3019	Rectifier
RP-06HR	ARC3019	Rectifier
RP-07	ARC3004	Rectifier
RP-08	ARC3017	Rectifier
RP-09	ARC3009	Rectifier
RP-09R	ARC3009	Rectifier
RP-13	ARC3035	Rectifier
RP-14	ARC3011	Rectifier
RP-17	ARC3012	Rectifier
RP-18	ARC3013	Rectifier
RP-20	ARC3022	Rectifier
RP-21	ARC3022	Rectifier
RP-22	ARC3016	Rectifier
RP-23	ARC3018	Rectifier
RP-28	ARC3028	Rectifier
RT-10H	ARC3020	Rectifier
RT-13H	ARC3036	Rectifier
VR-B103	ARE0072	Regulator
VR-B192	ARE0001	Regulator
VR-B193N	ARE9007	Regulator
VR-B195M	ARE0002	Regulator
VR-B195N	ARE0002	Regulator
VR-B196M	ARE0004	Regulator
VR-B196MH	ARE0003	Regulator
VR-B196N	ARE0004	Regulator
VR-B196NH	ARE0003	Regulator
VR-B197	ARE0015	Regulator
VR-B198	ARE0027	Regulator
VR-B201	ARE0007	Regulator
VR-B201H	ARE0007	Regulator
VR-B202	ARE0021	Regulator
VR-B203	ARE0005	Regulator
VR-B206	ARE0032	Regulator
VR-B207	ARE0037	Regulator
VR-B209	ARE0022	Regulator
VR-B210	ARE0023	Regulator
VR-B219	ARE0035	Regulator
VR-B220	ARE0031	Regulator
VR-B883	ARE0066	Regulator
VR-D424	ARE1008	Regulator
VR-D432	ARE1017	Regulator
VR-D668	ARE1001	Regulator
VR-D668C	ARE1001	Regulator
VR-D672	ARE1002	Regulator
VR-D672C	ARE1002	Regulator
VR-D673	ARE1010	Regulator
VR-D673C	ARE1010	Regulator
VR-D674	ARE1009	Regulator
VR-D674H	ARE1009	Regulator
VR-D675F	ARE1007	Regulator
VR-D678F	ARE1013	Regulator
VR-D681F	ARE1014	Regulator
VR-D683F	ARE1016	Regulator
VR-D687	ARE1002	Regulator
VR-D694F	ARE1003	Regulator
VR-D701	ARE1005	Regulator
VR-D702F	ARE1004	Regulator
VR-D703F	ARE1019	Regulator
VR-D740	ARE1025	Regulator
VR-DU511	ARE3018	Regulator
VR-F114A	ARE4009	Regulator
VR-F118	ARE4007	Regulator
VR-F119	ARE4003	Regulator
VR-F119B	ARE4006	Regulator
VR-F121T	ARE4008	Regulator
VR-F151	ARE4004	Regulator
VR-F151A	ARE4004	Regulator
VR-F153	ARE4005	Regulator
VR-F153A	ARE4005	Regulator
VR-F157	ARE4014	Regulator
VR-F784H	ARE9003	Regulator
VR-F784M	ARE9003	Regulator
VR-F786H	ARE9005	Regulator
VR-F786M	ARE9005	Regulator
VR-F811	ARE9004	Regulator
VR-F814	ARE9012	Regulator
VR-F815	ARE9013	Regulator
VR-F817	ARE9014	Regulator
VR-F818	ARE9010	Regulator
VR-F900	ARE9015	Regulator
VR-F920	ARE9016	Regulator
VR-F930	ARE9017	Regulator
VR-F931	ARE9034	Regulator
VR-H2000-1	ARE2002	Regulator
VR-H2000-11	ARE2027	Regulator
VR-H2000-14	ARE2014	Regulator
VR-H2000-15	ARE2021	Regulator
VR-H2000-16	ARE2015	Regulator
VR-H2000-17	ARE2013	Regulator
VR-H2000-18	ARE2022	Regulator
VR-H2000-1H	ARE2002	Regulator
VR-H2000-1L	ARE2002	Regulator
VR-H2000-20	ARE2023	Regulator
VR-H2000-28	ARE2011	Regulator
VR-H2000-29	ARE2004	Regulator
VR-H2000-29B	ARE2005	Regulator
VR-H2000-3	ARE2003	Regulator
VR-H2000-30	ARE2001	Regulator
VR-H2000-31	ARE2002	Regulator
VR-H2000-32	ARE2002	Regulator
VR-H2000-3A	ARE2005	Regulator
VR-H2000-4	ARE2029	Regulator
VR-H2000-40	ARE2006	Regulator
VR-H2000-43	ARE2026	Regulator
VR-H2000-44	ARE2025	Regulator
VR-H2000-4H	ARE2029	Regulator
VR-H2000-5	ARE2012	Regulator
VR-H2000-5H	ARE2012	Regulator
VR-H2000-6	ARE2028	Regulator
VR-H2000-6H	ARE2028	Regulator
VR-H2000-7	ARE2020	Regulator
VR-H2000-7H	ARE2020	Regulator
VR-H20009-45	ARE5034	Regulator
VR-H2005-10	ARE6011	Regulator
VR-H2005-11	ARE6003	Regulator
VR-H2005-14H	ARE6007	Regulator
VR-H2005-15	ARE6028	Regulator
VR-H2005-17DG	ARE6020	Regulator
VR-H2005-19DG	ARE6023	Regulator

MOBILETRON	AS	PRODUCT
VR-H2005-2	ARE6017	Regulator
VR-H2005-23DG	ARE6008	Regulator
VR-H2005-24	ARE6009	Regulator
VR-H2005-26	ARE6019	Regulator
VR-H2005-30DG	ARE6013	Regulator
VR-H2005-31DG	ARE6002	Regulator
VR-H2005-32DG	ARE6031	Regulator
VR-H2005-33DG	ARE6012	Regulator
VR-H2005-35	ARE6025	Regulator
VR-H2005-36DG	ARE6014	Regulator
VR-H2005-39	ARE6028	Regulator
VR-H2005-4	ARE6001	Regulator
VR-H2005-40	ARE6015	Regulator
VR-H2005-46DG	ARE6002	Regulator
VR-H2005-4DG	ARE6001	Regulator
VR-H2005-5	ARE6004	Regulator
VR-H2005-54	ARE6030	Regulator
VR-H2005-58	ARE6021	Regulator
VR-H2005-59	ARE6032	Regulator
VR-H2005-5H	ARE6004	Regulator
VR-H2005-6	ARE6018	Regulator
VR-H2005-60	ARE6030	Regulator
VR-H2005-62A	ARE6036	Regulator
VR-H2005-64A	ARE6027	Regulator
VR-H2005-65	ARE6034	Regulator
VR-H2005-6H	ARE6018	Regulator
VR-H2005-8	ARE6005	Regulator
VR-H2005-83	ARE6037	Regulator
VR-H2005-85	ARE6039	Regulator
VR-H2005-88	ARE6040	Regulator
VR-H2005-9	ARE6006	Regulator
VR-H2005-90	ARE6047	Regulator
VR-H2005-96	ARE6038	Regulator
VR-H2005-99	ARE6048	Regulator
VR-H200514	ARE6007	Regulator
VR-H2009	ARE5001	Regulator
VR-H2009-100	ARE5042	Regulator
VR-H2009-105	ARE5051	Regulator
VR-H2009-108	ARE5020	Regulator
VR-H2009-10H	ARE5027	Regulator
VR-H2009-10N	ARE5027	Regulator
VR-H2009-114	ARE5054	Regulator
VR-H2009-11H	ARE5028	Regulator
VR-H2009-132B	ARE5056	Regulator
VR-H2009-135B	ARE5057	Regulator
VR-H2009-16	ARE5014	Regulator
VR-H2009-18	ARE5002	Regulator
VR-H2009-22	ARE5008	Regulator
VR-H2009-23	ARE5029	Regulator
VR-H2009-26	ARE5015	Regulator
VR-H2009-27	ARE5026	Regulator
VR-H2009-28	ARE5006	Regulator
VR-H2009-30	ARE5016	Regulator
VR-H2009-33	ARE5018	Regulator
VR-H2009-38	ARE5020	Regulator
VR-H2009-47	ARE5003	Regulator
VR-H2009-49	ARE5012	Regulator
VR-H2009-58	ARE5041	Regulator
VR-H2009-59	ARE5024	Regulator
VR-H2009-63	ARE5025	Regulator
VR-H2009-6H	ARE5005	Regulator

MOBILETRON	AS	PRODUCT
VR-H2009-70	ARE5035	Regulator
VR-H2009-71	ARE5022	Regulator
VR-H2009-77	ARE5039	Regulator
VR-H2009-79	ARE5017	Regulator
VR-H2009-7H	ARE5011	Regulator
VR-H2009-80	ARE5010	Regulator
VR-H2009-86	ARE9006	Regulator
VR-H2009-94	ARE5047	Regulator
VR-H2009-98	ARE5055	Regulator
VR-IK019	ARE9007	Regulator
VR-IK149	ARE9008	Regulator
VR-LC111	ARE4001	Regulator
VR-LC111B	ARE4002	Regulator
VR-LD160	ARE9001	Regulator
VR-MD06	ARE5044	Regulator
VR-MP134	ARE9018	Regulator
VR-PR126	ARE3011	Regulator
VR-PR135B	ARE3013	Regulator
VR-PR1652H	ARE3004	Regulator
VR-PR1654	ARE3004	Regulator
VR-PR1667	ARE3005	Regulator
VR-PR1668	ARE3009	Regulator
VR-PR1669	ARE3006	Regulator
VR-PR1925H	ARE3003	Regulator
VR-PR1926	ARE3014	Regulator
VR-PR2292	ARE3010	Regulator
VR-PR2925	ARE3003	Regulator
VR-PR3534	ARE3027	Regulator
VR-PR6366	ARE3036	Regulator
VR-VN001	ARE9026	Regulator
VR-VN002	ARE9035	Regulator
VR-VW002	ARE3017	Regulator
VR-VW005	ARE3001	Regulator
VR-VW005N	ARE3001	Regulator
VR-VW009	ARE3053	Regulator
VR-VW010	ARE3002	Regulator
VR-YH1925	ARE3003	Regulator
VR-YL126	ARE3011	Regulator
VR-YL1652	ARE3004	Regulator

MONARK	AS	PRODUCT
081165106	S0039	Starter
081251007	S0078	Starter
081467026	S0060	Starter
081495002	S1015	Starter
081768131	A0029	Alternator
081768135	A0008	Alternator
081768143	A0011	Alternator
081769148	A0011	Alternator
081769686	A0001	Alternator
085881000	SBR0005	Starter bracket
087065805	SRS0003	Repair set
093231050	ARC9023	Rectifier
337004	S0067	Starter
523037	S0002	Starter
81360038	S0197	Starter
81366062	S0023	Starter
81368001	S0041	Starter
81368024	S0002	Starter
81380038	S0197	Starter
81382305	S9044	Starter
81387004	S9044	Starter

MONARK	AS	PRODUCT
81387034	S0067	Starter
81388001	S0068	Starter
81388010	S0197	Starter
81388024	S0002	Starter
81388081	S0041	Starter
81388309	S0002	Starter
81388310	S0040	Starter
81391004	S0097	Starter
81391006	S0024	Starter
81392005	S0071	Starter
81392006	S0024	Starter
81456002	S0001	Starter
81466002	S0001	Starter
81466003	S0216	Starter
81466005	S0063	Starter
81466008	S0003	Starter
81466009	S0216	Starter
81466023	S0001	Starter
81466036	S0011	Starter
81466051	S0001	Starter
81466052	S0221(BOSCH)R	Starter
81466062	S0023	Starter
81467001	S0003	Starter
81467007	S0008	Starter
81467023	S0009	Starter
81467042	S0065	Starter
81467043	S0065	Starter
81467045	S0220(BOSCH)R	Starter
81467053	S0022	Starter
81467065	S0021	Starter
81467153	S0022	Starter
81468009	S0216	Starter

MOTOCRAFT	AS	PRODUCT
GL346	ARE9010	Regulator
GL347	ARE9010	Regulator
GR784	ARE9003	Regulator
GR784A	ARE9003	Regulator
GR784B	ARE9003	Regulator
GR801	ARE9005	Regulator
GR811	ARE9004	Regulator
GR814	ARE9012	Regulator
GR815	ARE9013	Regulator
GR817	ARE9014	Regulator
GR818	ARE9010	Regulator
GR819	ARE9010	Regulator
GRE792	ARE5028	Regulator
GRE808	ARE5020	Regulator
GY1026A	ARC9005	Rectifier
GY1302A	ARC9007	Rectifier
GY1302B	ARC9006	Rectifier
GY1306A	ARC9002	Rectifier
GY1327	ARC9001	Rectifier
GY1345A	ARC9007	Rectifier
GY1346	ARC9007	Rectifier
GY1351	ARC9009	Rectifier
GY1360	ARC9009	Rectifier
GYE1380	ARC5021	Rectifier

MOTOROLA	AS	PRODUCT
111-1	ABE9004	Bearing
111-15	ABE9004	Bearing
111-16	ABE9001	Bearing
111-2	ABE9001	Bearing

MOTOROLA	AS	PRODUCT
111-20	ABE9001	Bearing
111-21	ABE9004	Bearing
111-22	ABE9001	Bearing
111-23	ABE9001	Bearing
111-24	ABE9004	Bearing
111-28	ABE9001	Bearing
111-40	ABE9038	Bearing
111-78	ABE9006	Bearing
111-82	ABE9004	Bearing
111-83	ABE9001	Bearing
2522148	ARC3036	Rectifier
2523321	ARC3020	Rectifier
259-0913	ARC3021	Rectifier
2940060	A3060	Alternator
2940080	A4011	Alternator
494495	ARE3017	Regulator
501-030	ARC3036	Rectifier
501-089	ARC3036	Rectifier
501-092	ARC3036	Rectifier
505-002	ARE3017	Regulator
505-005	ARE3017	Regulator
505-008	ARE3017	Regulator
505-009	ARE3017	Regulator
505-010	ARE3017	Regulator
505-011	ARE3017	Regulator
505-016	ARE3017	Regulator
505-018	ARE3017	Regulator
505-025	ARE3017	Regulator
505-028	ARE3017	Regulator
505-029	ARE3017	Regulator
505-030	ARE3017	Regulator
505-055	ARE0001	Regulator
505-059	ARE0015	Regulator
505-070	ARE3017	Regulator
505-078	ARE3017	Regulator
505-082	ARE3017	Regulator
505-083	ARE3017	Regulator
505-099	ARE3017	Regulator
505-100	ARE3021	Regulator
505-105	ARE3021	Regulator
505-180	ARE3017	Regulator
507-042	AP3001	Pulley
512-055	ASL9016	Slip ring
590571	ABE9004	Bearing
592806	ARE3021	Regulator
592857	ABE9002	Bearing
592858	ABE9006	Bearing
592888	ARE3021	Regulator
9AL5050K	A4039	Alternator
9AR2630K	A4011	Alternator
9AR2759K	A0069	Alternator
9AR2765	A0069	Alternator
9AR2778K	A3045	Alternator
9AR2784K	A0069	Alternator
9AR2785	A0069	Alternator
9AR2796	A0103	Alternator
9AR2845	A0069	Alternator
9AR2846	A0069	Alternator
9AR2870P	A3046	Alternator
9AR2933P	A3002	Alternator
9AR2945K	A3045	Alternator
9AR2950P	A3001	Alternator

MOTOROLA	AS	PRODUCT
9AR3921G	A0099	Alternator
9AR3927G	A0017	Alternator
9AR3952G	A4029	Alternator
9AR5028K02	A0069	Alternator
9AR5046G	A0098	Alternator
9AR5049K	A4039	Alternator
9AR5055P	A3012	Alternator
9AR5062K	A3013	Alternator
9AR6012	A0102	Alternator
9AR6015K	A0030	Alternator
9RC2006	ARE3017	Regulator
9RC2018	ARE3021	Regulator
9RC2054	ARE3002	Regulator
9RC2062	ARE3009	Regulator
9RC6065	ARE3002	Regulator
9RC6074	ARE3006	Regulator
9RC7002	ARE3017	Regulator
9RC7003	ARE3017	Regulator
9RC7004	ARE3017	Regulator
9RC7008	ARE3017	Regulator
9RC7020	ARE3017	Regulator
9RC7022	ARE3017	Regulator
9RC7028	ARE3017	Regulator
9RC7031	ARE3017	Regulator
9RC7038	ARE3017	Regulator
9RC7059	ARE3017	Regulator
9RC7062	ARE0001	Regulator
9RC7063	ARE3017	Regulator
9RC7065	ARE3017	Regulator
9RC7071	ARE3017	Regulator
9RC7073	ARE3017	Regulator
9RC7088	ARE3021	Regulator
9RC7093	ARE3017	Regulator
9RC7104	ARE3021	Regulator
9RC8090	ARE0015	Regulator

MWM	AS	PRODUCT
12270774	S9054	Starter
6000102270	S9044	Starter
6000102394	S9044	Starter
6005003155	S9044	Starter
6005003156	S9044	Starter
6005016395	S9044	Starter
605720100055	S9043	Starter
605720100071	S9043	Starter
605720100083	S9043	Starter
605720100084	S9044	Starter
605720100105	S9043	Starter
8011080001	ARC0061	Rectifier
8339940004	ARC0061	Rectifier
833994001	ARC0061	Rectifier
8398150001	ARC0061	Rectifier
839815001	ARC0061	Rectifier

NAPA	AS	PRODUCT
AC1N	ARD9036	Diode
AC1P	ARD9035	Diode

NEW HOLLAND	AS	PRODUCT
47129299	A0228	Alternator
82003307	A4033	Alternator
82010242	A4033	Alternator

NIKKO	AS	PRODUCT
0-21000-3291	S6027	Starter

NIKKO	AS	PRODUCT
0-21000-3330	S9007	Starter
0-21000-3660	S6027	Starter
0-21000-3661	S6027	Starter
0-23000-1030	S6027	Starter
0-23000-1031	S6027	Starter
0-23000-1032	S6027	Starter
0-23000-1033	S6027	Starter
0-23000-1170	S9006	Starter
0-23000-1290	S9034	Starter
0-23000-1292	S9034	Starter
0-23000-1410	S9034	Starter
0-23000-1550	S9034	Starter
0-23000-1670	S6027	Starter
0-23000-1750	S9034	Starter
0-23000-1752	S9034	Starter
0-23000-2350	S1015	Starter
0-23000-2358	S1015	Starter
0-23000-2561	S9034	Starter
0-23000-2590	S1015	Starter
0-23000-3010	S6027	Starter
0-23000-3290	S6027	Starter
0-23000-3661	S6027	Starter
0-23000-6510	S9005	Starter
0-23000-6530	S9006	Starter
0-23000-6531	S9006	Starter
0-23000-6532	S9006	Starter
0-23100-0161	SA9002	Starter armature
0-23500-0250	SD9014	Drive
0-23500-0251	SD9014	Drive
0-23500-0520	SD9015	Drive
0-23500-0523	SD9015	Drive
0-24000-0148	S9068	Starter
0-24000-0168	S9068	Starter
0-24000-0178	S9068	Starter
0-25000-7780	SS1019	Starter solenoid
0-25000-7930	SS1019	Starter solenoid
0-33000-1840	A9028	Alternator
0-33000-1870	A9028	Alternator
0-33000-2200	A9024	Alternator
0-33000-2280	A9024	Alternator
0-33000-2281	A9024	Alternator
0-33000-2290	A9024	Alternator
0-33000-2320	A9028	Alternator
0-33000-2321	A9028	Alternator
0-33000-2770	A9028	Alternator
0-33000-2860	A9026	Alternator
0-33000-3070	A9026	Alternator
0-33000-3450	A9024	Alternator
0-33000-3500	A9024	Alternator
0-33000-3700	A9028	Alternator
0-33000-3750	A9028	Alternator
0-33000-3760	A9028	Alternator
0-33000-5090	A9028	Alternator
0-33000-5280	A9026	Alternator
0-33000-5840	A9025	Alternator
0-33000-5850	A9025	Alternator
0-33000-5860	A9026	Alternator
0-33000-5870	A9026	Alternator
0-33000-5880	A9025	Alternator
0-33000-6000	A9028	Alternator
0-33000-6510	A9025	Alternator
0-33000-6511	A9027	Alternator

NIKKO	AS	PRODUCT
0-33000-6580	A9025	Alternator
0-37519-0150	ARE9032	Regulator
0-37519-0151	ARE9032	Regulator
0-47100-4100	SS9012	Starter solenoid
0-47100-4160	SS9012	Starter solenoid
0-47100-4390	SS9012	Starter solenoid
1-0444-62007	ABE9002	Bearing
1-0446-62017	ABE9002	Bearing
1-0446-62027	ABE9003	Bearing
1-0446-62037	ABE9004	Bearing
1-0446-63037	ABE9006	Bearing
1-0452-62017	ABE9002	Bearing
1-0452-62027	ABE9003	Bearing
1-0452-63027	ABE9005	Bearing
1-0452-63037	ABE9006	Bearing
1-0453-62007	ABE9001	Bearing
1-0456-60037	ABE9021	Bearing
1-0456-60047	ABE9035	Bearing
1-0456-62007	ABE9001	Bearing
1-0456-62017	ABE9002	Bearing
1-0456-62027	ABE9003	Bearing
1-0456-63037	ABE9006	Bearing
1-0462-62017	ABE9002	Bearing
1-0462-62027	ABE9003	Bearing
1-0462-63037	ABE9006	Bearing
1-0464-62007	ABE9003	Bearing
1-0472-62017	ABE9002	Bearing
1-0472-62027	ABE9003	Bearing
1-23100-0160	SA9002	Starter armature
1-23500-0170	SD9012	Drive
1-23500-0190	SD9013	Drive
1-23500-0250	SD9014	Drive
7-23100-0190	SA9002	Starter armature
7-23100-0220	SA9002	Starter armature
7-44000-0900	ARE9031	Regulator
KM155	ARE9030	Regulator
KM156	ARE9031	Regulator

NISSAN	AS	PRODUCT
22448-00QAA	IC9001	Ignition Coil
22448-00QAC	IC9001	Ignition Coil
22448-00QAE	IC9001	Ignition Coil
22448-0QAA	IC9001	Ignition Coil
22448-6N011	IC9001	Ignition Coil
23099-T3402	A2010	Alternator
23100-00Q0A	A3037	Alternator
23100-00Q0B	A3035	Alternator
23100-00Q0M	A0168	Alternator
23100-00Q1A	A3035	Alternator
23100-00Q1H	A3106	Alternator
23100-00QA1	A5009	Alternator
23100-00QA5	A0164	Alternator
23100-00QA9	A5009	Alternator
23100-00QAK	A3037	Alternator
23100-00QAL	A3035	Alternator
23100-00QAM	A3037	Alternator
23100-00QAN	A0165	Alternator
23100-00QAT	A3106	Alternator
23100-00QBA	A3052	Alternator
23100-00QBB	A0166	Alternator
23100-00QOB	A3035	Alternator
23100-02N13	A2033	Alternator
23100-02N14	A2014	Alternator

NISSAN	AS	PRODUCT
23100-02N15	A2014	Alternator
23100-02N17	A2033	Alternator
23100-02N18	A2014	Alternator
23100-02N19	A2014	Alternator
23100-02N21	A2033	Alternator
23100-02N22	A2014	Alternator
23100-02N23	A2014	Alternator
23100-05B10	A2036	Alternator
23100-05G05	A2034	Alternator
23100-06N00	A2015	Alternator
23100-0E400	A2009	Alternator
23100-0E402	A2009	Alternator
23100-0E700	A2031	Alternator
23100-0E705	A2031	Alternator
23100-0E706	A2031	Alternator
23100-0E711	A2031	Alternator
23100-0E712	A2031	Alternator
23100-0E715	A2031	Alternator
23100-0E716	A2031	Alternator
23100-0E717	A2031	Alternator
23100-0L701	A2008	Alternator
23100-0M003	A2007	Alternator
23100-0M005	A2007	Alternator
23100-0M006	A2007	Alternator
23100-0M007	A2007	Alternator
23100-0M008	A2007	Alternator
23100-0M009	A2007	Alternator
23100-0M010	A2007	Alternator
23100-0M012	A2007	Alternator
23100-0M901	A2009	Alternator
23100-10B10	A2036	Alternator
23100-20J00	A2034	Alternator
23100-27G00	A2036	Alternator
23100-27G10	A2036	Alternator
23100-2F000	A4022	Alternator
23100-2F001	A4022	Alternator
23100-2F010	A4022	Alternator
23100-2F200	A4078	Alternator
23100-2F201	A4078	Alternator
23100-2F210	A4078	Alternator
23100-2J600	A2021	Alternator
23100-2J601	A2021	Alternator
23100-2Y005	A2008	Alternator
23100-31U01	A2008	Alternator
23100-43G04	A2012	Alternator
23100-43G05	A2033	Alternator
23100-43G06	A2012	Alternator
23100-43G07	A2033	Alternator
23100-43G08	A2012	Alternator
23100-43G09	A2033	Alternator
23100-4M510	A2006	Alternator
23100-4M611	A2029	Alternator
23100-50Y05	A2031	Alternator
23100-50Y06	A2031	Alternator
23100-50Y08	A2031	Alternator
23100-50Y09	A2031	Alternator
23100-50Y18	A2031	Alternator
23100-50Y19	A2031	Alternator
23100-57A00	AR2001	Rotor
23100-57J01	A2009	Alternator
23100-57J02	A2009	Alternator
23100-57J03	A2009	Alternator

NISSAN	AS	PRODUCT
23100-57J04	A2009	Alternator
23100-5V410	A2029	Alternator
23100-5Y700	A2008	Alternator
23100-64J00	A2024	Alternator
23100-64J02	A2024	Alternator
23100-64J03	A2024	Alternator
23100-64J04	A2024	Alternator
23100-64J05	A2024	Alternator
23100-64J10	A2024	Alternator
23100-64J13	A2024	Alternator
23100-64J16	A2024	Alternator
23100-69T61	A0038	Alternator
23100-6J111	A2029	Alternator
23100-6J112	A2029	Alternator
23100-70N00	A2009	Alternator
23100-70N01	A2009	Alternator
23100-71J00	A4015	Alternator
23100-71J00EP	A4015	Alternator
23100-71J06	A4015	Alternator
23100-71J10	A4015	Alternator
23100-77A00	A5013	Alternator
23100-77A10	A5013	Alternator
23100-7T400	A2035	Alternator
23100-7T402	A2035	Alternator
23100-7T403	A2035	Alternator
23100-81W00	A2034	Alternator
23100-86A00	A2007	Alternator
23100-86R00	A2007	Alternator
23100-92G01	A2012	Alternator
23100-9F511	A2029	Alternator
23100-9Y500	A2008	Alternator
23100-AN000	A2030	Alternator
23100-AP000	A2030	Alternator
23100-AU000	A2006	Alternator
23100-BU00A	A2006	Alternator
23100-BU010	A2006	Alternator
23100-BU015	A2006	Alternator
23100-BU500	A2029	Alternator
23100-C8604	A2013	Alternator
23100-CN100	A2008	Alternator
23100-G5700	A2015	Alternator
23100-G5701	A2015	Alternator
23100-G5702	A2015	Alternator
23100-G5704	A2015	Alternator
23100-H7700	A2036	Alternator
23100-H7701	A2036	Alternator
23100-H7702	A2036	Alternator
23100-H7703	A2036	Alternator
23100-H7710	A2036	Alternator
23100-H7711	A2036	Alternator
23100-M5960	A2036	Alternator
23100-M6600	A2036	Alternator
23100-M6601	A2036	Alternator
23100-M6610	A2036	Alternator
23100-N9500	A2036	Alternator
23100-N9502	A2036	Alternator
23100-N9510	A2036	Alternator
23100-N9511	A2036	Alternator
23100-N9512	A2036	Alternator
23100-Q4501	A2036	Alternator
23100-Q4511	A2036	Alternator
23100-R9011	A2036	Alternator

NISSAN	AS	PRODUCT
23100-U9503	A2036	Alternator
23100-U9510	A2036	Alternator
23100-U9512	A2036	Alternator
23100-U9513	A2036	Alternator
23100-V7200	AR2002	Rotor
23100-VB310	A5015	Alternator
23100-VB311	A5015	Alternator
23100-VC100	A2023	Alternator
23100-VC101	A2023	Alternator
23100-VC10A	A2023	Alternator
23100-VC10B	A2023	Alternator
23100-W5800	A2036	Alternator
23100-W5801	A2036	Alternator
23100-W5802	A2036	Alternator
23100-W5803	A2036	Alternator
23100-W5810	A2036	Alternator
23100-W5811	A2036	Alternator
23100-W7015	A2036	Alternator
23102-07201	AS2001	Stator
23102-36N10	AS5004	Stator
23102-61U00	AS2006	Stator
23102-F2500	AS2001	Stator
23102-V7201	AS2001	Stator
23108-54A00	AR2001	Rotor
23108-57J00	AR2001	Rotor
23108-57J02	AR2001	Rotor
23108-V7200	AR2002	Rotor
23118-77A00	ABEC0003	Bearing cover
23120-14801	ABE9002	Bearing
23120-19V01	ABE9002	Bearing
23120-21000	ABE9002	Bearing
23120-57300	ABE9030	Bearing
23120-58500	ABE9006	Bearing
23120-58S01	ABE9015	Bearing
23120-61502	ABE9006	Bearing
23120-65004	ABE9006	Bearing
23120-B9801	ABE9003	Bearing
23120-P4500	ABE9005	Bearing
23124-08E16	ARC5006	Rectifier
23124-0E711	ARC5052	Rectifier
23124-0E712	ARC5052	Rectifier
23124-31P10	ARC5058	Rectifier
23124-42L71	ARC5056	Rectifier
23124-51S10	ARC5013	Rectifier
23124-58L10	ARC5054	Rectifier
23124-77A10	ARC5055	Rectifier
23124-OE711	ARC5052	Rectifier
23124-OE712	ARC5052	Rectifier
23124-V5511	ARC5004	Rectifier
23124-W5811	ARC5015	Rectifier
23124-W7110	ARC5020	Rectifier
23125-04P10	ARE5005	Regulator
23125-58S10	ARE5029	Regulator
23125-77A10	ARE5016	Regulator
23125-P0410	ARE5004	Regulator
23125-P3017	ARE5032	Regulator
23133--58S01	ARE2012	Regulator
23133-04P01	ARE2028	Regulator
23133-08515	ARE5026	Regulator
23133-08E15	ARE5026	Regulator
23133-16E05	ARE2020	Regulator
23133-26E60	ARE2029	Regulator
23133-31U00	ARE2011	Regulator
23133-58S00	ARE2012	Regulator
23133-64J00	ABH2001	A. Brush holder
23133-77A00	ARE2027	Regulator
23133-D4400	ARE2012	Regulator
23133-F6100	ARE2020	Regulator
23133-F6500	ARE2023	Regulator
23133-Q9000	ARE4001	Regulator
23134-Z9000	AB2001	Alt. Brush set
23134-Z9002	AB2001	Alt. Brush set
23135-01B00	AB2005	Alt. Brush set
23135-14610	AB5001	Alt. Brush set
23135-14800	AB2006	Alt. Brush set
23135-1550	AB5005	Alt. Brush set
23135-15500	AB5005	Alt. Brush set
23135-21010	AB5001	Alt. Brush set
23135-59E10	AB5006	Alt. Brush set
23135-76200	AB5001	Alt. Brush set
23135-A5510	AB5002	Alt. Brush set
23135-B9801	ARC5002	Rectifier
23135-H0110	AB5001	Alt. Brush set
23135-H0300	AB2005	Alt. Brush set
23135-J5500	AB5005	Alt. Brush set
23135-P4510	AB5003	Alt. Brush set
23135-W1710	AB5005	Alt. Brush set
23135-W7110	AB5003	Alt. Brush set
23137-J5300	ARC2012	Rectifier
23137-Y7502	ARC2007	Rectifier
23137-Y7503	ARC2007	Rectifier
23137-Z9000	AB5003	Alt. Brush set
23137-Z9001	AB5003	Alt. Brush set
23142-04P01	AB2003	Alt. Brush set
23142-06800	AB2005	Alt. Brush set
23142-0P610	AB5009	Alt. Brush set
23142-19V01	AB2002	Alt. Brush set
23142-1P000	AB2002	Alt. Brush set
23142-20W00	AB2005	Alt. Brush set
23142-50405	AB2005	Alt. Brush set
23142-50Y05	AB2002	Alt. Brush set
23142-58S00	AB2004	Alt. Brush set
23142-60U00	AB2002	Alt. Brush set
23142-64J00	AB2002	Alt. Brush set
23142-V6600	AB2001	Alt. Brush set
23142-W1700	AB2001	Alt. Brush set
23150-2W200	AFP2003	FW pulley
23150-2W20A	AFP2003	FW pulley
23150-57J00	AP2001	Pulley
23150-W1707	AP2001	Pulley
23151-6N200	AFP2001	FW pulley
23151-EB301	AFP5008	FW pulley
23151-EB30A	AFP5008	FW pulley
23151-JG71B	AFP5007	FW pulley
23215-0C001	ARE2015	Regulator
23215-0C400	ARE2024	Regulator
23215-0L701	ARE2019	Regulator
23215-0M011	ARE5040	Regulator
23215-0M800	ARE2017	Regulator
23215-0M801	ARE2017	Regulator
23215-0P611	ARE5034	Regulator
23215-0V001	ARE2026	Regulator
23215-0W402	ARE2026	Regulator
23215-0W403	ARE2026	Regulator
23215-17B10	ARE5026	Regulator
23215-2Y001	ARE2019	Regulator
23215-2Y005	ARE2019	Regulator
23215-31U02	ARE2011	Regulator
23215-50Y05	ARE2014	Regulator
23215-51S10	ARE5026	Regulator
23215-54A00	ARE2003	Regulator
23215-64J00	ARE2013	Regulator
23215-64J02	ARE2022	Regulator
23215-64J13	ARE5034	Regulator
23215-70T00	ARE2015	Regulator
23215-77A10	ARE5016	Regulator
23215-7F700	ARE2036	Regulator
23215-85L00	ARE2015	Regulator
23215-B9800	ARE2002	Regulator
23215-C6800	ARE2005	Regulator
23215-E3200	ARE2002	Regulator
23215-E3201	ARE2002	Regulator
23215-F2500	ARE2002	Regulator
23215-F2501	ARE2002	Regulator
23215-P2500	ARE2002	Regulator
23215-P2501	ARE2002	Regulator
23215-P3017	ARE5032	Regulator
23215-Q4601	ARE2002	Regulator
23215-Q4602	ARE2002	Regulator
23215-W1700	ARE2003	Regulator
23215-W1701	ARE2003	Regulator
23215-W7110	ARE5032	Regulator
23230-01B00	ARC2013	Rectifier
23230-04601	ARC2001	Rectifier
23230-04D00	ARC5025	Rectifier
23230-06500	ARC2001	Rectifier
23230-09W01	ARC2011	Rectifier
23230-0E705	ARC2018	Rectifier
23230-0M000	ARC2021	Rectifier
23230-0M001	ARC2021	Rectifier
23230-10E05	ARC2026	Rectifier
23230-10G00	ARC2009	Rectifier
23230-12G01	ARC2017	Rectifier
23230-16A00	ARC2011	Rectifier
23230-16E05	ARC2026	Rectifier
23230-18A00	ARC2011	Rectifier
23230-26E60	ARC2026	Rectifier
23230-31U01	ARC2022	Rectifier
23230-40U00	ARC2022	Rectifier
23230-50Y06	ARC2031	Rectifier
23230-50Y09	ARC2019	Rectifier
23230-57J03	ARC2009	Rectifier
23230-5C301	ARC2028	Rectifier
23230-6C300	ARC2028	Rectifier
23230-7T400	ARC2032	Rectifier
23230-86N00	ARC2027	Rectifier
23230-B9801	ARC2015	Rectifier
23230-E3200	ARC2011	Rectifier
23230-Q4601	ARC2001	Rectifier
23230-Q9000	ARC4011	Rectifier
23230-V6601	ARC2011	Rectifier
23230-V7200	ARC2009	Rectifier
23230-W7101	ARC2005	Rectifier
23231-65002	ARD9046	Diode
23232-02N09	ARC2011	Rectifier
23232-09W01	ARC2011	Rectifier

NISSAN	AS	PRODUCT
23232-10G00	ARC2009	Rectifier
23232-16A00	ARC2011	Rectifier
23232-18A00	ARC2011	Rectifier
23232-65002	ARD9045	Diode
23232-V6601	ARC2011	Rectifier
23232-W1700	ARC2002	Rectifier
23232-W1705	ARC2004	Rectifier
23235-Q4801	ARE2002	Regulator
23236-U0100	ARC5014	Rectifier
23245-V7200	ARC2009	Rectifier
23300-00H00	S5025	Starter
23300-00H10	S5025	Starter
23300-00Q0B	S3024	Starter
23300-00Q0D	S3061	Starter
23300-00Q0F	S5035	Starter
23300-00QA0	S5035	Starter
23300-00QAC	S3058R	Starter
23300-00QAF	S3024	Starter
23300-00QAH	S0223(BOSCH)	Starter
23300-00QAL	S3021	Starter
23300-00QAM	S3007	Starter
23300-00QAV	S3024	Starter
23300-00QAW	S5038	Starter
23300-00QAZ	S5038	Starter
23300-0M200	S2016	Starter
23300-0M301	S2016	Starter
23300-0M302	S2016	Starter
23300-0M30A	S2016	Starter
23300-0T600	S2009	Starter
23300-10T01	S2007	Starter
23300-10T02	S2005	Starter
23300-11M00	S2015	Starter
23300-11M01	S2015	Starter
23300-11M02	S2015	Starter
23300-1F700	S3051	Starter
23300-1F710	S3022	Starter
23300-1F715	S0239	Starter
23300-1F760	S3051	Starter
23300-1F770	S3022	Starter
23300-1F771	S3022	Starter
23300-1F772	S3022	Starter
23300-1F77A	S3022	Starter
23300-1F77B	S3022	Starter
23300-1M215	S2017	Starter
23300-1M216	S2017	Starter
23300-1S900	S2009	Starter
23300-20P00	S5025	Starter
23300-2F000	S4034	Starter
23300-2J201	S2011	Starter
23300-2J260	S2011	Starter
23300-2J261	S2011	Starter
23300-2T700	S2007	Starter
23300-2W200	S2012	Starter
23300-2W210	S2012	Starter
23300-3400A9	S3061	Starter
23300-3T700	S2007	Starter
23300-43G01	S2007	Starter
23300-45N50	S2007	Starter
23300-45N51	S2007	Starter
23300-4E210	S5017	Starter
23300-50Y00	S2016	Starter
23300-50Y01	S2016	Starter
23300-50Y10	S2016	Starter
23300-50Y11	S2016	Starter
23300-53J11	S5017	Starter
23300-53J12	S5017	Starter
23300-54A00	S2015	Starter
23300-54A01	S2015	Starter
23300-54A05	S2015	Starter
23300-54A06	S2015	Starter
23300-54T00	S2009	Starter
23300-60S10	S5025	Starter
23300-63J10	S5017	Starter
23300-63J11	S5017	Starter
23300-65Y00	S2016	Starter
23300-6K200	S2007	Starter
23300-6T000	S2007	Starter
23300-6T001	S2007	Starter
23300-70J10	S5017	Starter
23300-70J11	S5017	Starter
23300-70J12	S5017	Starter
23300-70Y00	S2017	Starter
23300-70Y01	S2017	Starter
23300-70Y10	S2017	Starter
23300-73C00	S2017	Starter
23300-73C10	S2017	Starter
23300-74Y00	S2017	Starter
23300-74Y10	S2017	Starter
23300-7C625	S0165	Starter
23300-7F400	S2007	Starter
23300-80G00	S2007	Starter
23300-80G01	S2007	Starter
23300-81N00	S2016	Starter
23300-81N11	S2016	Starter
23300-84A07	S2016	Starter
23300-84A17	S2016	Starter
23300-88G00	S2018	Starter
23300-88G01	S2018	Starter
23300-8H601	S5032	Starter
23300-8H801	S5032	Starter
23300-8H80A	S5032	Starter
23300-90067	S2009	Starter
23300-90069	S2009	Starter
23300-92350	S4034	Starter
23300-94851	S0239	Starter
23300-99B15	S0239	Starter
23300-99B16	S0239	Starter
23300-9C600	S0165	Starter
23300-9F600	S3036	Starter
23300-9F660	S3036	Starter
23300-9F661	S3036	Starter
23300-9F662	S3036	Starter
23300-9F664	S3036	Starter
23300-9F66A	S3036	Starter
23300-9F66B	S3036	Starter
23300-AA40A	S5018	Starter
23300-AU601	S5032	Starter
23300-AX000	S3022	Starter
23300-AX002	S3022	Starter
23300-AX00A	S3022	Starter
23300-BC400	S5035	Starter
23300-BC40B	S5035	Starter
23300-BN700	S5038	Starter
23300-BN701	S5038	Starter
23300-BN70A	S5038	Starter
23300-CK800	S2014	Starter
23300-D9700	S0165	Starter
23300-D9701	S0165	Starter
23300-D9702	S0165	Starter
23300-DB000	S2012	Starter
23300-EN200	S2014	Starter
23300-EN20A	S2014	Starter
23300-FU410	S5039	Starter
23300-JG70A	S3061	Starter
23300-K9160	S5010	Starter
23300-L1110	S5025	Starter
23300-L1111	S5025	Starter
23300-L2911	S5025	Starter
23300-L2912	S5025	Starter
23300-OM301	S2016	Starter
23300-OM302	S2016	Starter
23300-P0613	S5025	Starter
23300-P0614	S5025	Starter
23300-P1114	S5025	Starter
23300-P5112	S5025	Starter
23300-P5113	S5025	Starter
23300-P5114	S5025	Starter
23300-R9000	S5025	Starter
23300-T9000	S5052	Starter
23300-T9005	S5052	Starter
23300-T9006	S5052	Starter
23300-T9007	S5052	Starter
23300-T9009	S5052	Starter
23300-T9010	S5052	Starter
23300-V4361	S0015	Starter
23300-V4362	S0015	Starter
23300-VK500	S5036	Starter
23300-VK50A	S5036	Starter
23300-VM00A	S5036	Starter
23300-W9810	S5010	Starter
23300-WK500	S5036	Starter
23300-Y9700	S0165	Starter
23302-99216	SA9005	Starter armature
23310-02N00	SA2008	Starter armature
23310-0M210	SA5013	Starter armature
23310-0M300	SA2010	Starter armature
23310-0Y00	SA2011	Starter armature
23310-10G00	SA2001	Starter armature
23310-31U00	SA2010	Starter armature
23310-42L10	SA5009	Starter armature
23310-42L60	SA2013	Starter armature
23310-42L70	SA5011	Starter armature
23310-43G00	SA2001	Starter armature
23310-45300	SA2002	Starter armature
23310-4J606	SA2017	Starter armature
23310-50Y01	SA2016	Starter armature
23310-54A00	SA2006	Starter armature
23310-54N00	SA2016	Starter armature
23310-54T00	SA2001	Starter armature
23310-65F01	SA2012	Starter armature
23310-65Y10	SA5011	Starter armature
23310-77A00	SA2012	Starter armature
23310-88A00	SA2012	Starter armature
23310-B6010	SA5001	Starter armature
23310-J5501	SA2007	Starter armature
23310-M4900	SA2003	Starter armature

NISSAN	AS	PRODUCT
23310-M4901	SA2003	Starter armature
23310-N5900	SA2002	Starter armature
23310-S0100	SA2004	Starter armature
23310-T9002	SA2015	Starter armature
23310-T9006	SA2005	Starter armature
23310-U6000	SA2004	Starter armature
23312-10G00	SD2009	Drive
23312-11M00	SD2009	Drive
23312-12G02	SD2012	Drive
23312-15810	SD5001	Drive
23312-16E01	SD2005	Drive
23312-25F00	SD2008	Drive
23312-2J200	SD2022	Drive
23312-37502	SD2002	Drive
23312-37503	SD2002	Drive
23312-37504	SD2002	Drive
23312-37505	SD2002	Drive
23312-37506	SD2002	Drive
23312-43G00	SD2010	Drive
23312-50Y01	SD2014	Drive
23312-73Y00	SD2003	Drive
23312-76201	SD2002	Drive
23312-90J00	SD4022	Drive
23312-AA050	SD5030	Drive
23312-C6800	SD2006	Drive
23312-D0100	SD2003	Drive
23312-E3010	SD5001	Drive
23312-H5000	SD2018	Drive
23312-H6900	SD2018	Drive
23312-H9100	SD2004	Drive
23312-J2003	SD2006	Drive
23312-KA060	SD6011	Drive
23312-L1110	SD5004	Drive
23312-L1800	SD2002	Drive
23312-M1500	SD2017	Drive
23312-M1501	SD2017	Drive
23312-M4901	SD2004	Drive
23312-M8011	SD5012	Drive
23312-N5900	SD2004	Drive
23312-T9000	SD2015	Drive
23312-T9003	SD2015	Drive
23312-V0601	SD2002	Drive
23312-V5301	SD2004	Drive
23312-W1700	SD2009	Drive
23312-Y0511	SD5002	Drive
23312-Z9002	SD2002	Drive
23313-90005	SD2023	Drive
23313-99202	SD2023	Drive
23314-T9000	SD5027	Drive
23314-Z9002	SD2015	Drive
23315-C6800	ARE2007	Regulator
23319-M4900	ABE9010	Bearing
23331-Z9002	SB2004	Sta. Brush set
23331-Z9003	SB2004	Sta. Brush set
23338-J5500	ABE9034	Bearing
23338-N3300	SBU9031	Bushing
23343-00H11	SS5020	Starter solenoid
23343-02N00	SS2008	Starter solenoid
23343-04E00	SS2003	Starter solenoid
23343-04E01	SS2003	Starter solenoid
23343-04E10	SS5033	Starter solenoid
23343-05E10	SS5010	Starter solenoid
23343-0B710	SS5026	Starter solenoid
23343-0M210	SS5026	Starter solenoid
23343-0W010	SS5022	Starter solenoid
23343-10600	SS2001	Starter solenoid
23343-12G02	SS2016	Starter solenoid
23343-12G03	SS2016	Starter solenoid
23343-16E02	SS2019	Starter solenoid
23343-16E03	SS2019	Starter solenoid
23343-18005	SS2001	Starter solenoid
23343-20H12	SS5033	Starter solenoid
23343-20P00	SS2006	Starter solenoid
23343-30R13	SS5031	Starter solenoid
23343-30R15	SS5031	Starter solenoid
23343-31U00	SS2019	Starter solenoid
23343-31W00	SS2004	Starter solenoid
23343-36A01	SS2003	Starter solenoid
23343-36A10	SS5033	Starter solenoid
23343-37502	SS2001	Starter solenoid
23343-37503	SS2001	Starter solenoid
23343-37506	SS2004	Starter solenoid
23343-37A10	SS5033	Starter solenoid
23343-43G00	SS2008	Starter solenoid
23343-54A00	SS2015	Starter solenoid
23343-60U10	SS5028	Starter solenoid
23343-61504	SS2005	Starter solenoid
23343-63J11	SS5003	Starter solenoid
23343-63J12	SS5003	Starter solenoid
23343-77A11	SS5003	Starter solenoid
23343-80W00	SS2018	Starter solenoid
23343-80W01	SS2018	Starter solenoid
23343-85A11	SS5031	Starter solenoid
23343-88407	SS2022	Starter solenoid
23343-99013	SS2001	Starter solenoid
23343-AA000	SS5002	Starter solenoid
23343-C0600	SS2009	Starter solenoid
23343-D0300	SS2003	Starter solenoid
23343-E3011	SS5033	Starter solenoid
23343-G7001	SS2005	Starter solenoid
23343-G7002	SS2004	Starter solenoid
23343-H0100	SS2001	Starter solenoid
23343-H5000	SS2002	Starter solenoid
23343-H5001	SS2002	Starter solenoid
23343-H9100	SS2003	Starter solenoid
23343-M0100	SS2001	Starter solenoid
23343-M4900	SS2003	Starter solenoid
23343-M8000	SS2006	Starter solenoid
23343-M8001	SS2006	Starter solenoid
23343-M8003	SS2006	Starter solenoid
23343-M8011	SS5002	Starter solenoid
23343-M8110	SS5033	Starter solenoid
23343-M8111	SS5033	Starter solenoid
23343-M8210	SS5003	Starter solenoid
23343-OM210	SS5026	Starter solenoid
23343-P0610	SS5001	Starter solenoid
23343-P5111	SS5033	Starter solenoid
23343-Q9000	SS4023	Starter solenoid
23343-R9000	SS5033	Starter solenoid
23343-T0110	SS5033	Starter solenoid
23343-T0111	SS5033	Starter solenoid
23343-T3470	SS2005	Starter solenoid
23343-T5002	SS5003	Starter solenoid
23343-U6000	SS2010	Starter solenoid
23343-V0700	SS2002	Starter solenoid
23343-V5201	SS2006	Starter solenoid
23343-V5301	SS2003	Starter solenoid
23343-W0400	SS2013	Starter solenoid
23343-W0401	SS2013	Starter solenoid
23343-W1700	SS2014	Starter solenoid
23343-Y0513	SS5033	Starter solenoid
23354-06W60	SD2019	Drive
23354-20R10	SD5006	Drive
23354-30R10	SD5036	Drive
23354-42L10	SD5004	Drive
23354-42L70	SD5005	Drive
23354-53J11	SD5018	Drive
23354-K9160	SD5017	Drive
23354-N5912	SD5024	Drive
23354-W9810	SD5025	Drive
23363-07G00	ABE9010	Bearing
23363-M4900	ABE9035	Bearing
23378-05E00	SBH2004	S. Brush holder
23378-0M300	SBH2002	S. Brush holder
23378-10G00	SBH2001	S. Brush holder
23378-1E400	SBH2002	S. Brush holder
23378-41B00	SBH2003	S. Brush holder
23378-53A10	SBH5007	S. Brush holder
23378-53J10	SBH5007	S. Brush holder
23378-53Y00	SBH2003	S. Brush holder
23378-54A00	SBH2001	S. Brush holder
23378-H8011	SBH5007	S. Brush holder
23378-M4901	SBH2004	S. Brush holder
23378-M8011	SBH5007	S. Brush holder
23378-N5911	SBH5005	S. Brush holder
23378-V7200	SBH2001	S. Brush holder
23378-W2810	SB5008	Sta. Brush set
23379-09900	SB2013	Sta. Brush set
23379-0M300	SB2010	Sta. Brush set
23379-1000	SB2001	Sta. Brush set
23379-16E01	SB2001	Sta. Brush set
23379-1E400	SB2009	Sta. Brush set
23379-1P100	SB2009	Sta. Brush set
23379-2100	SB2001	Sta. Brush set
23379-61501	SB2014	Sta. Brush set
23379-61503	SB2014	Sta. Brush set
23379-J2000	SB2014	Sta. Brush set
23379-J5500	SB2004	Sta. Brush set
23379-M0100	SB2002	Sta. Brush set
23379-M4900	SB2003	Sta. Brush set
23380-0M300	SB2010	Sta. Brush set
23380-10600	SB2013	Sta. Brush set
23380-10G00	SB2006	Sta. Brush set
23380-16E01	SB2001	Sta. Brush set
23380-21000	SB2001	Sta. Brush set
23380-42L60	SB2008	Sta. Brush set
23380-57M60	SB2008	Sta. Brush set
23380-61503	SB2014	Sta. Brush set
23380-77A01	SB2008	Sta. Brush set
23380-J2000	SB2014	Sta. Brush set
23380-J5500	SB2004	Sta. Brush set
23380-M0100	SB2002	Sta. Brush set
23380-M4900	SB2003	Sta. Brush set
23380-M8310	SB5001	Sta. Brush set
23380-M8311	SB5001	Sta. Brush set
23441-10T00	ABE9035	Bearing

NISSAN	AS	PRODUCT
23441-43G00	ABE9020	Bearing
23528-05E06	ARE2001	Regulator
23528-18G01	ARE2001	Regulator
23528-34T01	ARE2005	Regulator
23528-C8601	ARE2035	Regulator
23528-V7200	ARE2001	Regulator
28230-E3200	ARC2011	Rectifier
31220-51A10	SS6005	Starter solenoid
31320-51A10	SD6014	Drive
31320-60A10	SD5019	Drive
32312-E3010	SD5001	Drive
34466-20102	S5003	Starter
52810-31000	A2006	Alternator

NSK	AS	PRODUCT
6003DW	ABE9039	Bearing
B10-27D	ABE9032	Bearing
B10-46D	ABE9013	Bearing
B10-50D	ABE9015	Bearing
B10-50T12DDNCX	ABE9015	Bearing
B15-69D	ABE9030	Bearing
B15-70D	ABE9036	Bearing
B15-83D	ABE9036	Bearing
B15-86D	ABE9028	Bearing
B15-86W3	ABE9028	Bearing
B15-94DW3	ABE9036	Bearing
B17-126DD	ABE9041(NSK)	Bearing
B17-127DG	ABE9044	Bearing
B17-99DDW	ABE9018	Bearing
B8-23D	ABE9027	Bearing
B8-74D	ABE9011	Bearing
B8-79D	ABE9012	Bearing
B8-85D	ABE9014	Bearing
TM62304LLUA17	ABE9025	Bearing

NTN	AS	PRODUCT
808A05LH1	ABE9027	Bearing
SC0352LLUACLW	ABE9018	Bearing
SC8AD5LHI	ABE9027	Bearing
TMB303LLU	ABE9028	Bearing
TMB303LUX	ABE9028	Bearing

OMAR	AS	PRODUCT
00-41-32	SD4004	Drive
00-41-74	SD4006	Drive
01-41-66	SD4029	Drive
01-41-77	SD4010	Drive
01-41-78	SD4005	Drive
01-41-88	SD4007	Drive
01-41-91	SD4011	Drive
01-41-92	SD4012	Drive
01-41-93	SD4009	Drive
01-41-94	SD4018	Drive
02-42-99	SD0114	Drive
03-42-80	SD0006	Drive
03-42-81	SD0005	Drive
03-42-88	SD0015	Drive
03-42-97	SD0157	Drive
06-46-61	SD3003	Drive
09-60-96	SD1001	Drive
09-71-63	SD5001	Drive
09-72-62	SD6001	Drive
09-72-67	SD6002	Drive
105-70-04	SD2019	Drive
105-71-01	SD5024	Drive
105-71-52	SD5027	Drive
105-71-53	SD5026	Drive
105-71-54	SD5031	Drive
105-72-09	SD6025	Drive
105-72-77	SD6028	Drive
13-42-80	SD0104	Drive
202-71-00	SD5033	Drive
205-71-32	SD5032	Drive
21-41-01	SD4016	Drive
21-41-04	SD4014	Drive
21-41-05	SD4015	Drive
21-41-07	SD4019	Drive
21-41-15	SD4023	Drive
21-41-16	SD4021	Drive
21-41-17	SD4024	Drive
21-41-18	SD4030	Drive
21-41-19	SD4027	Drive
21-41-20	SD4026	Drive
21-41-21	SD4005	Drive
21-41-23	SD4029	Drive
21-41-29	SD4016	Drive
21-41-32	SD4032	Drive
21-41-34	SD4031	Drive
21-41-37	SD4033	Drive
21-41-38	SD4025	Drive
21-41-39	SD4039	Drive
21-41-41	SD4028	Drive
22-42-44	SD0105	Drive
22-42-59	SD0139	Drive
22-42-64	SD0048	Drive
22-42-87	SD0018	Drive
22-42-97	SD0030	Drive
23-42-80	SD0113	Drive
25-44-24	SD4001	Drive
25-44-26	SD4038	Drive
25-44-31	SD4002	Drive
25-44-32	SD4003	Drive
25-44-33	SD4008	Drive
25-44-50	SD4036	Drive
25-44-85	SD4013	Drive
25-44-96	SD4017	Drive
26-46-39	SD3002	Drive
26-46-40	SD3001	Drive
26-46-49	SD3008	Drive
26-46-54	SD3005	Drive
26-46-57	SD3004	Drive
26-46-86	SD3006	Drive
26-46-89	SD3007	Drive
26-46-91	SD3009	Drive
26-46-92	SD3010	Drive
26-46-93	SD3011	Drive
29-51-14	SD0034	Drive
29-54-37	SD9001	Drive
29-70-54	SD2017	Drive
29-70-72	SD2018	Drive
29-70-84	SD2002	Drive
29-71-96	SD5002	Drive
29-72-76	SD6003	Drive
32-42-01	SD0042	Drive
32-42-03	SD0002	Drive
32-42-07	SD0009	Drive
32-42-08	SD0019	Drive
32-42-10	SD0118	Drive
32-42-19	SD0002	Drive
32-42-34	SD0004	Drive
32-42-35	SD0011	Drive
32-42-57	SD0031	Drive
32-42-61	SD0008	Drive
32-42-62	SD0003	Drive
32-42-66	SD0152	Drive
32-42-71	SD0009	Drive
32-42-72	SD0106	Drive
32-42-78	SD0010	Drive
32-42-80	SD0007	Drive
32-42-98	SD0012	Drive
34-44-65	SD4037	Drive
35-44-53	SD4035	Drive
35-44-71	SD4034	Drive
35-44-90	SD4022	Drive
35-44-91	SD4020	Drive
36-46-07	SD3021	Drive
36-46-08	SD3012	Drive
36-46-09	SD3013	Drive
36-46-10	SD3015	Drive
36-46-11	SD3017	Drive
36-46-14	SD3014	Drive
36-46-15	SD3016	Drive
36-46-16	SD3018	Drive
36-46-17	SD3022	Drive
36-46-21	SD3019	Drive
36-46-22	SD3024	Drive
36-46-23	SD3027	Drive
36-46-24	SD3020	Drive
36-46-25	SD3029	Drive
36-46-26	SD3031	Drive
36-46-33	SD3041	Drive
39-70-83	SD2006	Drive
39-70-97	SD2001	Drive
39-72-74	SD6002	Drive
39-72-82	SD6013	Drive
42-42-08	SD0001	Drive
42-42-16	SD0022	Drive
42-42-17	SD0016	Drive
42-42-19	SD0013	Drive
42-42-21	SD0017	Drive
42-42-25	SD0020	Drive
42-42-26	SD0026	Drive
42-42-27	SD0054	Drive
42-42-29	SD0036	Drive
42-42-31	SD0027	Drive
42-42-33	SD0051	Drive
42-42-37	SD0014	Drive
42-42-42	SD0050	Drive
42-42-43	SD0021	Drive
42-42-44	SD0032	Drive
42-42-46	SD0023	Drive
42-42-48	SD0039	Drive
42-42-50	SD0040	Drive
42-42-57	SD0037	Drive
42-42-58	SD0025	Drive
42-42-59	SD0043	Drive
42-42-60	SD0033	Drive

OMAR	AS	PRODUCT
42-42-61	SD0044	Drive
42-42-63	SD0038	Drive
42-42-65	SD0041	Drive
42-42-66	SD0045	Drive
42-42-70	SD0052	Drive
42-42-71	SD0047	Drive
42-42-74	SD0049	Drive
42-42-75	SD0035	Drive
42-42-80	SD0087	Drive
42-42-84	SD0024	Drive
42-42-86	SD0153	Drive
42-42-88	SD0053	Drive
42-42-92	SD0140	Drive
42-42-93	SD0064	Drive
42-42-94	SD0055	Drive
42-42-95	SD0060	Drive
42-42-96	SD0058	Drive
42-42-97	SD0059	Drive
49-50-74	SD9002	Drive
49-50-98	SD9004	Drive
49-52-84	SD9032	Drive
49-70-05	SD2004	Drive
49-70-29	SD2009	Drive
49-70-31	SD2005	Drive
49-70-37	SD2003	Drive
49-70-72	SD2016	Drive
49-70-79	SD2008	Drive
49-70-93	SD2010	Drive
49-70-96	SD2020	Drive
49-71-42	SD5004	Drive
49-71-45	SD5028	Drive
49-71-46	SD5003	Drive
49-71-56	SD5011	Drive
49-71-65	SD5012	Drive
49-71-66	SD5010	Drive
49-72-73	SD6004	Drive
49-72-77	SD6005	Drive
49-72-85	SD6009	Drive
49-72-87	SD6019	Drive
49-72-94	SD6007	Drive
52-42-00	SD0067	Drive
52-42-02	SD0121	Drive
52-42-04	SD0037	Drive
52-42-05	SD0025	Drive
52-42-07	SD0061	Drive
52-42-08	SD0063	Drive
52-42-09	SD0057	Drive
52-42-12	SD0081	Drive
52-42-13	SD0052	Drive
52-42-15	SD0068	Drive
52-42-18	SD0055	Drive
52-42-20	SD0099	Drive
52-42-22	SD0094	Drive
52-42-23	SD0056	Drive
52-42-29	SD0082	Drive
52-42-30	SD0071	Drive
52-42-34	SD0085	Drive
52-42-36	SD0073	Drive
52-42-37	SD0074	Drive
52-42-38	SD0076	Drive
52-42-40	SD0080	Drive
52-42-41	SD0124	Drive
52-42-42	SD0065	Drive
52-42-43	SD0077	Drive
52-42-47	SD0034	Drive
52-42-49	SD0093	Drive
52-42-50	SD0070	Drive
52-42-51	SD0066	Drive
52-42-52	SD0075	Drive
52-42-53	SD0107	Drive
52-42-54	SD0072	Drive
52-42-57	SD0154	Drive
52-42-59	SD0089	Drive
52-42-60	SD0078	Drive
52-42-61	SD0116	Drive
52-42-66	SD0111	Drive
52-42-71	SD0088	Drive
52-42-73	SD0145	Drive
52-42-74	SD0070	Drive
52-42-75	SD0092	Drive
52-42-79	SD0083	Drive
52-42-80	SD0108	Drive
52-42-81	SD0096	Drive
52-42-84	SD0102	Drive
52-42-85	SD0097	Drive
52-42-86	SD0098	Drive
52-42-89	SD0142	Drive
52-42-90	SD0101	Drive
52-42-93	SD0112	Drive
52-42-94	SD0101	Drive
52-42-95	SD0143	Drive
52-42-96	SD0115	Drive
52-42-97	SD0141	Drive
52-42-98	SD0126	Drive
52-42-99	SD0130	Drive
59-52-47	SD9008	Drive
59-52-48	SD9006	Drive
59-60-09	SD9005	Drive
59-60-16	SD6016	Drive
59-60-18	SD9029	Drive
59-60-19	SD1019	Drive
59-60-53	SD9007	Drive
59-70-22	SD2015	Drive
59-70-58	SD2023	Drive
59-70-60	SD2013	Drive
59-70-62	SD2014	Drive
59-71-08	SD5016	Drive
59-71-27	SD5013	Drive
59-71-70	SD5020	Drive
59-71-71	SD5005	Drive
59-71-72	SD5006	Drive
59-71-73	SD5034	Drive
59-71-75	SD5023	Drive
59-71-76	SD5022	Drive
59-71-77	SD5030	Drive
59-71-78	SD5014	Drive
59-71-79	SD5021	Drive
59-71-80	SD5035	Drive
59-72-00	SD6012	Drive
59-72-11	SD6026	Drive
59-72-12	SD6024	Drive
59-72-23	SD6008	Drive
59-72-82	SD6018	Drive
59-72-84	SD6015	Drive
59-73-07	SD9013	Drive
59-74-20	SD1011	Drive
59-74-21	SD1008	Drive
62-42-00	SD0109	Drive
62-42-02	SD0103	Drive
62-42-03	SD0129	Drive
62-42-06	SD0084	Drive
62-42-07	SD0123	Drive
62-42-10	SD0125	Drive
62-42-11	SD0110	Drive
62-42-14	SD0136	Drive
62-42-15	SD0138	Drive
62-42-16	SD0120	Drive
62-42-17	SD0122	Drive
62-42-19	SD0100	Drive
62-42-20	SD0148	Drive
62-42-22	SD0137	Drive
62-42-30	SD0155	Drive
81-42-50	SD0079	Drive
81-46-39	SD3025	Drive
81-60-01	SD1003	Drive
81-60-03	SD1005	Drive
81-60-09	SD0029	Drive
81-60-10	SD0028	Drive
81-60-18	SD1015	Drive
81-60-21	SD1016	Drive
83-60-00	SD1004	Drive
83-60-03	SD1005	Drive
84-60-06	SD1020	Drive
85-00-00	AFP9002	Cover for pulley
85-41-00	AFP4001	FW pulley
85-41-67	AFP4005	FW pulley
85-41-71	AFP4002	FW pulley
85-41-80	AFP6013	FW pulley
85-42-01	AFP0001	FW pulley
85-42-02	AFP0004	FW pulley
85-42-03	AFP0005	FW pulley
85-42-04	AFP0006	FW pulley
85-42-05	AFP0003	FW pulley
85-42-06	AFP0010	FW pulley
85-42-07	AFP0008	FW pulley
85-42-08	AFP0015	FW pulley
85-42-09	AFP0021	FW pulley
85-42-10	AFP0014	FW pulley
85-42-11	AFP0009	FW pulley
85-42-25	AFP0013	FW pulley
85-46-19	AFP3005	FW pulley
85-74-39	AFP2002	FW pulley

ONAN	AS	PRODUCT
191-1430	SS5010	Starter solenoid

OPEL	AS	PRODUCT
09131133	A0171	Alternator
09131264	A0047	Alternator
09152247	A0121	Alternator
09195337	AFP0026	FW pulley
10297421	A3036	Alternator
10297821	A3036	Alternator
10469931	IM1002	Ignition Module
10479273	A1001	Alternator
10479923	A1001	Alternator
10480384	A1001	Alternator
10482824	IM1001	Ignition Module

OPEL	AS	PRODUCT
1202000	S0034	Starter
1202001	S1013	Starter
1202002	S1013	Starter
1202005	S0034	Starter
1202010	S0034	Starter
1202015	S2002	Starter
1202016	S0217	Starter
1202017	S6022	Starter
1202019	S1013	Starter
1202020	S1013	Starter
1202026	S2004	Starter
1202033	S2004	Starter
1202045	S0217	Starter
1202109	S1013	Starter
1202110	S1013	Starter
1202125	S0034	Starter
1202126	S1013	Starter
1202129	S1013	Starter
1202130	S0034	Starter
1202137	S1013	Starter
1202138	S0126	Starter
1202141	S0093	Starter
1202142	S3003	Starter
1202143	S0217	Starter
1202144	S0126	Starter
1202145	S0098	Starter
1202147	S6022	Starter
1202148	S0036	Starter
1202152	S2010	Starter
1202154	S2010	Starter
1202156	S0217	Starter
1202157	S2002	Starter
1202159	S0098	Starter
1202161	S2004	Starter
1202163	S6022	Starter
1202168	S0093	Starter
1202172	S3003	Starter
1202174	S3003	Starter
1202179	S0141	Starter
1202184	S2010	Starter
1202953	S1013	Starter
1202956	S0217	Starter
1202958	S0034	Starter
1203150	SD2004	Drive
1203152	SD2004	Drive
1204007	A2026	Alternator
1204008	A2026	Alternator
1204041	A0134	Alternator
1204042	A0134	Alternator
1204054	A1009	Alternator
1204062	A2020	Alternator
1204072	A0134	Alternator
1204084	A2026	Alternator
1204091	A0115	Alternator
1204131	A0115	Alternator
1204132	A2020	Alternator
1204144	A2005	Alternator
1204146	A1001	Alternator
1204151	AFP0041	FW pulley
1204157	A2011	Alternator
1204158	A2003	Alternator
1204160	A0209	Alternator
1204175	AFP0041	FW pulley
1204240	ARE2009	Regulator
1204328	A0134	Alternator
1204341	A0134	Alternator
1204349	A0115	Alternator
1204366	AFP2002	FW pulley
1204376	AFP0026	FW pulley
1204378	AFP0035	FW pulley
1204392	AFP3008	FW pulley
1204393	AFP0061	FW pulley
1204413	AFP4002	FW pulley
1204434	A4048	Alternator
1204484	AFP0066	FW pulley
1205409	ARC1025	Rectifier
1205464	ARC1002	Rectifier
1205572	ARC0063	Rectifier
1211582	IM1001	Ignition Module
1211591	IM1001	Ignition Module
12570230	S1008	Starter
12570623	S1008	Starter
12572716	S1003	Starter
12760888	AFP0063	FW pulley
1277125	AFP0060	FW pulley
13108596	A0209	Alternator
13117236	A4048	Alternator
13117278	A3078	Alternator
13117279	A3055	Alternator
13117340	A4042	Alternator
13117341	A4073	Alternator
13129850	A0047	Alternator
13147093	A0066	Alternator
13153236	A4048	Alternator
13156050	A0066	Alternator
13156052	A0225	Alternator
13197577	A3078	Alternator
13222935	A4070	Alternator
13222936	A4071	Alternator
13229988	A0047	Alternator
13229991	A0215	Alternator
13229992	A0215	Alternator
13256931	A4071	Alternator
13256932	A4070	Alternator
13283343	A3078	Alternator
13283344	A4074	Alternator
16139379	IM1002	Ignition Module
16140039	IM1002	Ignition Module
16158829	IM1001	Ignition Module
16410049	IM1001	Ignition Module
1979571	IM1001	Ignition Module
1985342	IM1001	Ignition Module
24414255	A0219	Alternator
24415914	A0047	Alternator
24430294	A0047	Alternator
24430295	A0121	Alternator
24436224	A0171	Alternator
24436877	S0088	Starter
24437119	A0225	Alternator
24439410	A1001	Alternator
24439411	A1001	Alternator
24451624	A3094	Alternator
24451624YC	A3094	Alternator
24454172	S0093	Starter
24455914	A0047	Alternator
24460703	S0231	Starter
3493814	A1010	Alternator
3493815	A1010	Alternator
3493823	A1001	Alternator
3493824	A1001	Alternator
4402602	S3039	Starter
4403215	A3111	Alternator
4403540	A3037	Alternator
4404221	S3024	Starter
4404331	A3035	Alternator
4405286	A0165	Alternator
4408389	IC9001	Ignition Coil
4411316	A3037	Alternator
4413223	IC9001	Ignition Coil
4413233	IC9001	Ignition Coil
4414332	S3058R	Starter
4414402	S3058R	Starter
4415443	S3024	Starter
4416485	A0164	Alternator
4416774	S3061	Starter
4417538	S3061	Starter
4417846	A3035	Alternator
4430591	A3037	Alternator
4500045	A3111	Alternator
4500256	S5009	Starter
4502489	S3039	Starter
4506175	S3024	Starter
4606175	S3024	Starter
4805518	S0098	Starter
55351608	S0088	Starter
55351630	S0036	Starter
55351638	S0098	Starter
55352882	S5042	Starter
55352897	AFP0061	FW pulley
55353237	S0100	Starter
55353257	S0100	Starter
55353857	S0186R	Starter
55358857	S0186R	Starter
55556065	A0121	Alternator
55556070	A1011	Alternator
55556071	A1011	Alternator
55556092	S9062	Starter
55556093	S9062	Starter
55556130	S0088	Starter
55560294	AFP0066	FW pulley
55564350	AFP0041	FW pulley
55571966	AFP0041	FW pulley
6202000	S2001	Starter
6202001	S2010	Starter
6202006	S0231	Starter
6202007	S0141	Starter
6202008	S0098	Starter
6202009	S0036	Starter
6202013	S0088	Starter
6202014	S0036	Starter
6202016	S0088	Starter
6202017	S0093	Starter
6202020	S0088	Starter
6202021	S0231	Starter
6202052	S0231	Starter
6202060	S0036	Starter

OPEL	AS	PRODUCT
6202061	S0088	Starter
6202064	S0088	Starter
6202066	S0098	Starter
6202071	S0100	Starter
6202072	S0088	Starter
6202073	S5042	Starter
6202074	S0186R	Starter
6202075	S3003	Starter
6202077	S0088	Starter
6202079	S0088	Starter
6202083	S3018	Starter
6202084	S9062	Starter
6202087	S2001	Starter
6202088	S0088	Starter
6202103	S2001	Starter
6204000	A1001	Alternator
6204002	A1001	Alternator
6204004	A1012	Alternator
6204005	A1012	Alternator
6204006	A1010	Alternator
6204009	A1010	Alternator
6204012	A0051	Alternator
6204013	A2005	Alternator
6204014	A3076	Alternator
6204025	A0174	Alternator
6204034	A0051	Alternator
6204042	A2001	Alternator
6204043	A2016	Alternator
6204045	A2032	Alternator
6204046	A2001	Alternator
6204047	A2016	Alternator
6204057	A2027	Alternator
6204060	A3076	Alternator
6204062	A1012	Alternator
6204063	A0116	Alternator
6204066	A0051	Alternator
6204073	A1011	Alternator
6204074	A1009	Alternator
6204080	A0066	Alternator
6204084	A0171	Alternator
6204085	A3036	Alternator
6204095	A0154	Alternator
6204098	A1011	Alternator
6204099	A0121	Alternator
6204102	A0225	Alternator
6204105	A0052	Alternator
6204106	A2001	Alternator
6204109	A1001	Alternator
6204112	A0047	Alternator
6204113	A0121	Alternator
6204116	A0171	Alternator
6204119	A0047	Alternator
6204140	A2003	Alternator
6204143	A0171	Alternator
6204160	A1012	Alternator
6204164	A3036	Alternator
6204173	A0047	Alternator
6204178	A0066	Alternator
6204179	A0225	Alternator
6204180	A3078	Alternator
6204181	A3055	Alternator
6204183	A2038	Alternator
6204184	A0121	Alternator
6204187	A4042	Alternator
6204188	A4073	Alternator
6204189	A4048	Alternator
6204191	A0066	Alternator
6204193	A0225	Alternator
6204199	A2022	Alternator
6204200	A2022	Alternator
6204204	A1011	Alternator
6204207	A0121	Alternator
6204209	A1011	Alternator
6204258	A4070	Alternator
6204259	A4071	Alternator
6204282	A4071	Alternator
6204283	A4070	Alternator
6204284	A2003	Alternator
6205432	ARC1003	Rectifier
8161400490	IM1001	Ignition Module
824189	A4048	Alternator
83501087	IM1001	Ignition Module
8983501087	IM1001	Ignition Module
90094133	S1013	Starter
90277934	S0034	Starter
90297846	S0034	Starter
90337044	A0134	Alternator
90337074	A0134	Alternator
90348290	S0034	Starter
90348291	S1013	Starter
90349328	A0115	Alternator
90349835	A0134	Alternator
90349853	A0134	Alternator
90350009	ARC0063	Rectifier
90350013	ARC0062	Rectifier
90356665	A0116	Alternator
90356897	A1001	Alternator
90365665	A0116	Alternator
90370766	S0098	Starter
90371766	S0098	Starter
90371767	A2001	Alternator
90413763	A1012	Alternator
90421722	SS3004	Starter solenoid
90421772	SS3004	Starter solenoid
90421876	S3003	Starter
90443488	S0217	Starter
90443929	A1001	Alternator
90443931	A0116	Alternator
90444193	S0126	Starter
90444194	A1012	Alternator
90444195	A1012	Alternator
90458462	S0126	Starter
90460576	A0051	Alternator
90465731	S0093	Starter
90508037	S0098	Starter
90508842	A0051	Alternator
90509838	A0051	Alternator
90511442	A3076	Alternator
90511841	S0217	Starter
90512188	S0126	Starter
90512189	S0098	Starter
90512219	A0174	Alternator
90512467	S0036	Starter
90519331	S0036	Starter
90540209	A0051	Alternator
90540586	S0217	Starter
90542409	A3076	Alternator
90542412	S0093	Starter
90542980	A1012	Alternator
90542981	A0116	Alternator
90543012	A0051	Alternator
90543871	S3003	Starter
90561169	A0052	Alternator
90561971	A1011	Alternator
90561972	A0066	Alternator
90586916	S0141	Starter
9110411	S3052	Starter
9110602	S3039	Starter
9111215	A3111	Alternator
9111540	A3037	Alternator
9112221	S3024	Starter
9112331	A3035	Alternator
9112333	S3024	Starter
9115191	S3003	Starter
9115192	S3003	Starter
9115197	S0088	Starter
91159996	IC9001	Ignition Coil
91167270	S3058R	Starter
91167474	S3058R	Starter
91167635	S3024	Starter
9117031	S3003	Starter
9117691	S0141	Starter
9117851	A1011	Alternator
9117936	A0066	Alternator
9117937	A0052	Alternator
9118738	A0171	Alternator
9119309	A1009	Alternator
9119793	S2004	Starter
9121119	A0165	Alternator
9130838	S3003	Starter
9131133	A0171	Alternator
9131264	A0047	Alternator
9132653	A1009	Alternator
9141395	A2011	Alternator
9152247	A0121	Alternator
9160345	A3111	Alternator
9160556	S5009	Starter
9173572	A0066	Alternator
9193117	A0219	Alternator
9195336	A0066	Alternator
9195753	A1011	Alternator
9198664	S5009	Starter
9199321	S0088	Starter
9199574	A0047	Alternator
9199575	A0121	Alternator
91995753	A1011	Alternator
92000960	S0141	Starter
9200890	S0231	Starter
9200955	A0219	Alternator
9200956	A0225	Alternator
9200959	A0052	Alternator
9200960	S0141	Starter
9200961	S0098	Starter
9200962	S0036	Starter
9201489	A1011	Alternator
9201491	A1001	Alternator

OPEL	AS	PRODUCT
9201825	S3024	Starter
92059984	A1001	Alternator
93160664	A3063	Alternator
93160665	A3037	Alternator
93161425	A3037	Alternator
93169030	A4048	Alternator
93170214	AFP0026	FW pulley
93170304	A0171	Alternator
93171526	S0036	Starter
93171936	S0088	Starter
93171945	S0093	Starter
93171950	S0088	Starter
93172020	S0231	Starter
93172080	A0047	Alternator
93172295	AFP0054	FW pulley
93174028	S2001	Starter
93174341	S3039	Starter
93174497	A0209	Alternator
93175799	A2003	Alternator
93175805	A0171	Alternator
93175808	A0066	Alternator
93175826	A3036	Alternator
93175887	S0231	Starter
93175905	S0231	Starter
93175957	A0066	Alternator
93175971	A3036	Alternator
93175986	AFP0035	FW pulley
9317599	A2003	Alternator
93175996	S0088	Starter
93176034	S0036	Starter
93176035	A0047	Alternator
93176051	S0088	Starter
93176061	S0098	Starter
93177834	A0066	Alternator
93177835	A0225	Alternator
93178138	S0100	Starter
93178167	S0088	Starter
93178273	AFP3008	FW pulley
93180098	A4042	Alternator
93180102	A4073	Alternator
93180104	A4048	Alternator
93180414	A0066	Alternator
93180416	A0225	Alternator
93183436	A1011	Alternator
93184052	A0121	Alternator
93184064	A1011	Alternator
93184533	S0088	Starter
93184535	S0088	Starter
93186246	S3018	Starter
93187158	SS0044	Starter solenoid
93188332	A0164	Alternator
93190141	ARE0067	Regulator
93190828	A0047	Alternator
93190956	S3024	Starter
93190996	S3024	Starter
93191541	A3035	Alternator
93191921	A0215	Alternator
93191922	A0215	Alternator
93198179	A3037	Alternator
93297735	AFP3006	FW pulley
93604828	S3003	Starter
93857703	S3061	Starter
93858918	S3058R	Starter
93859136	S3061	Starter
93859444	S3024	Starter
94 1565 90	ARE2005	Regulator
94332581	A2026	Alternator
94332586	S2002	Starter
94382059	A2004	Alternator
94387653	S2010	Starter
94405044	A2028	Alternator
94433912	S6022	Starter
94448959	S6004	Starter
94449054	A2027	Alternator
94452739	A2027	Alternator
94471996	A2020	Alternator
9512769	S0231	Starter
9512794	A0066	Alternator
96627035	S0098	Starter
97041790	A2005	Alternator
97074611	A2025	Alternator
97112549	S6022	Starter
97113118	A2005	Alternator
97113770	A2004	Alternator
97117769	S2002	Starter
97133369	S2004	Starter
97133854	A2032	Alternator
97134762	A2025	Alternator
97134866	A2032	Alternator
97136688	S2010	Starter
97146338	S2010	Starter
97147851	A2025	Alternator
97150200	A2001	Alternator
97150201	A2016	Alternator
97150203	S2004	Starter
97150204	S2002	Starter
97187655	A2025	Alternator
97189112	A2011	Alternator
97189113	A2003	Alternator
97189118	S2001	Starter
97210505	S2010	Starter
97223653	S2010	Starter
97241021	A2001	Alternator
97326180	A2003	Alternator
97355198	A2038	Alternator
97369507	A2022	Alternator
97369508	A2022	Alternator
97386062	S2001	Starter
98014743	S2001	Starter
98056441	A2022	Alternator
98056867	A2003	Alternator
99224108	S0231	Starter
R1030105	A3111	Alternator
R1040032	S2004	Starter
R1040037	S0093	Starter
R1530024	A1011	Alternator
R1530037	A2003	Alternator
R1530041	A1010	Alternator
R1530043	A0171	Alternator
R1530052	A1001	Alternator
R1530098	A4042	Alternator
R1530099	A4048	Alternator
R1530100	A4073	Alternator
R1540010	S2001	Starter
R1540013	S0231	Starter
R1540015	S0093	Starter
R1610391	A1011	Alternator

ORME	AS	PRODUCT
A/1125	AR3001	Rotor
A/1169	AR3004	Rotor
A/1171	AR0013	Rotor
A/1181	AR3003	Rotor
A/234	AR4002	Rotor
A/310	AR2001	Rotor
A/321	AR2002	Rotor
A/355	AR4001	Rotor
A/365	AR4004	Rotor
A/626	AR0004	Rotor
A/670	AR0001	Rotor
A/686	AR0003	Rotor
A/709	AR0002	Rotor
CM143	SF0003	Starter field coil
CM144	SF0004	Starter field coil
CM148	SF0003	Starter field coil
CM149	SF0015	Starter field coil
CM152	SF0005	Starter field coil
CM156	SF0007	Starter field coil
CM158	SF0006	Starter field coil
CM179	SF0018	Starter field coil
CM180	SF0014	Starter field coil
CM409	SF1001	Starter field coil
CM420	SF1002	Starter field coil
IM105	SA0001	Starter armature
IM1103	SA0002	Starter armature
IM1108	SA0003	Starter armature
IM1119	SA0004	Starter armature
IM1125	SA0005	Starter armature
IM1126	SA0006	Starter armature
IM1127	SA0007	Starter armature
IM1133	SA0008	Starter armature
IM1136	SA0046	Starter armature
IM1137	SA0045	Starter armature
IM122	SA0009	Starter armature
IM124	SA0010	Starter armature
IM125	SA0043	Starter armature
IM126	SA0010	Starter armature
IM138	SA0048	Starter armature
IM149	SA0011	Starter armature
IM151	SA0012	Starter armature
IM152	SA0013	Starter armature
IM161	SA0014	Starter armature
IM162	SA0015	Starter armature
IM166	SA0016	Starter armature
IM175	SA0017	Starter armature
IM176	SA0018	Starter armature
IM177	SA0019	Starter armature
IM182	SA0015	Starter armature
IM183	SA0040	Starter armature
IM184	SA0020	Starter armature
IM185	SA0021	Starter armature
IM187	SA0022	Starter armature
IM190	SA0023	Starter armature
IM191	SA0024	Starter armature
IM200	SA0042	Starter armature
IM2000	SA4001	Starter armature
IM2001	SA4002	Starter armature

ORME	AS	PRODUCT
IM2002	SA4003	Starter armature
IM2003	SA4004	Starter armature
IM202	SA4013	Starter armature
IM2100	SA0025	Starter armature
IM2101	SA0035	Starter armature
IM2102	SA0026	Starter armature
IM2103	SA0026	Starter armature
IM2105	SA0044	Starter armature
IM2106	SA0027	Starter armature
IM2108	SA0044	Starter armature
IM2109	SA0029	Starter armature
IM2110	SA0030	Starter armature
IM2111	SA0031	Starter armature
IM2112	SA0032	Starter armature
IM2113	SA0033	Starter armature
IM2114	SA0034	Starter armature
IM2117	SA0036	Starter armature
IM2120	SA0037	Starter armature
IM2129	SA0038	Starter armature
IM2130	SA0047	Starter armature
IM2131	SA0053	Starter armature
IM2132	SA0049	Starter armature
IM2133	SA0039	Starter armature
IM2136	SA0041	Starter armature
IM2137	SA0050	Starter armature
IM2138	SA0052	Starter armature
IM2140	SA0055	Starter armature
IM218	SA4005	Starter armature
IM3000	SA2001	Starter armature
IM3003	SA6001	Starter armature
IM3006	SA2002	Starter armature
IM3007	SA2003	Starter armature
IM3009	SA9002	Starter armature
IM3010	SA6002	Starter armature
IM3011	SA2004	Starter armature
IM3013	SA5001	Starter armature
IM3017	SA2005	Starter armature
IM3018	SA1010	Starter armature
IM3019	SA1009	Starter armature
IM3023	SA6003	Starter armature
IM3026	SA5002	Starter armature
IM3027	SA2006	Starter armature
IM3032	SA2015	Starter armature
IM3034	SA2015	Starter armature
IM3035	SA2007	Starter armature
IM3037	SA2008	Starter armature
IM3038	SA2009	Starter armature
IM3040	SA5003	Starter armature
IM3041	SA5004	Starter armature
IM3042	SA5005	Starter armature
IM3043	SA5006	Starter armature
IM3044	SA2010	Starter armature
IM3045	SA5007	Starter armature
IM3046	SA5008	Starter armature
IM3047	SA5009	Starter armature
IM3050	SA6004	Starter armature
IM3056	SA2011	Starter armature
IM3059	SA2016	Starter armature
IM3061	SA5010	Starter armature
IM3062	SA2012	Starter armature
IM3063	SA2013	Starter armature
IM3064	SA1014	Starter armature
IM3065	SA1011	Starter armature
IM3066	SA9003	Starter armature
IM3067	SA6005	Starter armature
IM3069	SA6006	Starter armature
IM3071	SA5011	Starter armature
IM3074	SA2014	Starter armature
IM3076	SA9004	Starter armature
IM3079	SA5012	Starter armature
IM3081	SA5013	Starter armature
IM3085	SA9005	Starter armature
IM3088	SA5015	Starter armature
IM3091	SA9001	Starter armature
IM3094	SA5014	Starter armature
IM3096	SA5020	Starter armature
IM3115	SA1012	Starter armature
IM3116	SA5019	Starter armature
IM3121	SA9011	Starter armature
IM3126	SA0051	Starter armature
IM3127	SA3011	Starter armature
IM3128	SA3008	Starter armature
IM3129	SA3001	Starter armature
IM3131	SA5018	Starter armature
IM3136	SA2018	Starter armature
IM3138	SA5022	Starter armature
IM409	SA1001	Starter armature
IM410	SA1002	Starter armature
IM414	SA1003	Starter armature
IM416	SA1004	Starter armature
IM418	SA1005	Starter armature
IM419	SA1006	Starter armature
IM420	SA1007	Starter armature
IM421	SA1008	Starter armature
IM519	SA3002	Starter armature
IM536	SA3003	Starter armature
IM537	SA3003	Starter armature
IM539	SA3005	Starter armature
IM540	SA3006	Starter armature
IM542	SA3007	Starter armature
IM543	SA3009	Starter armature
IM7	SA4006	Starter armature
IM75	SA4012	Starter armature
IM87	SA4007	Starter armature
IM88	SA4008	Starter armature
IM92	SA4009	Starter armature
IM93	SA4018	Starter armature
IM96	SA4010	Starter armature
IM968	SA4011	Starter armature
P5315	AP4003	Pulley
S/128	AS3006	Stator
S/132	AS3003	Stator
S/136	AS3004	Stator
S/141	AS3002	Stator
S/146	AS3010	Stator
S/205	AS4004	Stator
S/2053	AS0005	Stator
S/209	AS4001	Stator
S/210	AS4004	Stator
S/3007	AS2001	Stator
S/3015	AS2002	Stator
S/3037	AS2006	Stator
S/3047	AS5003	Stator
S/3056	AS3008	Stator
S/3067	AS3007	Stator
S/356	AS4003	Stator
S/60	AS0004	Stator
S/601	AS0001	Stator
S/627	AS0012	Stator
S/628	AS0013	Stator
S/629	AS0018	Stator
S/66	AS0002	Stator
S/88	AS0006	Stator
S/96	AS0003	Stator

PERKINS	AS	PRODUCT
1850866	S0188	Starter
185086600	S0188	Starter
26410R	S9021	Starter
28710252	ARE4001	Regulator
28710253	ARC4002	Rectifier
2871A161	A4014	Alternator
2871A166	A4015	Alternator
2871A167	A4031	Alternator
2871A168	A4031	Alternator
28730188	SS4017	Starter solenoid
28730189	SS4017	Starter solenoid
2873A029	S4019	Starter
2873A030	S4013	Starter
2873A031	S4019	Starter
2873A102	S4011	Starter
2873A104	S4018	Starter
2873B055	S9021	Starter
2873B056	S4013	Starter
2873B057	S9021	Starter
2873B061	S4001	Starter
2873B071	S4013	Starter
2873B072	S4019	Starter
2873D201	S0198	Starter
2873D304	S0170	Starter
2873K404	S4029	Starter
2873K405	S4030	Starter

PEUGEOT	AS	PRODUCT
555711	A3013	Alternator
555836	S0084	Starter
555838	S0004	Starter
557291	A3012	Alternator
558098	S3032	Starter
5702A0	A3051	Alternator
5702A1	A3051	Alternator
5702A2	A5024	Alternator
5702A3	A3032	Alternator
5702A4	A3056	Alternator
5702A5	A5023	Alternator
5702A6	A3074	Alternator
5702A7	A3074	Alternator
5702C0	A3053	Alternator
5702C5	A3074	Alternator
5702C6	A3074	Alternator
5702C7	A5024	Alternator
5702C8	A5024	Alternator
5702C9	A3032	Alternator
5702E1	A0142	Alternator
5702E2	A0142	Alternator
5702E3	A0142	Alternator
5702E6	A3032	Alternator
5702E9	A0183	Alternator

PEUGEOT	AS	PRODUCT
5702F0	A3032	Alternator
5702F3	A3074	Alternator
5702F8	A0204	Alternator
5702F9	A0183	Alternator
5702H4	A3067	Alternator
5702J1	A4085	Alternator
5702J2	A4084	Alternator
570511	A3013	Alternator
57051J	A4052	Alternator
57051K	A3024	Alternator
57051P	A3096	Alternator
57051Q	A3096	Alternator
57051R	A3095	Alternator
57051T	A3095	Alternator
57051X	A4052	Alternator
57051Y	A4052	Alternator
57052B	A3017	Alternator
57052C	A3023	Alternator
57052F	A3020	Alternator
57052N	A3015	Alternator
57052P	A0163	Alternator
57052Q	A0081	Alternator
57054C	A3019	Alternator
57054E	A3041	Alternator
57054F	A3027	Alternator
57054H	A3032	Alternator
57054N	A4076	Alternator
57054Q	A3069	Alternator
57054U	A3017	Alternator
57054V	A3017	Alternator
57054W	A3023	Alternator
57054X	A3023	Alternator
57055A	A3032	Alternator
57055H	A3027	Alternator
57055J	A3027	Alternator
57055M	A4076	Alternator
57055N	A4076	Alternator
57055R	A3069	Alternator
57055T	A3032	Alternator
57055X	A4076	Alternator
57055Y	A4076	Alternator
57055Z	A3069	Alternator
57056C	A5024	Alternator
57056D	A3032	Alternator
57056E	A3056	Alternator
57056N	A5023	Alternator
57056P	A3074	Alternator
57056S	A4076	Alternator
57056T	A4076	Alternator
57056W	A3069	Alternator
57056X	A3069	Alternator
57056Y	A3032	Alternator
57056Z	A3032	Alternator
57058A	A5024	Alternator
57058C	A3032	Alternator
57058E	A3056	Alternator
57058F	A5023	Alternator
57058G	A3074	Alternator
57058H	A5023	Alternator
570590	A3005	Alternator
570591	A3012	Alternator
570593	A3012	Alternator
5705A8	A3093	Alternator
5705A9	A3093	Alternator
5705AA	A3051	Alternator
5705AC	A3074	Alternator
5705AE	A3093	Alternator
5705AF	A3053	Alternator
5705AL	A3074	Alternator
5705AN	A5024	Alternator
5705AP	A5024	Alternator
5705AQ	A3032	Alternator
5705AR	A0142	Alternator
5705AS	A0142	Alternator
5705AW	A3032	Alternator
5705C7	A5024	Alternator
5705CA	A0183	Alternator
5705CJ	A0204	Alternator
5705CW	A3032	Alternator
5705E1	A3020	Alternator
5705E3	A3021	Alternator
5705E4	A3016	Alternator
5705E5	A3039	Alternator
5705E7	A3057	Alternator
5705EA	A0200	Alternator
5705EJ	A0204	Alternator
5705EK	A0183	Alternator
5705EN	A3032	Alternator
5705ER	A3051	Alternator
5705ES	A3074	Alternator
5705EV	A3053	Alternator
5705EW	A3074	Alternator
5705EX	A0142	Alternator
5705EY	A0142	Alternator
5705F2	A3005	Alternator
5705F3	A3015	Alternator
5705FA	A3032	Alternator
5705FE	A3024	Alternator
5705FH	A3095	Alternator
5705FK	A4052	Alternator
5705FN	A0163	Alternator
5705FP	A0081	Alternator
5705FV	A3017	Alternator
5705FX	A3023	Alternator
5705GC	A3027	Alternator
5705GF	A4076	Alternator
5705GH	A3069	Alternator
5705GJ	A4076	Alternator
5705GL	A3069	Alternator
5705GN	A3032	Alternator
5705GV	A4007	Alternator
5705GW	A4049	Alternator
5705GZ	A5024	Alternator
5705H5	A3016	Alternator
5705H6	A3039	Alternator
5705H7	A3057	Alternator
5705HA	A5023	Alternator
5705HC	A3074	Alternator
5705HH	A3005	Alternator
5705HK	A3016	Alternator
5705HL	A3039	Alternator
5705HN	A3057	Alternator
5705HS	A3040	Alternator
5705HV	A3029	Alternator
5705HX	A3021	Alternator
5705HY	A3022	Alternator
5705J9	A3040	Alternator
5705JR	A3015	Alternator
5705JS	A3020	Alternator
5705K7	A3096	Alternator
5705KH	A4085	Alternator
5705KJ	A4084	Alternator
5705L1	A3029	Alternator
5705L6	A0163	Alternator
5705L7	A0163	Alternator
5705M6	A3040	Alternator
5705M7	A3040	Alternator
5705N0	A3029	Alternator
5705N1	A3029	Alternator
5705N5	A3021	Alternator
5705N6	A3016	Alternator
5705N7	A3057	Alternator
5705NH	A0142	Alternator
5705R2	A3012	Alternator
5705R5	A0163	Alternator
5705R6	A3022	Alternator
5705R7	A3022	Alternator
5705R9	A4053	Alternator
5705S0	A4049	Alternator
5705S3	A0081	Alternator
5705S4	A0081	Alternator
5705S5	A3095	Alternator
5705W6	A0081	Alternator
5705W7	A0081	Alternator
5705X9	A3020	Alternator
5705Y1	A3015	Alternator
574465	ARC3010	Rectifier
574491	ARC3005	Rectifier
576187	ARE3002	Regulator
580236	S0084	Starter
580264	S0132	Starter
580285	S0236	Starter
580292	S0084	Starter
5802A0	S3005	Starter
5802A8	S3031	Starter
5802A9	S3031	Starter
5802AA	S3029	Starter
5802AE	S3057	Starter
5802AF	S3057	Starter
5802AG	S3057	Starter
5802AL	S0121	Starter
5802AN	S0121	Starter
5802AQ	S0139	Starter
5802AZ	S3016	Starter
5802C2	S3005	Starter
5802C9	S3032	Starter
5802CC	S3005	Starter
5802CE	S3057	Starter
5802CG	S3032	Starter
5802CH	S3054	Starter
5802CL	S0017	Starter
5802CP	S3002	Starter
5802CR	S3019	Starter
5802CS	S0004	Starter
5802CV	S3056	Starter
5802CY	S3002	Starter

PEUGEOT	AS	PRODUCT
5802E0	S3031	Starter
5802E2	S0084	Starter
5802E4	S3009	Starter
5802E7	S3054	Starter
5802E8	S3032	Starter
5802EA	S0163	Starter
5802EF	S3027	Starter
5802EG	S3029	Starter
5802EP	S3032	Starter
5802EQ	S3002	Starter
5802ES	S3009	Starter
5802EY	S3023	Starter
5802EZ	S3023	Starter
5802F1	S3054	Starter
5802F6	S0017	Starter
5802FC	S0123	Starter
5802G4	S0017	Starter
5802H6	S0017	Starter
5802H8	S0084	Starter
5802J2	S3031	Starter
5802M3	S3002	Starter
5802M4	S3002	Starter
5802M5	S0017	Starter
5802M7	S3002	Starter
5802M9	S3019	Starter
5802N3	S3032	Starter
5802N4	S3056	Starter
5802P8	S3032	Starter
5802Q0	S3031	Starter
5802Q1	S3005	Starter
5802Q2	S3009	Starter
5802Q9	S3019	Starter
5802R3	S3019	Starter
5802R4	S3032	Starter
5802R6	S0004	Starter
5802R8	S3009	Starter
5802S3	S3002	Starter
5802S8	S0017	Starter
5802V4	S0064	Starter
5802V5	S3002	Starter
5802V6	S3002	Starter
5802V9	S3056	Starter
5802W0	S3056	Starter
5802W4	S3002	Starter
5802W7	S0163	Starter
5802W9	S3002	Starter
5802X6	S3007	Starter
5802X9	S0163	Starter
5802Y0	S0163	Starter
5802Y3	S3032	Starter
5802Y4	S3016	Starter
5802Y5	S3016	Starter
5802Y6	S3016	Starter
5802Y9	S4017	Starter
5802Z0	S0089	Starter
5802Z1	S4017	Starter
5802Z3	S0089	Starter
5802Z5	S3027	Starter
5802Z6	S3027	Starter
5802Z7	S3027	Starter
5802Z9	S3029	Starter
594545	IM0001	Ignition Module
594555	IM0001	Ignition Module
75491911	A3046	Alternator
75492505	A3046	Alternator
9150747780	S0004	Starter
9150747880	S0004	Starter
9150864480	S0004	Starter
9150864580	S0004	Starter
91536242	S3005	Starter
94531304	IM0001	Ignition Module
9453130480	IM0001	Ignition Module
9467560280	A3027	Alternator
9467560380	A3051	Alternator
95494138	A3046	Alternator
95495039	A3049	Alternator
95495512	A3013	Alternator
95508644	S0004	Starter
95514125	S0084	Starter
9555507680	S3027	Starter
95580176	A3046	Alternator
9558385480	S0236	Starter
95598734	A3046	Alternator
9559873580	A3049	Alternator
95607229	S0004	Starter
95607232	A3013	Alternator
95607234	S0084	Starter
95619192	A3013	Alternator
95619193	A3049	Alternator
95619197	S0236	Starter
95619682	A3046	Alternator
95624960	S3005	Starter
95632727	A3005	Alternator
95635804	A3046	Alternator
95656487	S3009	Starter
95667742	A3020	Alternator
95667747	A3015	Alternator
95667748	A3021	Alternator
95667749	A3021	Alternator
95667752	S3005	Starter
95667753	S3005	Starter
95667754	S3009	Starter
95668060	A3005	Alternator
95691093	A3049	Alternator
96028857	S3005	Starter
96035033	S3009	Starter
9603503580	S3002	Starter
9605062980	A3020	Alternator
9605219380	S3005	Starter
96054384	S3002	Starter
9608719280	S3005	Starter
9612256180	A3039	Alternator
9612259680	A3015	Alternator
9612264280	A3016	Alternator
9612264380	A3039	Alternator
9612264680	A3016	Alternator
9613496680	A3015	Alternator
9615519880	S3009	Starter
9617842980	A0163	Alternator
9617843180	A3096	Alternator
9617849180	A3022	Alternator
9617861380	A0081	Alternator
9618725080	S3032	Starter
9618946480	A3096	Alternator
9618952880	A3022	Alternator
9618961380	A0081	Alternator
9618961580	A0081	Alternator
9619916180	A3096	Alternator
9620332580	A3029	Alternator
9621158480	A3095	Alternator
9621191780	A0163	Alternator
9621308580	A3024	Alternator
9623727280	A3017	Alternator
9623727380	A3023	Alternator
9623727780	A3017	Alternator
9623727880	A3023	Alternator
9624141480	A0163	Alternator
9624141580	A3022	Alternator
9625382480	S0017	Starter
9625382780	S3002	Starter
9628925380	A3020	Alternator
9630080280	A3096	Alternator
9631318180	A0081	Alternator
9631318380	A0163	Alternator
9631318480	A3022	Alternator
9631318680	A3057	Alternator
9631324980	A4052	Alternator
9631325080	A4052	Alternator
9633292480	S3032	Starter
9633782580	A3032	Alternator
9635342080	A3027	Alternator
9635557780	A4076	Alternator
9635772780	A3017	Alternator
9635772880	A3023	Alternator
9636254180	A3051	Alternator
9636559780	S0163	Starter
9638275580	A3032	Alternator
9638275880	A3032	Alternator
9638276180	A4076	Alternator
9638543580	A5024	Alternator
9638543680	A3032	Alternator
9638543780	A3056	Alternator
9638544180	A5024	Alternator
9638544280	A3032	Alternator
9638544580	A3032	Alternator
9639362380	A3027	Alternator
9639396580	A5023	Alternator
9640088080	A5023	Alternator
9640623580	A3074	Alternator
9640825280	S3016	Starter
9640878780	A3051	Alternator
9641302580	A3051	Alternator
9641398480	A3032	Alternator
9642124980	A5023	Alternator
9642879480	A5024	Alternator
9642879680	A3032	Alternator
9642879780	A3056	Alternator
9642879980	A3032	Alternator
9642880380	A3017	Alternator
9642880480	A3023	Alternator
9643001680	A3105	Alternator
9644037180	A0142	Alternator
9644103580	A0142	Alternator
9644529680	A3067	Alternator
9644904680	A5024	Alternator
9645100680	S3029	Starter

PEUGEOT	AS	PRODUCT
9645907580	A3051	Alternator
9645907680	A3051	Alternator
9645907780	A3027	Alternator
9645907880	A3027	Alternator
9646049980	A3074	Alternator
9646065480	A0142	Alternator
9646321780	A0142	Alternator
9646321880	A0142	Alternator
9646476280	A3074	Alternator
9646477580	A3074	Alternator
9646679980	S3016	Starter
9646694080	S3057	Starter
9646972280	S3027	Starter
9647157980	S3027	Starter
9648111680	S3002	Starter
9648242180	S3027	Starter
9648644680	S3032	Starter
9649611780	A3032	Alternator
9649611880	A3032	Alternator
9649846780	A0183	Alternator
9650358580	A0142	Alternator
9650582080	A3067	Alternator
9651927480	A3032	Alternator
9652035480	A0204	Alternator
9653459080	A0204	Alternator
9654343080	A3032	Alternator
9656262780	S3002	Starter
9656299480	S3002	Starter
9656955880	A5024	Alternator
9656956080	A3032	Alternator
9656956280	A3032	Alternator
9657129680	A0204	Alternator
9658308780	S3032	Starter
9660055080	A3032	Alternator
9662854080	S3029	Starter
9662854180	S3057	Starter
9663528880	S3029	Starter
9664016980	S3016	Starter
9665067980	A3032	Alternator
9665577480	A5024	Alternator
9688268480	S3016	Starter
97530824	S3032	Starter
97531304	IM0001	Ignition Module
PIC	**AS**	**PRODUCT**
120-497	S9056	Starter
120-499	S9056	Starter
120-500A	S9056	Starter
120-6022	S9043	Starter
PININFARINA	**AS**	**PRODUCT**
93960694260	A0229	Alternator
POCLAIN	**AS**	**PRODUCT**
H0641523	S9043	Starter
POONG SUNG	**AS**	**PRODUCT**
02131-9020	A9032	Alternator
02131-9021	A9032	Alternator
02131-9110	A9035	Alternator
02131-9111	A9035	Alternator
02131-9112	A9035	Alternator
02131-9113	A9035	Alternator
02131-9310	A9035	Alternator
02131-9311	A9035	Alternator

POONG SUNG	AS	PRODUCT
03101-3030	S6004	Starter
03101-3050	S6002	Starter
03101-3170	S6024	Starter
03101-3190	S6024	Starter
03111-4040	S0016	Starter
03111-4041	S0016	Starter
03111-4140	S6008	Starter
031127090	S5048	Starter
031127091	S5048	Starter
031127092	S5048	Starter
72011-0740	AFP1001	FW pulley
PORSCHE	**AS**	**PRODUCT**
99760301200	A0227	Alternator
99760301201	A0227	Alternator
99760301202	A0227	Alternator
99760301203	A0227	Alternator
99760301206	A0227	Alternator
99760301207	A0227	Alternator
PRESTOLITE	**AS**	**PRODUCT**
11-40	ABE9038	Bearing
15-407	SS9021	Starter solenoid
25-1	ABE9004	Bearing
25-22	ABE9002	Bearing
25-24	ABE9001	Bearing
25-28	ABE9004	Bearing
25-73	ABE9004	Bearing
25-91	ABE9004	Bearing
59-186	SD0028	Drive
59-203	SD0029	Drive
59-205	SD0029	Drive
858320	S0092	Starter
MFY6201I	S1006	Starter
MFY6201K	S1006	Starter
MFY6401K	S1006	Starter
MFY6401L	S1006	Starter
MFY6601I	S1006	Starter
MFY6601K	S1006	Starter
PD-7A	SD0028	Drive
PD-8A	SD0029	Drive
PD-9A	SD0029	Drive
PP-8A	SD0029	Drive
SAS-4211Y	SS9021	Starter solenoid
PSA	**AS**	**PRODUCT**
574087	AFP0070	FW pulley
PSH	**AS**	**PRODUCT**
255.601.075	A9032	Alternator
555.570.220	A0214R	Alternator
REAL	**AS**	**PRODUCT**
20406002	S1014	Starter
20488001	S9057	Starter
20488003	S9056	Starter
RENARD	**AS**	**PRODUCT**
7500	ARD9002	Diode
7502	ARD9003	Diode
7700	ARD9035	Diode
RENAULT	**AS**	**PRODUCT**
0000434120	S3015	Starter
0025841044	S0075	Starter
0028115088	S3047	Starter
0028115089	S0022	Starter

RENAULT	AS	PRODUCT
215952732	IC9001	Ignition Coil
2526180A	IC9001	Ignition Coil
5000049122	S0003	Starter
5000080750	S0151	Starter
5000241522	SBR0003	Starter bracket
5000241777	S0003	Starter
5000270909	S0007	Starter
5000296466	S0022	Starter
5000296512	SBR0006	Starter bracket
5000297938	ARE3048	Regulator
5000587272	SD0157	Drive
5000592182	S0151	Starter
5000725698	A3001	Alternator
5000785288	S0022	Starter
5000785715	A3099R	Alternator
5000786512	A3099R	Alternator
5000789048	S0151	Starter
5000790629	S3047	Starter
5000791211	S0075	Starter
5000791383	S0022	Starter
5000811448	S1009	Starter
5000820869	ARE0032	Regulator
5000830093	ARE0032	Regulator
5001000061	S0001	Starter
5001011181	A3001	Alternator
5001014136	A3099R	Alternator
5001014142	A3099R	Alternator
5001014166	A3100R	Alternator
5001014178	A3001	Alternator
5001014181	A3001	Alternator
5001014196	S3047	Starter
5001014203	S0151	Starter
5001014215	S0151	Starter
5001014218	S3049	Starter
5001014221	S0075	Starter
5001014227	S0022	Starter
5001014230	S0127	Starter
5001014690	ARE3048	Regulator
5001822908	S3046	Starter
5001822955	S3046	Starter
5001824629	S3047	Starter
5001831086	S3048	Starter
5001831090	S3049	Starter
5001831925	ARE0032	Regulator
5001833946	A3100R	Alternator
5001847422	A5035	Alternator
5001847428	S5022	Starter
5001850054	AR0013	Rotor
5001853710	S5055	Starter
5001853716	S5030	Starter
5001859572	S0075	Starter
5001866291	A0138	Alternator
5010050717	A3100R	Alternator
5010058981	S3049	Starter
5010090370	S0075	Starter
5010090683	S0075	Starter
5010096027	S0022	Starter
5010142367	A3100R	Alternator
5010142768	A3100R	Alternator
5010149022	A3100R	Alternator
5010217010	S3046	Starter
5010217215	S0063	Starter

RENAULT	AS	PRODUCT
5010217532	S3048	Starter
5010217533	S3047	Starter
5010217956	S3049	Starter
5010217961	A0002	Alternator
5010235982	A3100R	Alternator
5010306413	S0075	Starter
5010306533	S5022	Starter
5010306538	A5035	Alternator
5010306592	S5027	Starter
5010306631	S5030	Starter
5010306710	A3030	Alternator
5010306777	S5055	Starter
5010306910	S5022	Starter
5010480227	A3030	Alternator
5010508379	S5055	Starter
5010508380	S5027	Starter
5010589525	A0138	Alternator
5010589551	A0139	Alternator
5010589555	A0138	Alternator
5830000132	S0022	Starter
5830000632	S0022	Starter
6001549062	S5053	Starter
6005003152	S9043	Starter
6005003153	S9043	Starter
6005011729	S9043	Starter
6005012976	S9056	Starter
6005701125	S9043	Starter
6006000076	A3001	Alternator
6025007592	A3026	Alternator
7000315522	S3039	Starter
7420409228	A0123	Alternator
7420466317	A0139	Alternator
7420523391	ARE0054	Regulator
7420853850	A0138	Alternator
7420862899	A0139	Alternator
7700026780	S9043	Starter
7700046893	S9043	Starter
7700100647	S3004	Starter
7700101274	A0044	Alternator
7700103386	S0059	Starter
7700104209	A3089	Alternator
7700104210	A3090	Alternator
7700104674	S3008	Starter
7700105119	S3008	Starter
7700105333	A3028	Alternator
7700105539	A3079	Alternator
7700106209	S3001	Starter
7700106426	S3052	Starter
7700106501	A3092	Alternator
7700106763	S3052	Starter
7700107177	IC9001	Ignition Coil
7700110616	AFP3018	FW pulley
7700113207	S3052	Starter
7700113208	S3052	Starter
7700113209	S3001	Starter
7700113357	IC9001	Ignition Coil
7700113357A	IC9001	Ignition Coil
7700113627	S3064	Starter
7700115294	S0225	Starter
7700115479	S3058R	Starter
7700116260	S3058R	Starter
7700116282	S5044	Starter
7700260935	A3038	Alternator
7700272482	S3015	Starter
7700273783	S3021	Starter
7700274178	S3021	Starter
7700274303	S3021	Starter
7700274351	S3021	Starter
7700300408	A3111	Alternator
7700300522	S5009	Starter
7700301993	S0127	Starter
7700308989	A0025	Alternator
7700313447	S5009	Starter
7700315522	S3039	Starter
7700352049	S3004	Starter
7700377051	S0099	Starter
7700377091	A0228	Alternator
7700416985	A3089	Alternator
7700421477	A0044	Alternator
7700422143	A3092	Alternator
7700424573	A3090	Alternator
7700424575	A3091	Alternator
7700424582	A3089	Alternator
7700424594	A3088	Alternator
7700424595	A3089	Alternator
7700424597	A3090	Alternator
7700426849	A3037	Alternator
7700427932	A0145	Alternator
7700429310	A0044	Alternator
7700431945	A3092	Alternator
7700434899	A0145	Alternator
7700434900	A0044	Alternator
7700436626	A3089	Alternator
7700436671	A3079	Alternator
7700437090	A3106	Alternator
7700501670	S9043	Starter
7700519797	S9043	Starter
7700525064	S9043	Starter
7700525547	S9043	Starter
7700555163	A3045	Alternator
7700572689	S3014	Starter
7700627394	S9043	Starter
7700650287	S3014	Starter
7700662371	A3045	Alternator
7700662415	A3045	Alternator
7700665613	S0183	Starter
7700694096	S3014	Starter
7700703490	S3015	Starter
7700710963	A3007	Alternator
7700714313	A3001	Alternator
7700721797	A3048	Alternator
7700721977	A3048	Alternator
7700729300	A3048	Alternator
7700730363	A3048	Alternator
7700730365	A3025	Alternator
7700730756	S0127	Starter
7700730759	S0127	Starter
7700734240	A3009	Alternator
7700735712	S3001	Starter
7700748171	A3001	Alternator
7700749023	A3043	Alternator
7700749226	A3014	Alternator
7700750305	S3014	Starter
7700750306	S3014	Starter
7700751337	A3048	Alternator
7700754832	A3046	Alternator
7700754833	A3007	Alternator
7700754835	A3002	Alternator
7700754850	A3002	Alternator
7700754852	A3044	Alternator
7700758217	S3015	Starter
7700758336	A3045	Alternator
7700773470	A3046	Alternator
7700784482	A3050	Alternator
7700784880	A3050	Alternator
7700784890	A3006	Alternator
7700784891	A3006	Alternator
7700784979	A3003	Alternator
7700786409	A3009	Alternator
7700793594	A3002	Alternator
7700796488	S3004	Starter
7700796907	A3026	Alternator
7700796914	A3044	Alternator
7700803325	A3011	Alternator
7700808647	A3044	Alternator
7700810256	A3009	Alternator
7700811399	A3026	Alternator
7700817232	A3011	Alternator
7700820449	A3010	Alternator
7700820794	A4008	Alternator
7700852395	A3008	Alternator
7700853827	S3004	Starter
7700854954	S3015	Starter
7700854955	S3004	Starter
7700856260	S3011	Starter
7700859724	A4008	Alternator
7700860915	S3052	Starter
7700862613	A3031	Alternator
7700864608	S3007	Starter
7700865213	S3001	Starter
7700865719	S3004	Starter
7700865985	S3030	Starter
7700866505	S3001	Starter
7700867631	S3011	Starter
7700867838	S3007	Starter
7700870818	A1014	Alternator
7700870951	S3011	Starter
7700871057	S3004	Starter
7700872258	A1014	Alternator
7700872348	A1014	Alternator
7700875000	IC9001	Ignition Coil
7700875450	S0225	Starter
7700972258	A1014	Alternator
7701007371	SBR0005	Starter bracket
7701048231	AR0013	Rotor
7701056687	S3024	Starter
7701065384	S2014	Starter
7701348311	A3045	Alternator
7701349264	S3015	Starter
7701349591	S3014	Starter
7701351026	S0183	Starter
7701351027	S3015	Starter
7701351390	S3004	Starter
7701351757	A3006	Alternator
7701351761	A3043	Alternator
7701351762	A3002	Alternator

RENAULT	AS	PRODUCT
7701351764	A3044	Alternator
7701351772	S3004	Starter
7701352045	A3010	Alternator
7701352047	A3011	Alternator
7701352050	S3052	Starter
7701352054	A3044	Alternator
7701352055	S0183	Starter
7701352125	A3001	Alternator
7701352126	S3011	Starter
7701352209	A4008	Alternator
7701352354	A3031	Alternator
7701353827	S3004	Starter
7701362052	A3001	Alternator
7701365469	A3045	Alternator
7701381535	A3001	Alternator
7701381647	S0127	Starter
7701474326	A0166	Alternator
7701474416	A3052	Alternator
7701475896	A0213	Alternator
7701476808	A0166	Alternator
7701477689	AFP3018	FW pulley
7701499203	A3045	Alternator
7701499230	A3048	Alternator
7701499237	A3046	Alternator
7701499247	S3015	Starter
7701499248	A3007	Alternator
7701499249	A3048	Alternator
7701499252	A3009	Alternator
7701499436	A3006	Alternator
7701499438	A3003	Alternator
7701499440	A3002	Alternator
7701499443	A3008	Alternator
7701499444	A3011	Alternator
7701499458	A3047	Alternator
7701499461	A3009	Alternator
7701499463	A3007	Alternator
7701499466	A3044	Alternator
7701499468	S3014	Starter
7701499482	S3015	Starter
7701499495	A3045	Alternator
7701499601	S3001	Starter
7701499615	S3030	Starter
7701499645	A3048	Alternator
7701499649	S3014	Starter
7702145739	A3007	Alternator
7702150654	A3006	Alternator
7704001096	A3046	Alternator
7707784890	A3050	Alternator
7709758174	S3015	Starter
7711134260	S3004	Starter
7711134267	A3079	Alternator
7711134297	S3064	Starter
7711134312	AFP3011	FW pulley
7711134316	A3037	Alternator
7711134530	S3008	Starter
7711134564	A0044	Alternator
7711134603	S3039	Starter
7711134618	A3111	Alternator
7711134753	A3106	Alternator
7711134758	A3063	Alternator
7711134793	S3059	Starter
7711134795	A1014	Alternator
7711134926	A3084R	Alternator
7711135112	A0166	Alternator
7711135332	A3068	Alternator
7711135333	A3034	Alternator
7711135502	S3028	Starter
7711135521	S5038	Starter
7711368323	S3024	Starter
7711497098	A0166	Alternator
7711497099	A5009	Alternator
8200018818	S3024	Starter
8200021396	S5038	Starter
8200022774	A3035	Alternator
8200030635	A0044	Alternator
8200040415	S3058R	Starter
8200049826	S3008	Starter
8200050150	S0225	Starter
8200054336	S3058R	Starter
8200054588	A3073	Alternator
8200064465	S3059	Starter
8200064465B	S3059	Starter
8200064685	A3077	Alternator
8200069377	S0223(BOSCH)	Starter
8200075362	S3058R	Starter
8200082782	S3008	Starter
8200086130	A3035	Alternator
8200086161	A3068	Alternator
8200086162	A3034	Alternator
8200100907	A3052	Alternator
8200103726	A0044	Alternator
8200106788	S3024	Starter
8200107686	A3073	Alternator
8200112065	A3063	Alternator
8200113636	AFP0014	FW pulley
8200120286	A5009	Alternator
8200121413	A3092	Alternator
8200122976	A0166	Alternator
8200130624	S3024	Starter
8200138269	A3084R	Alternator
8200143045	S3064	Starter
82001541086	IC9001	Ignition Coil
8200154186	IC9001	Ignition Coil
8200154186A	IC9001	Ignition Coil
8200162474	A3037	Alternator
8200175210	A0164	Alternator
8200182178	S3012	Starter
8200186144	S0225	Starter
8200186148	S0223(BOSCH)	Starter
8200190721	A0165	Alternator
8200193100	A3079	Alternator
8200199737	S0223(BOSCH)	Starter
82002008611	IC9001	Ignition Coil
8200208611	IC9001	Ignition Coil
8200225336	S3024	Starter
8200225806	A3084R	Alternator
8200227092	S5038	Starter
8200229907	A0167	Alternator
8200237594	S3028	Starter
8200240487	S5053	Starter
8200251007	S5035	Starter
8200262462	A0164	Alternator
8200266777	S3012	Starter
8200285128	S5035	Starter
8200290215	A3068	Alternator
8200290217	A3034	Alternator
8200290220	A3084R	Alternator
8200306595	S5035	Starter
8200325823	A0213	Alternator
8200331251	S3058R	Starter
8200360480	A0213	Alternator
8200373636	A5009	Alternator
8200380267	IC9001	Ignition Coil
8200386806	A3052	Alternator
8200390667	A0168	Alternator
8200390675	A0213	Alternator
8200392926	A3028	Alternator
8200399594	S5035	Starter
8200399801	AFP3017	FW pulley
8200402016	S3061	Starter
8200404300	A0165	Alternator
8200405098	IC9001	Ignition Coil
8200410681	A3103	Alternator
8200426577	S5038	Starter
8200438148	A0044	Alternator
8200458765	S3061	Starter
8200466763	S3052	Starter
8200489514	AFP3016	FW pulley
8200495269	A3084R	Alternator
8200495294	A3068	Alternator
8200495301	A3035	Alternator
8200495302	A3037	Alternator
8200495305	A3034	Alternator
8200538407	A3037	Alternator
8200538408	A3034	Alternator
8200538815	A3035	Alternator
8200548796	AFP3018	FW pulley
8200568535	S3061	Starter
8200568671	IC9001	Ignition Coil
8200584658	S5038	Starter
8200584664	S5053	Starter
8200584675	S5035	Starter
8200584685	S5038	Starter
8200584843	S5035	Starter
8200590255	A3035	Alternator
8200628426	S3058R	Starter
8200628430	S3061	Starter
8200634602	S3024	Starter
8200634603	S3024	Starter
8200634604	S3028	Starter
8200660033	A0213	Alternator
8200660035	A0165	Alternator
8200660040	A0044	Alternator
8200660044	A3106	Alternator
8200667603	A3052	Alternator
8200667608	A3052	Alternator
8200667614	A3103	Alternator
8200667617	A3084R	Alternator
8200667618	A3068	Alternator
8200690190	A3037	Alternator
8200692863	A0145	Alternator
8200692865	A0044	Alternator
8200692868	A0165	Alternator
8200692869	A0164	Alternator
8200728292	A0168	Alternator
8200765882	IC9001	Ignition Coil

RENAULT	AS	PRODUCT
8200772726	A3103	Alternator
8953002577	S0183	Starter
8982775029	A3003	Alternator
9627267180	S3056	Starter

ROMANIA (E/P)	AS	PRODUCT
DM2138	S9055	Starter

ROVER	AS	PRODUCT
AMR4248	A4032	Alternator
AMR5425	A4055	Alternator
AMR5425E	A4055	Alternator
BAU5816	ARC4011	Rectifier
ERR5009	S0042	Starter
GEU2255	A4067	Alternator
GNU2320	A4079	Alternator
GNU2336	A4054	Alternator
GNU2480	A5026	Alternator
GNU2521	A4064	Alternator
GNU2630	A0057	Alternator
GNU2632	A0057	Alternator
GNU4814	S0103	Starter
GNU4900	S0103	Starter
LBU5225	ARC4004	Rectifier
NAD000090	S4035	Starter
NAD100390	S0042	Starter
NAD100740	S0103	Starter
NAD100750	S0103	Starter
NAD101070	S0103	Starter
NAD101080	S0103	Starter
NAD101140	S6012	Starter
NAD101190	S0106	Starter
NAD101240	S6007	Starter
NAD101260	S0103	Starter
NAD101481	S0226	Starter
NAD101490	S0106	Starter
NAD101500	S6012	Starter
NAD500210	S0042	Starter
NAD500270	S0123	Starter
RTC5371	ARC4004	Rectifier
RTC5671	ARC4004	Rectifier
STC2227	A3076	Alternator
YLE000051	A3094	Alternator
YLE000070	A3087	Alternator
YLE10075	A4032	Alternator
YLE10083	A4054	Alternator
YLE10088	A4012	Alternator
YLE10105	A4013	Alternator
YLE10113	A4032	Alternator
YLE10113E	A4032	Alternator
YLE10128	A4079	Alternator
YLE10130	A4026	Alternator
YLE101520	A4020	Alternator
YLE101730	A5026	Alternator
YLE101790	A4064	Alternator
YLE101840	A4079	Alternator
YLE101850	A4026	Alternator
YLE101870	A4054	Alternator
YLE101880	A4026	Alternator
YLE101971	A6002	Alternator
YLE102200	A4013	Alternator
YLE102270	A6003	Alternator
YLE102280	A6002	Alternator

ROVER	AS	PRODUCT
YLE102290	A6003	Alternator
YLE102340	A6034	Alternator
YLE102360	A6003	Alternator
YLE102370	A6002	Alternator
YLE102370L	A6002	Alternator
YLE102400	A6036	Alternator
YLE102420	A0057	Alternator
YLE102430	A0057	Alternator
YLE102480	A6006	Alternator
YLE500170	A3070	Alternator
YLE500180	A3094	Alternator

ROVER GROUP	AS	PRODUCT
YLE000040	A0226	Starter

SAAB	AS	PRODUCT
12759595	A4082	Alternator
12759596	AFP6013	FW pulley
12762730	A0047	Alternator
12770125	AFP0060	FW pulley
12786853	AFP0054	FW pulley
4070428	S0034	Starter
4235610	S0034	Starter
4443750	SBR0014	Starter bracket
4670428	S0034	Starter
4739058	A0113	Alternator
4966842	S0034	Starter
4966847	S0034	Starter
5194758	S0126	Starter
5248372	A0196	Alternator
5340393	AFP0035	FW pulley
5470513	A0209	Alternator
5543814	AFP0035	FW pulley
8549495	A0113	Alternator
8826851	S0056	Starter
8828238	S0034	Starter
93169260	A4082	Alternator
93182514	AFP4002	FW pulley
9544537	S0036	Starter

SAME	AS	PRODUCT
296190300	S9052	Starter
296190800	S9052	Starter
296193600	S9052	Starter
296193700	S9052	Starter
29619390	S0113	Starter

SAS	AS	PRODUCT
1088	ARD9004	Diode

SAWAFUJI	AS	PRODUCT
0350-602-0118	S9040	Starter
1320-077-00X0	SA9004	Starter armature
1320-077-01X0	SA9004	Starter armature
1320-097-00X0	SA9005	Starter armature
6206-005-00X0	ABE9020	Bearing
6206-005-20X0	ABE9003	Bearing
6206-005-40X0	ABE9038	Bearing
6206-011-00X0	ABE9003	Bearing
6206-011-20X0	ABE9003	Bearing
6206-011-30X0	ABE9020	Bearing
6206-011-40X0	ABE9038	Bearing
8700-630-3400	ABE9006	Bearing

SCANIA	AS	PRODUCT
0518064	A0124	Alternator
0578064	A0137	Alternator
1105367	A0026	Alternator
1105368	A0025	Alternator
1117252	A0058	Alternator
1120616	ABR0001	Bracket
1332903	S0097	Starter
1335929	S0097	Starter
1336136	A0029	Alternator
1357709	S0024	Starter
1371679	A3018	Alternator
1377400	A3018	Alternator
1382290	S0109	Starter
1386966	ARE0032	Regulator
1394969	A0029	Alternator
1404788	S0197	Starter
1409378	A0029	Alternator
1409380	A0029	Alternator
1409778	A0029	Alternator
1409780	A0029	Alternator
1433688	A3018	Alternator
1433689	A3018	Alternator
1440768	A3018	Alternator
1440769	A3018	Alternator
1442788	A0124	Alternator
1447911	S0138	Starter
1447912	S0173	Starter
1475569	A0064	Alternator
1475570	A0124	Alternator
1501245	ARE0042	Regulator
1501246	ARE0042	Regulator
1502245	ARE0042	Regulator
1504316	A0064	Alternator
1777299	A0064	Alternator
183868	S0197	Starter
257592	A0058	Alternator
263356	S0197	Starter
2809251	A3018	Alternator
309220	S0220(BOSCH)R	Starter
310563	S0197	Starter
349575	S0065	Starter
349576	S0010	Starter
349578	S0220(BOSCH)R	Starter
349579	S0061	Starter
354858	A0058	Alternator
357736	A0058	Alternator
371972	A0058	Alternator
371973	A0058	Alternator
410676	A0058	Alternator
4434056	A0113	Alternator
549276	A3018	Alternator
571167	S0097	Starter
571168	S0024	Starter
571414	A0026	Alternator
571416	A0029	Alternator
571420	S0197	Starter
571427	S0024	Starter
571453	S0065	Starter
571454	S0010	Starter
571461	S0061	Starter
571462	S0097	Starter
571463	S0024	Starter
571464	S0109	Starter

SCANIA	AS	PRODUCT
571467	S0138	Starter
571468	S0173	Starter
571498	A0029	Alternator
571505	A0058	Alternator
571506	A0058	Alternator
571507	A0058	Alternator
571516	A0026	Alternator
571523	A3018	Alternator
571527	A3018	Alternator
571529	A3018	Alternator
571613	A0137	Alternator
571614	A0064	Alternator
SEV	**AS**	**PRODUCT**
300821	SVX7	Alt. Brush set
71215303	ARC3006	Rectifier
71215403	ARC3027	Rectifier
71216903	ARC3027	Rectifier
71770102	A3046	Alternator
71770202	A3046	Alternator
71900303	ABE9006	Bearing
SIDRA	**AS**	**PRODUCT**
SDK6201	S1014	Starter
SKF	**AS**	**PRODUCT**
60002RS1	ABE9019	Bearing
60012RS1	ABE9034	Bearing
60021BRDD	ABE9036	Bearing
60022RS1	ABE9020	Bearing
60032RS1	ABE9021	Bearing
60042RS1	ABE9035	Bearing
6082RS1	ABE9010	Bearing
62002RS1	ABE9001	Bearing
6200LH1A	ABE9036	Bearing
62012RS1	ABE9002	Bearing
62022RS1	ABE9003	Bearing
62022RS1C3	ABE9003	Bearing
6202LB	ABE9003	Bearing
6202LR	ABE9003	Bearing
6202NCD	ABE9030	Bearing
62032RS1	ABE9004	Bearing
62032RSC3	ABE9004	Bearing
6203BM	ABE9004	Bearing
62052RS1	ABE9038	Bearing
62201LRSX	ABE9007	Bearing
623042RS1	ABE9022	Bearing
6292RS1C3	ABE9042(NSK)	Bearing
630012Z	ABE9008	Bearing
63001ZZ	ABE9008	Bearing
6302	ABE9005	Bearing
63022RS1	ABE9005	Bearing
6302LH	ABE9005	Bearing
63032RS1	ABE9006	Bearing
6303B	ABE9006	Bearing
6303BM	ABE9006	Bearing
6303DU	ABE9006	Bearing
6303DW	ABE9006	Bearing
6303G	ABE9006	Bearing
6303LH	ABE9006	Bearing
63042RS1	ABE9040(NSK)	Bearing
6304DH8A	ABE9040(NSK)	Bearing
6304HBA	ABE9040(NSK)	Bearing
6304ZZ	ABE9040(NSK)	Bearing
65052RS1	ABE9038	Bearing

SKF	AS	PRODUCT
BB1-3036	ABE9039	Bearing
HK1210	ABE9045	Bearing
NU202ECP	ABE9033	Bearing
SKODA	**AS**	**PRODUCT**
441040092196	S0125	Starter
SMART	**AS**	**PRODUCT**
0002801V003	A4061	Alternator
0002801V004	A4061	Alternator
0002801V005	A4062	Alternator
0002801V006	A4062	Alternator
0003250V007	A4061	Alternator
0003250V008	A4061	Alternator
0003250V009	A4062	Alternator
0003250V010	A4062	Alternator
0003250V011	A4062	Alternator
0004717V005	A0223	Alternator
0004717V006	A0223	Alternator
Q0002801V0030 00000	A4061	Alternator
Q0002801V0040 00000	A4061	Alternator
Q0002801V0050 00000	A4062	Alternator
Q0002801V0060 00000	A4062	Alternator
Q0003250V0070 00000	A4061	Alternator
Q0003250V0080 00000	A4061	Alternator
Q0003250V0090 00000	A4062	Alternator
Q0003250V0100 00000	A4062	Alternator
Q0003250V0110 00000	A4062	Alternator
SPIDAN	**AS**	**PRODUCT**
0.001183	S9057	Starter
SSANG YONG	**AS**	**PRODUCT**
6611513101	S0016	Starter
6611513201	S0016	Starter
6611513401	S0016	Starter
6611513501	S0016	Starter
6611513901	S0016	Starter
STEMOT	**AS**	**PRODUCT**
03-011	SD1026	Drive
05-063	SD3041	Drive
05-066	SD3040	Drive
N-01.00	SDK0005	Dust Cover Kits
STEYR	**AS**	**PRODUCT**
207090002	S9052	Starter
SUBARU	**AS**	**PRODUCT**
23230-AA000	ARC2025	Rectifier
23300-AA020	S5023	Starter
23300-AA050	S5023	Starter
23300-AA190	S5023	Starter
23300-AA200	S5018	Starter
23300-AA210	S5023	Starter
23300-AA220	S5018	Starter
23300-AA221	S5018	Starter
23300-AA300	S5023	Starter
23300-AA390	S5023	Starter
23815-AA010	ARE2021	Regulator
23815-AA050	ARE2016	Regulator
23815-AA140	ARE5031	Regulator

SUBARU	AS	PRODUCT
23815-KA080	ARE6028	Regulator
23815-KA110	ARE5020	Regulator
23830-AA000	ARC2025	Rectifier
23830-AA030	ARC5039	Rectifier
23830-AA040	ARC2024	Rectifier
23830-AA070	ARC5048	Rectifier
23830-KA070	ARC5001	Rectifier
24370-56108	SA2014	Starter armature
28531-0680	SB6002	Sta. Brush set
31220-82230	SS5030	Starter solenoid
31320-78130	SD5015	Drive
31320-79010	SD6011	Drive
31320-80110	SD6011	Drive
37343-37506	SS2004	Starter solenoid
37343-G7002	SS2004	Starter solenoid
39210-3902	SS6001	Starter solenoid
39526-2511	AB2005	Alt. Brush set
39533-2511	AB2005	Alt. Brush set
42990-5600	A5028	Alternator
42990-6300	A5028	Alternator
42991-7300	S5023	Starter
42991-7310	S5023	Starter
42991-7500	S5023	Starter
49200-7212	SA6004	Starter armature
49206-5501	SB2002	Sta. Brush set
49206-5804	SB5001	Sta. Brush set
49207-1001	SB2002	Sta. Brush set
49207-5501	SB2002	Sta. Brush set
49207-5804	SB5001	Sta. Brush set
49209-7002	SD6013	Drive
49210-5602	SS6003	Starter solenoid
49210-6401	SS2013	Starter solenoid
49210-7002	SS6003	Starter solenoid
49243-7002	SB6002	Sta. Brush set
49534-7101	ARC2001	Rectifier
49575-7101	ARE2002	Regulator
89209-4112	SD6013	Drive
89209-6102	SD6013	Drive
89210-4122	SS6003	Starter solenoid
89511-6111	AB2005	Alt. Brush set
94208-2940	SB2002	Sta. Brush set
94208-300	SB2002	Sta. Brush set
SUZUKI	**AS**	**PRODUCT**
15425-63071	SA6005	Starter armature
15881-64601	ARE6028	Regulator
31100-51A90	S6018	Starter
31100-60A10	S5016	Starter
31100-60A11	S5016	Starter
31100-60A12	S5016	Starter
31100-60A13	S5016	Starter
31100-60A20	S5016	Starter
31100-60A22	S5016	Starter
31100-60AC2	S5016	Starter
31100-60AD0	S5016	Starter
31100-64B12	S5040	Starter
31100-64B13	S5040	Starter
31100-67J00	S3058R	Starter
31100-68D00	S5050	Starter
31100-75F00	S6016	Starter
31100-75F01	S6016	Starter
31100-75F10	S6016	Starter
31100-77E90	S6002	Starter

SUZUKI	AS	PRODUCT
31100-78021	S6018	Starter
31100-79J00	S0230	Starter
31100-81010	S6018	Starter
31100-82021	S5016	Starter
31100-83010	S5016	Starter
31100-83011	S5016	Starter
31100-83020	S5016	Starter
31100-83030	S5016	Starter
31100-83031	S5016	Starter
31100-83421	S5016	Starter
31100-84350	S6018	Starter
31100-84EC0	S3018	Starter
31100-85E00	S3018	Starter
31100-86030	S5040	Starter
31100-86032	S5040	Starter
31100-86033	S5040	Starter
31100-860D2	S5040	Starter
31100-86CB1	S0084	Starter
31100-A83010	S5016	Starter
31100-A83031	S5016	Starter
31100-M81110	S6018	Starter
31131-51A10	SB6007	Sta. Brush set
31152-56010	SBU9006	Bushing
31220-52A20	SS6005	Starter solenoid
31220-63210	SS6001	Starter solenoid
31220-70030	SS6001	Starter solenoid
31220-73010	SS6001	Starter solenoid
31220-74010	SS6001	Starter solenoid
31220-78210	SS6003	Starter solenoid
31220-82130	SS5002	Starter solenoid
31220-83020	SS5002	Starter solenoid
31220-84030	SS5002	Starter solenoid
31320-78310	SD6007	Drive
31320-79030	SD5004	Drive
31320-82130	SD5004	Drive
31400-65G00	A0163	Alternator
31400-68D02	A3051	Alternator
31400-73J00	A3074	Alternator
31400-80010	A5028	Alternator
31400-80011	A5028	Alternator
31400-85E00	A3055	Alternator
31400-T85E00	A3055	Alternator
31582-60A20	ABE9028	Bearing
31582-60A21	ABE9028	Bearing
31612-60A10	ABE9027	Bearing
31621-60A20	ARC5014	Rectifier
31631-78432	AB5003	Alt. Brush set
32500-85250	ARE6028	Regulator
32500-85251	ARE6028	Regulator
32500-85510	ARE6007	Regulator
32500-86511	ARE6019	Regulator
32A66-00600	S5004	Starter
32A66-10101	S5004	Starter
32A66-20601	S5004	Starter
33100-84350	S6018	Starter

THERMO KING	AS	PRODUCT
44-6676	SD2008	Drive
44-6681	SD2008	Drive
44-9143	ARE0050	Regulator

TOYOTA	AS	PRODUCT
23371-44071	AB6004	Alt. Brush set

TOYOTA	AS	PRODUCT
23371-63020	AB6005	Alt. Brush set
27060-0H070	A0224	Alternator
27060-0J020	A6013	Alternator
27060-0J040	A6013	Alternator
27060-0L020	A6025	Alternator
27060-0L021	A6025	Alternator
27060-0L20	AFP6005	FW pulley
27060-0N020	A6038	Alternator
27060-0N021-84	A6038	Alternator
27060-0Q010	A4085	Alternator
27060-0Q011	A4085	Alternator
27060-0Q020	A4084	Alternator
27060-0Q021	A4084	Alternator
27060-11170	A6009	Alternator
27060-11270	A6009	Alternator
27060-11280	A6009	Alternator
27060-11281	A6009	Alternator
27060-11340	A6009	Alternator
27060-15080	A6012	Alternator
27060-15090	A6012	Alternator
27060-15100	A6012	Alternator
27060-15120	A6012	Alternator
27060-15130	A6012	Alternator
27060-15140	A6012	Alternator
27060-16122	A6017	Alternator
27060-16160	A6017	Alternator
27060-16170	A6017	Alternator
27060-16230	A6017	Alternator
27060-16260	A6017	Alternator
27060-17120	A6004	Alternator
27060-17180	A6005	Alternator
27060-17230	A6035	Alternator
27060-21020	A6028	Alternator
27060-21030	A6033	Alternator
27060-21031	A6033	Alternator
27060-21140	A6033	Alternator
27060-23030	A6001	Alternator
27060-27040	A6027	Alternator
27060-27060	A6007	Alternator
27060-27070	A6027	Alternator
27060-27090	A6007	Alternator
27060-27100	A6027	Alternator
27060-28070	A0224	Alternator
27060-28160	A0224	Alternator
27060-28260	A0224	Alternator
27060-30010	A6025	Alternator
27060-30020	A6025	Alternator
27060-30040	A6025	Alternator
27060-30050	A6025	Alternator
27060-33020	A6037	Alternator
27060-33040	A6015	Alternator
27060-33050	A6023	Alternator
27060-33051	A6023	Alternator
27060-33060	A6023	Alternator
27060-33071	A6038	Alternator
27060-33072	A6038	Alternator
27060-55070	A6009	Alternator
27060-58020	A6016	Alternator
27060-58090	A6016	Alternator
27060-72010	ARC6005	Rectifier
27060-73020	A6005	Alternator
27060-76070	A6032	Alternator

TOYOTA	AS	PRODUCT
27060-76080	A6032	Alternator
27060-78001-71	A6022R	Alternator
27060-78301-71	A6020	Alternator
27060-87Z06	A6024	Alternator
27060-96001	A6022R	Alternator
27060-YV020	A3074	Alternator
27357-16310	ARC6012	Rectifier
27357-43100	ARC6006	Rectifier
27357-43110	ARC6006	Rectifier
27357-46130	ARC6006	Rectifier
27357-55080	ARC6002	Rectifier
27357-62040	ARC6002	Rectifier
27357-63020	ARC6005	Rectifier
27357-63060	ARC6005	Rectifier
27357-70081	ARC6001	Rectifier
27357-70091	ARC6009	Rectifier
27357-72120	ARC6023	Rectifier
27357-72150	ARC6023	Rectifier
27357-74050	ARC6002	Rectifier
27357-74160	ARC6002	Rectifier
27357-74260	ARC6011	Rectifier
27357-87702	ARC6008	Rectifier
27370-42010	ABH6002	A. Brush holder
27370-45060	ABH6002	A. Brush holder
27370-75060	ABH6002	A. Brush holder
27371-31011	AB6001	Alt. Brush set
27371-44070	AB6002	Alt. Brush set
27371-44071	AB6004	Alt. Brush set
27371-54412	AB6003	Alt. Brush set
27371-56070	AB6003	Alt. Brush set
27371-63020	AB6005	Alt. Brush set
27375-72150	ARC6023	Rectifier
27411-33050	AFP6011	FW pulley
27415-0L030	AFP6005	FW pulley
27415-0W010A	AFP6017	FW pulley
27415-0W010B	AFP6017	FW pulley
27415-0W010C	AFP6017	FW pulley
27415-0W0130	AFP6017	FW pulley
27415-0W040	AFP6014	FW pulley
27415-0W041	AFP6014	FW pulley
27415-27011	AFP6010	FW pulley
27415-30020	AFP6005	FW pulley
27415-33010	AFP6011	FW pulley
27700-01010	ARE6001	Regulator
27700-10050	ARE6008	Regulator
27700-10061	ARE6001	Regulator
27700-10080	ARE6008	Regulator
27700-11030	ARE6001	Regulator
27700-11050	ARE6001	Regulator
27700-11060	ARE6031	Regulator
27700-11070	ARE6013	Regulator
27700-15030	ARE6016	Regulator
27700-20090	ARE6039	Regulator
27700-20100	ARE6039	Regulator
27700-22011	ARE6016	Regulator
27700-35040	ARE6002	Regulator
27700-36020	ARE6016	Regulator
27700-40050	ARE6002	Regulator
27700-46060	ARE6014	Regulator
27700-50020	ARE6033	Regulator
27700-50030	ARE6033	Regulator
27700-54050	ARE6001	Regulator

TOYOTA	AS	PRODUCT
27700-54060	ARE6033	Regulator
27700-57060	ARE6003	Regulator
27700-58020	ARE6021	Regulator
27700-62010	ARE6014	Regulator
27700-63020	ARE6001	Regulator
27700-63021	ARE6001	Regulator
27700-64030	ARE6003	Regulator
27700-64040	ARE6017	Regulator
27700-64110	ARE6017	Regulator
27700-65010	ARE6002	Regulator
27700-66040	ARE6013	Regulator
27700-70030	ARE6020	Regulator
27700-72040	ARE6001	Regulator
27700-72041	ARE6001	Regulator
27700-74010	ARE6012	Regulator
27700-74030	ARE6002	Regulator
27700-74040	ARE6033	Regulator
27700-75030	ARE6002	Regulator
27700-87207	ARE6028	Regulator
27700-96301	ARE6028	Regulator
28011-0B020	SD0130	Drive
28011-0D030	SD0149	Drive
28011-0G010	SD0126	Drive
28011-10011	SD6001	Drive
28011-10030	SD6008	Drive
28011-13060	SD6032	Drive
28011-15010	SD6002	Drive
28011-1690	SD6001	Drive
28011-20540	SD6003	Drive
28011-20571	SD6003	Drive
28011-21010	SD6001	Drive
28011-26042	SD6003	Drive
28011-40014	SD6001	Drive
28011-40021	SD6001	Drive
28011-41010	SD6001	Drive
28011-41011	SD6001	Drive
28011-41012	SD6001	Drive
28011-41020	SD6002	Drive
28011-45011	SD6001	Drive
28011-45020	SD6002	Drive
28011-54070	SD6019	Drive
28011-54380	SD6024	Drive
28011-55050	SD6024	Drive
28011-60010	SD6002	Drive
28011-60040	SD6002	Drive
28011-60041	SD6002	Drive
28011-64010	SD6018	Drive
28011-64030	SD6018	Drive
28011-64130	SD6024	Drive
28011-70020	SD6016	Drive
28011-76070	SD6027	Drive
28011-87505	SD6017	Drive
28011-87704	SD6013	Drive
28017-19500	SP6010	Solenoids parts
28017-19502	SP6001	Solenoids parts
28017-19511	SP6018	Solenoids parts
28017-19512	SP6002	Solenoids parts
28100-02040	S0238	Starter
28100-02060	S6014	Starter
28100-02080	S0238	Starter
28100-05801	S6013	Starter
28100-0B010	S0020	Starter

TOYOTA	AS	PRODUCT
28100-0B020	S0020	Starter
28100-0D030	S0168	Starter
28100-0D130	S0168	Starter
28100-0G010	S0020	Starter
28100-0G020	S0020	Starter
28100-0H060	S6029	Starter
28100-0H061	S6029	Starter
28100-0H110	S6029	Starter
28100-0Q012	S0121	Starter
28100-0Q021	S0121	Starter
28100-0T030	S0121	Starter
28100-1090C	S6006	Starter
28100-1442	S6006	Starter
28100-1443	S6006	Starter
28100-16010	S6020	Starter
28100-16040	S6020	Starter
28100-16041	S6020	Starter
28100-16070	S6020	Starter
28100-16071	S6020	Starter
28100-16180	S6014	Starter
28100-16270	S6014	Starter
28100-17020	S6026	Starter
28100-17030	S6026	Starter
28100-22040	S0168	Starter
28100-22060	S6010	Starter
28100-22060-71	S6010	Starter
28100-22061	S6010	Starter
28100-22061-71	S6010	Starter
28100-22071	S6010	Starter
28100-23810-71	S6009	Starter
28100-28041	S6029	Starter
28100-30050	S6021	Starter
28100-30060	S6011	Starter
28100-30080	S6021	Starter
28100-33040	S6032	Starter
28100-33050	S6028	Starter
28100-33070	S6032	Starter
28100-33080	S6032	Starter
28100-34060	S6009	Starter
28100-34080	S6009	Starter
28100-34100	S6009	Starter
28100-35020	S6009	Starter
28100-35030	S6009	Starter
28100-54070	S6001	Starter
28100-54100	S6001	Starter
28100-54110	S6001	Starter
28100-54170	S6001	Starter
28100-54180	S6001	Starter
28100-54230	S6001	Starter
28100-54290	S6001	Starter
28100-54350	S6001	Starter
28100-54400	S6001	Starter
28100-67050	S6011	Starter
28100-67070	S6021	Starter
28100-72010	S6013	Starter
28100-72030	S6013	Starter
28100-72060	S6013	Starter
28100-72080	S6013	Starter
28100-72100	S6013	Starter
28100-75010	S6019	Starter
28100-75070	S6019	Starter
28100-87213	S6020	Starter

TOYOTA	AS	PRODUCT
28100-YV010	S3016	Starter
28100-YV020	S3029	Starter
28111-51010	SBU9032	Bushing
28111-51011	SBU9032	Bushing
28140-15010	SB6002	Sta. Brush set
28140-34030	SB6001	Sta. Brush set
28140-54070	SB6003	Sta. Brush set
28140-77090	SB6006	Sta. Brush set
28142-34030	SB6001	Sta. Brush set
28142-70020	SB6007	Sta. Brush set
28142-70200	SB6007	Sta. Brush set
28150-10020	SS6009	Starter solenoid
28150-12030	SS6002	Starter solenoid
28150-12031	SS6002	Starter solenoid
28150-15010	SS6003	Starter solenoid
28150-15011	SS6003	Starter solenoid
28150-15012	SS6003	Starter solenoid
28150-15013	SS6003	Starter solenoid
28150-22011	SS6001	Starter solenoid
28150-23010	SS6002	Starter solenoid
28150-23011	SS6002	Starter solenoid
28150-24011	SS6001	Starter solenoid
28150-24060	SS6001	Starter solenoid
28150-24061	SS6001	Starter solenoid
28150-24070	SS6001	Starter solenoid
28150-24071	SS6001	Starter solenoid
28150-25010	SS6001	Starter solenoid
28150-25013	SS6001	Starter solenoid
28150-25032	SS6001	Starter solenoid
28150-31050	SS6002	Starter solenoid
28150-31051	SS6002	Starter solenoid
28150-33020	SS6001	Starter solenoid
28150-33021	SS6001	Starter solenoid
28150-34070	SS6001	Starter solenoid
28150-36050	SS6002	Starter solenoid
28150-37010	SS6003	Starter solenoid
28150-41011	SS6001	Starter solenoid
28150-41020	SS6002	Starter solenoid
28150-60040	SS6001	Starter solenoid
28150-60060	SS6002	Starter solenoid
28150-87203	SS6001	Starter solenoid
28150-87208	SS6005	Starter solenoid
28150-87704	SS6003	Starter solenoid
28160-1560	SA9005	Starter armature
28160-26070	SA6004	Starter armature
28160-54070	SA6005	Starter armature
28160-54071	SA6005	Starter armature
28160-77090	SA6002	Starter armature
28160-87705	SA6005	Starter armature
28211-51011	SBU9032	Bushing
28226-54380	SP6017	Solenoids parts
28235-54070	SP6007	Solenoids parts
90099-10137	ABE9040(NSK)	Bearing
90099-10140	ABE9016	Bearing
90099-10141	ABE9005	Bearing
90099-10152	ABE9023	Bearing
90099-10154	ABE9036	Bearing
90099-10159	ABE9005	Bearing
90099-10165	ABE9004	Bearing
90099-10192	ABE9024	Bearing

TRANSPO	AS	PRODUCT
02179001	ASL9005	Slip ring

TRANSPO	AS	PRODUCT
02179002	ASL9006	Slip ring
02179003	ASL9008	Slip ring
05179005	ASL9012	Slip ring
07179003	ASL9011	Slip ring
11179002	ASL9003	Slip ring
11179003	ASL9004	Slip ring
14179001	ASL9014	Slip ring
15179001	ASL9016	Slip ring
18179002	ASL9001	Slip ring
18179003	ASL9002	Slip ring
18179006	ASL9007	Slip ring
18179007	ASL9010	Slip ring
18179009	ASL9009	Slip ring
20179001	ASL9017	Slip ring
6-205-4W	ABE9038	Bearing
629-2RS	ABE9042(NSK)	Bearing
6303-2LH	ABE9028	Bearing
6304-2RS	ABE9040(NSK)	Bearing
6333-2RS	ABE9024	Bearing
6336-2RS	ABE9017	Bearing
6348-2RS	ABE9031	Bearing
6382-2RS	ABE9026	Bearing
8010	ARD9001	Diode
8015	ARD9002	Diode
8025	ARD9003	Diode
8030	ARD9004	Diode
8224	ARD9005	Diode
8234	ARD9005	Diode
8235	ARD9014	Diode
8252	ARD9006	Diode
8253	ARD9015	Diode
8440	ARD9009	Diode
8441	ARD9018	Diode
8454	ARD9010	Diode
8455	ARD9019	Diode
8466	ARD9008	Diode
8467	ARD9017	Diode
8624	ARD9045	Diode
8625	ARD9046	Diode
8631	ARD9023	Diode
8661	ARD9027	Diode
8724	ARD9035	Diode
8725	ARD9036	Diode
8734	ARD9037	Diode
8735	ARD9038	Diode
8752	ARD9039	Diode
8753	ARD9040	Diode
8824	ARD9043	Diode
8825	ARD9044	Diode
8960	ARD9053	Diode
8961	ARD9054	Diode
8980	ARD9059	Diode
8981	ARD9060	Diode
8991	ARD9060	Diode
B1046-2RS	ABE9013	Bearing
B1050-2RS	ABE9015	Bearing
B805-2RS	ABE9027	Bearing
B806-2RS	ABE9016	Bearing
B811-2RS	ABE9032	Bearing
B814-2RS	ABE9018	Bearing
B874-2RS	ABE9011	Bearing
B879-2RS	ABE9012	Bearing
B885-2RS	ABE9014	Bearing
BM130	IM0003	Ignition Module
BM340	IM0001	Ignition Module
D10	ARE1001	Regulator
D101	ARE1001	Regulator
D101HD	ARE1001	Regulator
D200	ARE1027	Regulator
D200HD	ARE1027	Regulator
D202	ARE1028	Regulator
D202XHD	ARE1028	Regulator
D2198	ARE1026	Regulator
D30	ARE1002	Regulator
D30S	ARE1002	Regulator
D401	ARE1011	Regulator
D403	ARE1012	Regulator
D408	ARE1007	Regulator
D408D	ARE1007	Regulator
D411	ARE1003	Regulator
D411-1	ARE1003	Regulator
D411HAL	ARE1003	Regulator
D411HD	ARE1003	Regulator
D411HD-1	ARE1003	Regulator
D411SC	ARE1003	Regulator
D412	ARE1013	Regulator
D413	ARE1014	Regulator
D424	ARE1008	Regulator
D425	ARE1016	Regulator
D432	ARE1017	Regulator
D432D	ARE1017	Regulator
D445	ARE1014	Regulator
D4476	ARE1024	Regulator
D702	ARE1004	Regulator
D702-1	ARE1004	Regulator
D703	ARE1019	Regulator
D712	ARE1013	Regulator
D734	ARE1019	Regulator
D752	ARE1003	Regulator
D940	ARE1025	Regulator
DE605	ARE1009	Regulator
DE606	ARE1010	Regulator
DE607-1	ARE1001	Regulator
DE608	ARE1022	Regulator
DE701	ARE1005	Regulator
DE708	ARE1006	Regulator
DER1003	ARC1025	Rectifier
DER1004	ARC1022	Rectifier
DER2000	ARC1002	Rectifier
DER2010	ARC1003	Rectifier
DET524	ARC1001	Rectifier
DM1961	IM1001	Ignition Module
DM1978	IM1002	Ignition Module
DR4000	ARC1005	Rectifier
DR4000-1	ARC1005	Rectifier
DR4001	ARC1005	Rectifier
DR4100HD	ARC1005	Rectifier
DR4150HD	ARC1006	Rectifier
DR4200	ARC1006	Rectifier
DR4200-1	ARC1006	Rectifier
DR4200HD	ARC1006	Rectifier
DR4400	ARC1004	Rectifier
DR5040	ARC1007	Rectifier
DR5042-1	ARC1007	Rectifier
DR5045	ARC1009	Rectifier
DR5050	ARC1010	Rectifier
DR5050-1	ARC1010	Rectifier
DR5052	ARC1010	Rectifier
DR5080	ARC1012	Rectifier
DR5080-1	ARC1012	Rectifier
DR5082	ARC1012	Rectifier
DR5082HD	ARC1012	Rectifier
DR5165	ARC1019	Rectifier
DR5166	ARC1020	Rectifier
DR5173	ARC1014	Rectifier
DR5174	ARC1015	Rectifier
DR5175	ARC1016	Rectifier
DR5176	ARC1017	Rectifier
DR5177	ARC1018	Rectifier
DR9411	ARC1023	Rectifier
F600	ARE9015	Regulator
F601	ARE9033	Regulator
F601HD	ARE9033	Regulator
F602	ARE9016	Regulator
F603	ARE9017	Regulator
F606	ARE9034	Regulator
F610	ARE9035	Regulator
F611	ARE9026	Regulator
F784	ARE9003	Regulator
F784B	ARE9009	Regulator
F784HD	ARE9009	Regulator
F785	ARE9004	Regulator
F786	ARE9010	Regulator
F794	ARE9005	Regulator
F794B	ARE9011	Regulator
F794HD	ARE9011	Regulator
F795	ARE9012	Regulator
F796	ARE9013	Regulator
F798	ARE9014	Regulator
FR1040	ARC9002	Rectifier
FR1046	ARC9002	Rectifier
FR1070	ARC9001	Rectifier
FR1080	ARC9002	Rectifier
FR1083	ARC9001	Rectifier
FR1085	ARC9001	Rectifier
FR1270	ARC9005	Rectifier
FR1280	ARC9006	Rectifier
FR1290	ARC9007	Rectifier
FR1292	ARC9007	Rectifier
FR1292B	ARC9007	Rectifier
FR192	ARC9009	Rectifier
FR192HD	ARC9009	Rectifier
FR192XHD	ARC9009	Rectifier
FR201	ARC9010	Rectifier
FR202	ARC9011	Rectifier
FR202SP	ARC9011	Rectifier
FR300	ARC9012	Rectifier
FR600	ARC9013	Rectifier
FR600SP	ARC9013	Rectifier
FR601	ARC9014	Rectifier
FR602	ARC9015	Rectifier
FR602SP	ARC9015	Rectifier
IB160	ARE0067	Regulator
IB200	ARE0055	Regulator
IB201	ARE0044	Regulator
IB206	ARE0013	Regulator

TRANSPO	AS	PRODUCT
IB220	ARE0009	Regulator
IB225	ARE0008	Regulator
IB229	ARE0041	Regulator
IB231	ARE0012	Regulator
IB235	ARE0040	Regulator
IB236	ARE0045	Regulator
IB239	ARE0018	Regulator
IB247	ARE0058	Regulator
IB251	ARE0051	Regulator
IB252	ARE0052	Regulator
IB255	ARE0060	Regulator
IB266	ARE0066	Regulator
IB276	ARE0063	Regulator
IB283	ARE0043	Regulator
IB286	ARE0057	Regulator
IB297	ARE0054	Regulator
IB298	ARE0042	Regulator
IB347	ARE0059	Regulator
IB348	ARE0020	Regulator
IB350	ARE0001	Regulator
IB351	ARE0019	Regulator
IB352	ARE0002	Regulator
IB353	ARE0014	Regulator
IB354	ARE0016	Regulator
IB355	ARE0003	Regulator
IB356	ARE0004	Regulator
IB357	ARE0047	Regulator
IB358	ARE0001	Regulator
IB360	ARE0021	Regulator
IB360-1	ARE0021	Regulator
IB362	ARE0005	Regulator
IB363	ARE0022	Regulator
IB363-1	ARE0022	Regulator
IB364	ARE0023	Regulator
IB364-1	ARE0023	Regulator
IB365	ARE0024	Regulator
IB365-1	ARE0024	Regulator
IB368	ARE0021	Regulator
IB368-1	ARE0021	Regulator
IB369	ARE0026	Regulator
IB369-1	ARE0026	Regulator
IB370	ARE0001	Regulator
IB371	ARE0031	Regulator
IB373A	ARE0047	Regulator
IB374	ARE0027	Regulator
IB374-1	ARE0027	Regulator
IB376	ARE0015	Regulator
IB376-1	ARE0015	Regulator
IB378	ARE0047	Regulator
IB379-1	ARE0027	Regulator
IB380	ARE0028	Regulator
IB381	ARE0032	Regulator
IB382	ARE0032	Regulator
IB385	ARE0006	Regulator
IB386	ARE0035	Regulator
IB387	ARE0007	Regulator
IB388	ARE0011	Regulator
IB391	ARE0049	Regulator
IB392	ARE0050	Regulator
IB399	ARE0037	Regulator
IB400	ARE0071	Regulator
IB501	ARE0033	Regulator
IB511	ARE0039	Regulator
IB512	ARE0017	Regulator
IB520	ARE0046	Regulator
IB543	ARE0053	Regulator
IB545	ARE0010	Regulator
IB558	ARE0056	Regulator
IB6026	ARE0061(BOSCH)	Regulator
IBR201	ARC0043	Rectifier
IBR202	ARC0044	Rectifier
IBR215	ARC0065	Rectifier
IBR223	ARC0048	Rectifier
IBR226	ARC0055	Rectifier
IBR266	ARC0052	Rectifier
IBR301	ARC0001	Rectifier
IBR302	ARC0002	Rectifier
IBR303	ARC0003	Rectifier
IBR304	ARC0004	Rectifier
IBR305HD	ARC0003	Rectifier
IBR307	ARC0061	Rectifier
IBR308	ARC0039	Rectifier
IBR311	ARC0005	Rectifier
IBR313	ARC0006	Rectifier
IBR314	ARC0007	Rectifier
IBR315	ARC0008	Rectifier
IBR316	ARC0009	Rectifier
IBR317	ARC0037	Rectifier
IBR318	ARC0045	Rectifier
IBR319	ARC0010	Rectifier
IBR320	ARC0011	Rectifier
IBR321	ARC0012	Rectifier
IBR322	ARC0063	Rectifier
IBR325	ARC0013	Rectifier
IBR326	ARC0014	Rectifier
IBR329	ARC0015	Rectifier
IBR336	ARC0022	Rectifier
IBR337	ARC0022	Rectifier
IBR340	ARC0016	Rectifier
IBR341	ARC0017	Rectifier
IBR350	ARC0018	Rectifier
IBR351	ARC0019	Rectifier
IBR353	ARC0020	Rectifier
IBR354	ARC0021	Rectifier
IBR355	ARC0022	Rectifier
IBR357	ARC0023	Rectifier
IBR40011	ARC0057	Rectifier
IBR501	ARC0046	Rectifier
IBR547	ARC0038	Rectifier
IBR550	ARC0038	Rectifier
IBR590	ARC0024	Rectifier
IBR667	ARC0062	Rectifier
IBR712	ARC0026	Rectifier
IBR713	ARC0027	Rectifier
IBR720	ARC0028	Rectifier
IBR753	ARC0050	Rectifier
IBR844	ARC0029	Rectifier
IBR852	ARC0030	Rectifier
IBR860	ARC0056	Rectifier
IBR882	ARC0031	Rectifier
IBR904	ARC0032	Rectifier
IBR954	ARC0034	Rectifier
IBR954A	ARC0034	Rectifier
IBR955	ARC0035	Rectifier
IBR989	ARC0036	Rectifier
ID1010	ARE3018	Regulator
IH201	ARE2002	Regulator
IH202	ARE2002	Regulator
IH205	ARE2001	Regulator
IH210	ARE2002	Regulator
IH210HD	ARE2002	Regulator
IH212	ARE2003	Regulator
IH237	ARE2028	Regulator
IH238	ARE2020	Regulator
IH239	ARE2029	Regulator
IH242	ARE2012	Regulator
IH245	ARE2027	Regulator
IH247	ARE2021	Regulator
IH248	ARE2013	Regulator
IH249	ARE2023	Regulator
IH252	ARE2004	Regulator
IH252V	ARE2004	Regulator
IH253	ARE2005	Regulator
IH253V	ARE2007	Regulator
IH254	ARE2006	Regulator
IH254V	ARE2006	Regulator
IH716	ARE2005	Regulator
IH738	ARE2025	Regulator
IH760	ARE2014	Regulator
IH761	ARE2015	Regulator
IH762	ARE2022	Regulator
IH765	ARE2016	Regulator
IH766	ARE2011	Regulator
IH767	ARE2017	Regulator
IH769	ARE2008	Regulator
IH772	ARE2018	Regulator
IH774	ARE2019	Regulator
IH776	ARE2009	Regulator
IH782	ARE2026	Regulator
IHR603	ARC2001	Rectifier
IHR603HD	ARC2001	Rectifier
IHR604	ARC2002	Rectifier
IHR604HD	ARC2002	Rectifier
IHR605	ARC2001	Rectifier
IHR606	ARC2001	Rectifier
IHR607	ARC2004	Rectifier
IHR607-1	ARC2004	Rectifier
IHR709	ARC2005	Rectifier
IHR710	ARC2005	Rectifier
IHR710HD	ARC2005	Rectifier
IHR711	ARC2006	Rectifier
IHR712	ARC2007	Rectifier
IHR712HD	ARC2007	Rectifier
IHR713	ARC2008	Rectifier
IHR717	ARC2026	Rectifier
IHR717HD	ARC2026	Rectifier
IHR721	ARC2009	Rectifier
IHR721-1	ARC2009	Rectifier
IHR721HD-1	ARC2009	Rectifier
IHR722	ARC2005	Rectifier
IHR723	ARC2011	Rectifier
IHR723HD	ARC2011	Rectifier
IHR724	ARC2025	Rectifier
IHR727	ARC2012	Rectifier
IHR728	ARC2013	Rectifier
IHR730	ARC2023	Rectifier

TRANSPO	AS	PRODUCT
IHR732	ARC2015	Rectifier
IHR733	ARC2014	Rectifier
IHR734	ARC2015	Rectifier
IHR745	ARC2021	Rectifier
IHR746	ARC2021	Rectifier
IHR749	ARC2016	Rectifier
IHR749AV	ARC2016	Rectifier
IHR750	ARC2024	Rectifier
IHR751	ARC2017	Rectifier
IHR753	ARC2031	Rectifier
IHR754	ARC2018	Rectifier
IHR755	ARC2019	Rectifier
IHR757	ARC2019	Rectifier
IHR758	ARC2031	Rectifier
IHR769	ARC2020	Rectifier
IHR773	ARC2022	Rectifier
IK401	ARE9007	Regulator
IK543	ARE9008	Regulator
IL223	ARE4001	Regulator
IL225	ARE4002	Regulator
IL225-1	ARE4002	Regulator
ILR166	ARC4010	Rectifier
ILR566	ARC4002	Rectifier
ILR566HD	ARC4002	Rectifier
ILR567	ARC4003	Rectifier
ILR567HD	ARC4002	Rectifier
ILR568	ARC4004	Rectifier
ILR568HD	ARC4004	Rectifier
ILR569	ARC4011	Rectifier
ILR569HD	ARC4011	Rectifier
ILR570	ARC4005	Rectifier
ILR570HD	ARC4005	Rectifier
ILR571	ARC4002	Rectifier
ILR573	ARC4002	Rectifier
ILR576	ARC4006	Rectifier
ILR576HD	ARC4006	Rectifier
IM204	ARE5001	Regulator
IM204-1	ARE5001	Regulator
IM204HD-1	ARE5001	Regulator
IM205	ARE5002	Regulator
IM210	ARE5014	Regulator
IM212	ARE5003	Regulator
IM216	ARE5004	Regulator
IM216-1	ARE5004	Regulator
IM216HD	ARE5004	Regulator
IM216HD-1	ARE5004	Regulator
IM217	ARE5005	Regulator
IM217-1	ARE5005	Regulator
IM217HD	ARE5005	Regulator
IM225	ARE5032	Regulator
IM232	ARE5012	Regulator
IM262	ARE5026	Regulator
IM263	ARE5026	Regulator
IM265	ARE5011	Regulator
IM265-1	ARE5011	Regulator
IM265HD	ARE5011	Regulator
IM268	ARE5027	Regulator
IM270	ARE5028	Regulator
IM274	ARE5029	Regulator
IM277	ARE5015	Regulator
IM278	ARE5016	Regulator
IM279	ARE5033	Regulator
IM280	ARE5018	Regulator
IM281	ARE5006	Regulator
IM282	ARE5030	Regulator
IM290	ARE5025	Regulator
IM292	ARE5034	Regulator
IM341	ARE5035	Regulator
IM345	ARE5019	Regulator
IM362	ARE5040	Regulator
IM369	ARE5020	Regulator
IM465	ARE5042	Regulator
IM498	ARE5038	Regulator
IM505	ARE5054	Regulator
IM529	ARE5055	Regulator
IM545	ARE5051	Regulator
IM757	ARE5007	Regulator
IM830	ARE5008	Regulator
IM831	ARE5013	Regulator
IM832	ARE5020	Regulator
IM837	ARE5018	Regulator
IM839	ARE5045	Regulator
IM843	ARE5039	Regulator
IM845	ARE5021	Regulator
IM846	ARE5009	Regulator
IM847	ARE5010	Regulator
IM848	ARE5031	Regulator
IM850	ARE5022	Regulator
IM851	ARE5047	Regulator
IM854	ARE5017	Regulator
IMR10040	ARC5037	Rectifier
IMR10042	ARC5038	Rectifier
IMR10044	ARC5039	Rectifier
IMR10048	ARC5040	Rectifier
IMR10050	ARC5041	Rectifier
IMR10057	ARC5042	Rectifier
IMR10060	ARC5059	Rectifier
IMR10062	ARC5043	Rectifier
IMR10064	ARC5044	Rectifier
IMR10066	ARC5045	Rectifier
IMR10068	ARC5046	Rectifier
IMR10070	ARC5043	Rectifier
IMR10072	ARC5058	Rectifier
IMR10096	ARC5047	Rectifier
IMR6540	ARC5001	Rectifier
IMR6542	ARC5002	Rectifier
IMR6548	ARC5003	Rectifier
IMR7542	ARC5053	Rectifier
IMR7544	ARC5004	Rectifier
IMR7546	ARC5004	Rectifier
IMR7548	ARC5006	Rectifier
IMR7550	ARC5007	Rectifier
IMR7552	ARC5054	Rectifier
IMR7554	ARC5056	Rectifier
IMR7556	ARC5008	Rectifier
IMR7558	ARC5009	Rectifier
IMR7560	ARC5055	Rectifier
IMR7562	ARC5010	Rectifier
IMR7564	ARC5011	Rectifier
IMR7570	ARC5057	Rectifier
IMR7572	ARC5012	Rectifier
IMR7582	ARC5052	Rectifier
IMR7586	ARC5013	Rectifier
IMR7596	ARC5014	Rectifier
IMR8011	ARC5015	Rectifier
IMR8041	ARC5016	Rectifier
IMR8043	ARC5017	Rectifier
IMR8045	ARC5018	Rectifier
IMR8047	ARC5019	Rectifier
IMR85100	ARC5048	Rectifier
IMR85104	ARC5049	Rectifier
IMR85106	ARC5050	Rectifier
IMR8511	ARC5020	Rectifier
IMR8540	ARC5021	Rectifier
IMR8541	ARC5022	Rectifier
IMR8542	ARC5023	Rectifier
IMR8543	ARC5022	Rectifier
IMR8544	ARC5024	Rectifier
IMR8545	ARC5025	Rectifier
IMR8546	ARC5026	Rectifier
IMR8548	ARC5027	Rectifier
IMR8566	ARC5028	Rectifier
IMR85668	ARC5061	Rectifier
IMR8570	ARC5029	Rectifier
IMR8572	ARC5030	Rectifier
IMR8574	ARC5031	Rectifier
IMR8580	ARC5032	Rectifier
IMR8582	ARC5032	Rectifier
IMR8588	ARC5034	Rectifier
IMR8590	ARC5035	Rectifier
IMR8594	ARC5036	Rectifier
IN218	ARE6003	Regulator
IN220	ARE6001	Regulator
IN220SEA	ARE6020	Regulator
IN221	ARE6004	Regulator
IN222	ARE6018	Regulator
IN224	ARE6022	Regulator
IN225	ARE6005	Regulator
IN226	ARE6006	Regulator
IN227	ARE6007	Regulator
IN233	ARE6046	Regulator
IN250	ARE6008	Regulator
IN251	ARE6009	Regulator
IN253	ARE6019	Regulator
IN254	ARE6028	Regulator
IN256	ARE6010	Regulator
IN257	ARE6031	Regulator
IN258	ARE6041	Regulator
IN277	ARE6035	Regulator
IN304	ARE6036	Regulator
IN317	ARE6037	Regulator
IN429	ARE6023	Regulator
IN431	ARE6011	Regulator
IN434	ARE6012	Regulator
IN436	ARE6020	Regulator
IN437	ARE6013	Regulator
IN439	ARE6002	Regulator
IN440	ARE6025	Regulator
IN441	ARE6014	Regulator
IN444	ARE6024	Regulator
IN445	ARE6015	Regulator
IN447	ARE6034	Regulator
IN449	ARE6032	Regulator
IN450	ARE6030	Regulator
IN453	ARE6033	Regulator
IN455	ARE6027	Regulator

TRANSPO	AS	PRODUCT
IN461	ARE6021	Regulator
IN551	ARE6016	Regulator
IN6004	ARE6048	Regulator
IN6301	ARE6039	Regulator
IN6335	ARE6047	Regulator
IN6343	ARE6038	Regulator
IN6366	ARE6049	Regulator
IN6601	ARE6040	Regulator
IN920	ARE6017	Regulator
INR401	ARC6001	Rectifier
INR402	ARC6002	Rectifier
INR403	ARC6003	Rectifier
INR421	ARC6021	Rectifier
INR422	ARC6024	Rectifier
INR431	ARC6019	Rectifier
INR432	ARC6022	Rectifier
INR437	ARC6020	Rectifier
INR718	ARC6004	Rectifier
INR720	ARC6005	Rectifier
INR720-1	ARC6005	Rectifier
INR722	ARC6006	Rectifier
INR723	ARC6007	Rectifier
INR724	ARC6023	Rectifier
INR725	ARC6008	Rectifier
INR726	ARC6009	Rectifier
INR727	ARC6010	Rectifier
INR728	ARC6010	Rectifier
INR729	ARC6011	Rectifier
INR731	ARC6012	Rectifier
INR732	ARC6013	Rectifier
INR733	ARC6014	Rectifier
INR734	ARC6010	Rectifier
INR735	ARC6016	Rectifier
INR736	ARC6017	Rectifier
INR739	ARC6018	Rectifier
IP125	ARE3003	Regulator
IP126	ARE3048	Regulator
IP129B	ARE3013	Regulator
IP152	ARE3004	Regulator
IP1639	ARE3011	Regulator
IP1652	ARE3004	Regulator
IP1926	ARE3014	Regulator
IP729B	ARE3025	Regulator
IPR103	ARC3027	Rectifier
IPR135	ARC3001	Rectifier
IPR157	ARC3002	Rectifier
IPR203	ARC3003	Rectifier
IPR227	ARC3026	Rectifier
IPR252	ARC3004	Rectifier
IPR342	ARC3019	Rectifier
IPR537	ARC3003	Rectifier
IPR539	ARC3006	Rectifier
IPR551	ARC3007	Rectifier
IPR554	ARC3027	Rectifier
IPR615	ARC3017	Rectifier
IPR713	ARC3008	Rectifier
IPR713HD	ARC3008	Rectifier
IPR747	ARC3009	Rectifier
IPR773	ARC3025	Rectifier
IPR813	ARC3010	Rectifier
IPR844	ARC3011	Rectifier
IPR846	ARC3012	Rectifier

TRANSPO	AS	PRODUCT
IPR847	ARC3013	Rectifier
IPR848	ARC3035	Rectifier
IPR906	ARC3022	Rectifier
IPR908	ARC3022	Rectifier
IR673	ARE9001	Regulator
IX106	ARE4009	Regulator
IX110	ARE4003	Regulator
IX111	ARE4006	Regulator
IX111-1	ARE4006	Regulator
IX118	ARE4007	Regulator
IX121	ARE4004	Regulator
IX123	ARE4005	Regulator
IX127	ARE4008	Regulator
IX128	ARE4010	Regulator
IX131	ARE4011	Regulator
IX131HD	ARE4011	Regulator
IX595	ARE4012	Regulator
IX699	ARC4001	Rectifier
IX700	ARC4001	Rectifier
IXR542	ARC4012	Rectifier
IXR633	ARC4014	Rectifier
IXR634	ARC4007	Rectifier
IXR642	ARC4016	Rectifier
IXR691	ARC4023	Rectifier
IXR692	ARC4008	Rectifier
IXR692-1	ARC4009	Rectifier
IXR693	ARC4009	Rectifier
IXR693-1	ARC4009	Rectifier
IXR704	ARC4017	Rectifier
IXR719	ARC4013	Rectifier
IXR726	ARC4015	Rectifier
IXR7595	ARC4016	Rectifier
IY028	ARE5044	Regulator
IY058	ARE9006	Regulator
IY094	ARE9020	Regulator
IY422	ARE9002	Regulator
IY510	ARE9022	Regulator
IY794	ARE9025	Regulator
IY903	ARE5044	Regulator
IYR751	ARC9020	Rectifier
IYR8510	ARC5048	Rectifier
M5-244A	SD0019	Drive
M5-763	ARE3017	Regulator
M5-763A	ARE3017	Regulator
M5-765	ARE3017	Regulator
M506	ARE3001	Regulator
M507	ARE3021	Regulator
M508	ARE3021	Regulator
M509	ARE3053	Regulator
M510	ARE3050	Regulator
M511	ARE3002	Regulator
M512	ARE3009	Regulator
M513	ARE3005	Regulator
M514	ARE3006	Regulator
M515	ARE3036	Regulator
M516	ARE3016	Regulator
M517	ARE3007	Regulator
M519	ARE3019	Regulator
M521	ARE3010	Regulator
M523	ARE3038	Regulator
M527	ARE3023	Regulator
M537	ARE3024	Regulator

TRANSPO	AS	PRODUCT
M546	ARE3029	Regulator
M557	ARE3008	Regulator
M561	ARE3054	Regulator
M562	ARE3030	Regulator
M564	ARE3020	Regulator
MER108	ARC3036	Rectifier
MER109	ARC3020	Rectifier
MER1920	ARC3024	Rectifier
MER528	ARC3039	Rectifier
MER592	ARC3021	Rectifier
MM817	IM5001	Ignition Module
MP291	ARE9018	Regulator
MP293	ARE9019	Regulator
MP541	ARE9018	Regulator
W6001-2RS	ABE9008	Bearing
W6201-2RS	ABE9007	Bearing
XM640	IM4001	Ignition Module
`IBR834	ARC0041	Rectifier

TTV	AS	PRODUCT
910430	S9057	Starter
911020	S9043	Starter

UNIPOINT	AS	PRODUCT
ALT-1410	A1014	Alternator
AM-0116	SA5010	Starter armature
AM-2003	SA0026	Starter armature
AM-2018	SA0033	Starter armature
AM-2028	SA0047	Starter armature
AM-2030	SA0032	Starter armature
AM-2050	SA0025	Starter armature
AM-2102	SA0031	Starter armature
AM-2103	SA0031	Starter armature
AM-2200	SA0027	Starter armature
AM-2201	SA0027	Starter armature
AM-2214	SA0044	Starter armature
AM-2217	SA0030	Starter armature
AM-2311	SA0039	Starter armature
AM-2351	SA0045	Starter armature
AM-2601	SA1014	Starter armature
AM-2801	SA9003	Starter armature
AM-3001	SA5011	Starter armature
AM-3301	SA2010	Starter armature
AM-3308	SA2010	Starter armature
AM-3501	SA5013	Starter armature
AM-4322	SA1002	Starter armature
AM-5001	SA6005	Starter armature
AM-6008	SA2001	Starter armature
AM-6020	SA2002	Starter armature
AM-6032	SA2011	Starter armature
AM-6035	SA5004	Starter armature
AM-6052	SA6003	Starter armature
AM-6103	SA2015	Starter armature
AM-6138	SA5003	Starter armature
AM-6150	SA6002	Starter armature
AM-7030	SA5012	Starter armature
AM-7051	SA1009	Starter armature
AM-7107	SA5015	Starter armature
AM-7131	SA5015	Starter armature
AM-7150	SA1010	Starter armature
AM-7900	SA5020	Starter armature
AM-9103	SA6006	Starter armature
B-0305	SDK0003	Dust Cover Kits
B-220314	SF0013	Starter field coil

UNIPOINT	AS	PRODUCT
BH-1300	ABH1003	A. Brush holder
BH-1400	ABH1005	A. Brush holder
BH-1407A	ABH1004	A. Brush holder
BH-1501	ABH1007	A. Brush holder
BH-1806	ABH9001	A. Brush holder
BH-601	ABH6001	A. Brush holder
BH-631	ABH6001	A. Brush holder
BH-635	ABH6002	A. Brush holder
BH-657	ABH6002	A. Brush holder
BH-689	ABH2001	A. Brush holder
D-037	ARC5035	Rectifier
DIO-010	ARC1001	Rectifier
IM-B16	IM0003	Ignition Module
LE-2003	SL0001	Levers
ORC-0009	AFP0026	FW pulley
ORC-0010	AFP0054	FW pulley
ORC-0016	AFP0013	FW pulley
P-3014	SP6008	Solenoids parts
P-500127	SP6007	Solenoids parts
P-501627	SP6009	Solenoids parts
P-8310	SS6011	Starter solenoid
P-911307	SS6010	Starter solenoid
REC-110	ARC9005	Rectifier
REC-111	ARC9001	Rectifier
REC-112	ARC9002	Rectifier
REC-113	ARC9002	Rectifier
REC-115	ARC1007	Rectifier
REC-116	ARC1010	Rectifier
REC-120	ARC1012	Rectifier
REC-201	ARC0003	Rectifier
REC-202	ARC0004	Rectifier
REC-203	ARC0005	Rectifier
REC-204	ARC0011	Rectifier
REC-205	ARC0012	Rectifier
REC-206	ARC0063	Rectifier
REC-207	ARC0001	Rectifier
REC-208	ARC0002	Rectifier
REC-209	ARC0009	Rectifier
REC-210	ARC0037	Rectifier
REC-214	ARC0012	Rectifier
REC-215	ARC0063	Rectifier
REC-217	ARC0062	Rectifier
REC-219	ARC0039	Rectifier
REC-220	ARC0039	Rectifier
REC-2203	ARC0006	Rectifier
REC-2204	ARC0007	Rectifier
REC-2205	ARC0008	Rectifier
REC-2206	ARC0010	Rectifier
REC-221	ARC0015	Rectifier
REC-233	ARC0018	Rectifier
REC-234	ARC0019	Rectifier
REC-236	ARC0020	Rectifier
REC-237	ARC0021	Rectifier
REC-238	ARC0022	Rectifier
REC-239	ARC0023	Rectifier
REC-240	ARC0026	Rectifier
REC-241	ARC0029	Rectifier
REC-242	ARC0030	Rectifier
REC-243	ARC0031	Rectifier
REC-253	ARC0016	Rectifier
REC-262	ARC0041	Rectifier
REC-2806	ARC0048	Rectifier
REC-351	ARC4023	Rectifier
REC-352	ARC4008	Rectifier
REC-353	ARC4009	Rectifier
REC-500	ARC5046	Rectifier
REC-501	ARC5044	Rectifier
REC-502	ARC5045	Rectifier
REC-549	ARC5016	Rectifier
REC-549L	ARC5016	Rectifier
REC-550	ARC5018	Rectifier
REC-550L	ARC5018	Rectifier
REC-551	ARC5017	Rectifier
REC-551L	ARC5017	Rectifier
REC-552	ARC5020	Rectifier
REC-552L	ARC5020	Rectifier
REC-554	ARC5022	Rectifier
REC-554L	ARC5022	Rectifier
REC-555	ARC5025	Rectifier
REC-555L	ARC5025	Rectifier
REC-556	ARC5019	Rectifier
REC-557	ARC5037	Rectifier
REC-562	ARC5028	Rectifier
REC-564	ARC5036	Rectifier
REC-565	ARC5035	Rectifier
REC-567	ARC5008	Rectifier
REC-568	ARC5021	Rectifier
REC-5691	ARC5048	Rectifier
REC-570	ARC5053	Rectifier
REC-571	ARC5038	Rectifier
REC-572	ARC5012	Rectifier
REC-574	ARC5006	Rectifier
REC-575	ARC5007	Rectifier
REC-576	ARC5054	Rectifier
REC-577	ARC5056	Rectifier
REC-578	ARC5009	Rectifier
REC-5781	ARC5010	Rectifier
REC-579	ARC5055	Rectifier
REC-580	ARC5010	Rectifier
REC-581	ARC5011	Rectifier
REC-584	ARC5007	Rectifier
REC-586	ARC5023	Rectifier
REC-587	ARC5024	Rectifier
REC-588	ARC5026	Rectifier
REC-589	ARC5027	Rectifier
REC-590	ARC5027	Rectifier
REC-592	ARC5031	Rectifier
REC-594	ARC5032	Rectifier
REC-597	ARC5042	Rectifier
REC-598	ARC5034	Rectifier
REC-5991	ARC5047	Rectifier
REC-613	ARC6010	Rectifier
REC-6131	ARC6006	Rectifier
REC-614	ARC6013	Rectifier
REC-6201	ARC9016	Rectifier
REC-631	ARC6005	Rectifier
REC-633	ARC6001	Rectifier
REC-635	ARC6002	Rectifier
REC-636	ARC6003	Rectifier
REC-638	ARC6002	Rectifier
REC-644	ARC6004	Rectifier
REC-645	ARC6009	Rectifier
REC-646	ARC6008	Rectifier
REC-648	ARC6002	Rectifier
REC-649	ARC6011	Rectifier
REC-650	ARC2028	Rectifier
REC-651	ARC2016	Rectifier
REC-653	ARC2021	Rectifier
REC-656	ARC2020	Rectifier
REC-657	ARC2009	Rectifier
REC-661	ARC2002	Rectifier
REC-661L	ARC2002	Rectifier
REC-662	ARC2006	Rectifier
REC-662L	ARC2006	Rectifier
REC-663	ARC2011	Rectifier
REC-663L	ARC2011	Rectifier
REC-664	ARC2007	Rectifier
REC-664L	ARC2007	Rectifier
REC-665	ARC2005	Rectifier
REC-665L	ARC2005	Rectifier
REC-666	ARC2004	Rectifier
REC-666L	ARC2004	Rectifier
REC-667	ARC2001	Rectifier
REC-667L	ARC2001	Rectifier
REC-668	ARC2012	Rectifier
REC-668L	ARC2012	Rectifier
REC-669	ARC2013	Rectifier
REC-669L	ARC2013	Rectifier
REC-672	ARC2025	Rectifier
REC-673	ARC2023	Rectifier
REC-675	ARC2014	Rectifier
REC-676	ARC2015	Rectifier
REC-678	ARC2008	Rectifier
REC-684	ARC2017	Rectifier
REC-686	ARC2024	Rectifier
REC-687	ARC2019	Rectifier
REC-691	ARC2019	Rectifier
REC-699	ARC2027	Rectifier
REC-822	ARC4010	Rectifier
REC-831	ARC4002	Rectifier
REC-832	ARC4003	Rectifier
REC-833	ARC4004	Rectifier
REC-834	ARC4005	Rectifier
REC-883	ARC1025	Rectifier
REC-884	ARC1022	Rectifier
REC-901	ARC3027	Rectifier
REC-902	ARC3002	Rectifier
REC-903	ARC3001	Rectifier
REC-904	ARC3003	Rectifier
REC-905	ARC3026	Rectifier
REC-906	ARC3004	Rectifier
REC-907	ARC3019	Rectifier
REC-908	ARC3005	Rectifier
REC-909	ARC3006	Rectifier
REC-910	ARC3007	Rectifier
REC-912	ARC3017	Rectifier
REC-913	ARC3025	Rectifier
REC-914	ARC3009	Rectifier
REC-916	ARC3011	Rectifier
REC-918	ARC3012	Rectifier
REC-919	ARC3035	Rectifier
REC-920	ARC3021	Rectifier
REC-930	ARC3021	Rectifier
REC-956	ARC1016	Rectifier
REC-957	ARC1017	Rectifier
REC-980A	ARC1002	Rectifier

UNIPOINT	AS	PRODUCT
REC-980AX	ARC1002	Rectifier
REC-981	ARC1021	Rectifier
REC-991	ARC1005	Rectifier
REC-991A	ARC1005	Rectifier
REC-991AX	ARC1005	Rectifier
REC-992	ARC1006	Rectifier
REC-992A	ARC1006	Rectifier
REC-992AX	ARC1006	Rectifier
REC-F11	ARC9009	Rectifier
REC-F11H	ARC9009	Rectifier
REC-F12	ARC9009	Rectifier
REC-F14	ARC9013	Rectifier
REC-F15	ARC9010	Rectifier
REC-F16	ARC9011	Rectifier
REC-F16H	ARC9011	Rectifier
REC-F17	ARC9015	Rectifier
REC2631	ARC0046	Rectifier
RS-209	SBH1002	S. Brush holder
RS-211	SBH1001	S. Brush holder
SD-1137	SD1020	Drive
SD-1140	SD0029	Drive
SD-1141	SD0028	Drive
SD-1142	SD1016	Drive
SD-1143	SD1015	Drive
SD-2101	SD0014	Drive
SD-2104	SD0052	Drive
SD-2105	SD0045	Drive
SD-2106	SD0067	Drive
SD-2107	SD0076	Drive
SD-2108	SD0057	Drive
SD-2109	SD0058	Drive
SD-2110	SD0078	Drive
SD-2112	SD0071	Drive
SD-2114	SD0068	Drive
SD-2115	SD0024	Drive
SD-2116	SD0055	Drive
SD-2117	SD0045	Drive
SD-2118	SD0044	Drive
SD-2119	SD0063	Drive
SD-2120	SD0023	Drive
SD-2121	SD0077	Drive
SD-2122	SD0014	Drive
SD-2123	SD0071	Drive
SD-2124	SD0073	Drive
SD-2125	SD0014	Drive
SD-2126	SD0044	Drive
SD-2130	SD0057	Drive
SD-2132	SD0066	Drive
SD-2150	SD0033	Drive
SD-2171	SD0036	Drive
SD-2190	SD0083	Drive
SD-3037	SD5031	Drive
SD-3101	SD5006	Drive
SD-3102	SD5005	Drive
SD-3104	SD5008	Drive
SD-3107	SD5007	Drive
SD-3109	SD5021	Drive
SD-3110	SD5018	Drive
SD-3111	SD5021	Drive
SD-3112	SD5005	Drive
SD-3113	SD5019	Drive
SD-3116	SD5006	Drive
SD-3117	SD5039	Drive
SD-3119	SD5021	Drive
SD-3136	SD5029	Drive
SD-3166	SD1018	Drive
SD-3167	SD1018	Drive
SD-3243	SD5026	Drive
SD-4011	SD2008	Drive
SD-4012	SD2010	Drive
SD-4013	SD2009	Drive
SD-4014	SD2016	Drive
SD-4015	SD2004	Drive
SD-4020	SD2005	Drive
SD-4161	SD2021	Drive
SD-5020	SD6027	Drive
SD-5021	SD6026	Drive
SD-5030	SD6022	Drive
SD-5036	SD6027	Drive
SD-5050	SD6005	Drive
SD-5052	SD6019	Drive
SD-5053	SD6003	Drive
SD-5055	SD6012	Drive
SD-5056	SD6033	Drive
SD-5060	SD6024	Drive
SD-5071	SD6020	Drive
SD-5072	SD6006	Drive
SD-5074	SD6021	Drive
SD-5080	SD6029	Drive
SD-5105	SD6028	Drive
SD-6102	SD5005	Drive
SD-6103	SD5020	Drive
SD-6104	SD5025	Drive
SD-7101	SD9016	Drive
SD-7102	SD1019	Drive
SH-2003	SBH0013	S. Brush holder
SH-2018	SBH0020	S. Brush holder
SH-2019	SBH0012	S. Brush holder
SH-2021	SBH0012	S. Brush holder
SH-2039	SBH0007	S. Brush holder
SH-2200	SBH0009	S. Brush holder
SH-2201	SBH0008	S. Brush holder
SH-2311	SBH0017	S. Brush holder
SH-2351	SBH0021	S. Brush holder
SH-2601	SBH1004	S. Brush holder
SH-2801	SBH9001	S. Brush holder
SH-3001	SBH5001	S. Brush holder
SH-3301	SBH2002	S. Brush holder
SH-3501	SBH5003	S. Brush holder
SH-6010	SBH2001	S. Brush holder
SH-6020	SBH2004	S. Brush holder
SH-6035	SBH5006	S. Brush holder
SH-6052	SBH6002	S. Brush holder
SH-6103	SBH2001	S. Brush holder
SH-6138	SBH5006	S. Brush holder
SH-6150	SBH6002	S. Brush holder
SH-7012	SBH9005	S. Brush holder
SH-7030	SBH5004	S. Brush holder
SH-9001	SBH6001	S. Brush holder
SH-9103	SBH6001	S. Brush holder
SN2S-258	SS0030	Starter solenoid
SNLC-240C	SS0035	Starter solenoid
SNLS-102	SS1008	Starter solenoid
SNLS-106	SS9001	Starter solenoid
SNLS-106B	SS9001	Starter solenoid
SNLS-106W	SS9019	Starter solenoid
SNLS-107	SS9019	Starter solenoid
SNLS-108	SS9002	Starter solenoid
SNLS-108B	SS9002	Starter solenoid
SNLS-109	SS9002	Starter solenoid
SNLS-110	SS1009	Starter solenoid
SNLS-111	SS1010	Starter solenoid
SNLS-135	SS9021	Starter solenoid
SNLS-143	SS1001	Starter solenoid
SNLS-145	SS1006	Starter solenoid
SNLS-146	SS1014	Starter solenoid
SNLS-146C	SS1014	Starter solenoid
SNLS-146H	SS1004	Starter solenoid
SNLS-147	SS1004	Starter solenoid
SNLS-147C	SS1004	Starter solenoid
SNLS-147H	SS1004	Starter solenoid
SNLS-148	SS1002	Starter solenoid
SNLS-154	SS1017	Starter solenoid
SNLS-155	SS1016	Starter solenoid
SNLS-156	SS1011	Starter solenoid
SNLS-157	SS1012	Starter solenoid
SNLS-170	SS1007	Starter solenoid
SNLS-171	SS1008	Starter solenoid
SNLS-172	SS1009	Starter solenoid
SNLS-172A	SS1010	Starter solenoid
SNLS-172B	SS1010	Starter solenoid
SNLS-203	SS0034	Starter solenoid
SNLS-204	SS0005	Starter solenoid
SNLS-207B	SS0011	Starter solenoid
SNLS-208	SS0064	Starter solenoid
SNLS-210	SS0062	Starter solenoid
SNLS-214	SS0006	Starter solenoid
SNLS-214A	SS0034	Starter solenoid
SNLS-214B	SS0023	Starter solenoid
SNLS-221C	SS0049	Starter solenoid
SNLS-222	SS0039	Starter solenoid
SNLS-222A	SS0016	Starter solenoid
SNLS-222B	SS0039	Starter solenoid
SNLS-236	SS0010	Starter solenoid
SNLS-236A	SS0011	Starter solenoid
SNLS-236D	SS0010	Starter solenoid
SNLS-2371	SS0051	Starter solenoid
SNLS-237D	SS0010	Starter solenoid
SNLS-237F	SS0017	Starter solenoid
SNLS-237I	SS0011	Starter solenoid
SNLS-237M	SS0036	Starter solenoid
SNLS-237T	SS0010	Starter solenoid
SNLS-237Z	SS0067	Starter solenoid
SNLS-238	SS0005	Starter solenoid
SNLS-238A	SS0020	Starter solenoid
SNLS-238B	SS0040	Starter solenoid
SNLS-238E	SS0040	Starter solenoid
SNLS-238F	SS0020	Starter solenoid
SNLS-238I	SS0018	Starter solenoid
SNLS-238J	SS0020	Starter solenoid
SNLS-238L	SS0038	Starter solenoid
SNLS-238Z	SS0037	Starter solenoid
SNLS-239	SS0023	Starter solenoid
SNLS-239A	SS0023	Starter solenoid
SNLS-240	SS0006	Starter solenoid
SNLS-240C	SS0035	Starter solenoid

UNIPOINT	AS	PRODUCT
SNLS-241	SS0057	Starter solenoid
SNLS-244	SS0014	Starter solenoid
SNLS-250	SS0024	Starter solenoid
SNLS-253	SS0056	Starter solenoid
SNLS-258	SS0030	Starter solenoid
SNLS-258A	SS0027	Starter solenoid
SNLS-260	SS0017	Starter solenoid
SNLS-272	SS0001	Starter solenoid
SNLS-272B	SS0031	Starter solenoid
SNLS-273	SS0002	Starter solenoid
SNLS-273B	SS0002	Starter solenoid
SNLS-274	SS4004	Starter solenoid
SNLS-275	SS4003	Starter solenoid
SNLS-276	SS0007	Starter solenoid
SNLS-277	SS0003	Starter solenoid
SNLS-278	SS0003	Starter solenoid
SNLS-280	SS0015	Starter solenoid
SNLS-2809	SS0015	Starter solenoid
SNLS-280C	SS0059	Starter solenoid
SNLS-281	SS0004	Starter solenoid
SNLS-2819	SS0004	Starter solenoid
SNLS-286	SS0009	Starter solenoid
SNLS-287	SS0009	Starter solenoid
SNLS-288	SS0053	Starter solenoid
SNLS-296	SS0029	Starter solenoid
SNLS-2962	SS0004	Starter solenoid
SNLS-297	SS0008	Starter solenoid
SNLS-303	SS4010	Starter solenoid
SNLS-304	SS4011	Starter solenoid
SNLS-305	SS2012	Starter solenoid
SNLS-327	SS4023	Starter solenoid
SNLS-334	SS4006	Starter solenoid
SNLS-342	SS4005	Starter solenoid
SNLS-347	SS4013	Starter solenoid
SNLS-351	SS4017	Starter solenoid
SNLS-354	SS4012	Starter solenoid
SNLS-355	SS4009	Starter solenoid
SNLS-501	SS9007	Starter solenoid
SNLS-537	SS3002	Starter solenoid
SNLS-538	SS3007	Starter solenoid
SNLS-540	SS3009	Starter solenoid
SNLS-550	SS3001	Starter solenoid
SNLS-551	SS3002	Starter solenoid
SNLS-552	SS3008	Starter solenoid
SNLS-553	SS3008	Starter solenoid
SNLS-554	SS3005	Starter solenoid
SNLS-558	SS3003	Starter solenoid
SNLS-559	SS3004B	Starter solenoid
SNLS-560	SS3004	Starter solenoid
SNLS-600A	SS9003	Starter solenoid
SNLS-600B	SS9005	Starter solenoid
SNLS-601A	SS9004	Starter solenoid
SNLS-601B	SS9006	Starter solenoid
SNLS-603	SS9008	Starter solenoid
SNLS-6033	SS9013	Starter solenoid
SNLS-606	SS9001	Starter solenoid
SNLS-607	AS4001	Stator
SNLS-6074	SS5025	Starter solenoid
SNLS-608B	SS5011	Starter solenoid
SNLS-608C	SS5003	Starter solenoid
SNLS-609G	SS5005	Starter solenoid
SNLS-609N	SS5027	Starter solenoid
SNLS-609Q	SS5020	Starter solenoid
SNLS-610	SS5002	Starter solenoid
SNLS-6101	SS5026	Starter solenoid
SNLS-610B	SS5003	Starter solenoid
SNLS-610C	SS5005	Starter solenoid
SNLS-612	SS2002	Starter solenoid
SNLS-614	SS2009	Starter solenoid
SNLS-614B	SS2009	Starter solenoid
SNLS-615	SS2003	Starter solenoid
SNLS-617	SS2005	Starter solenoid
SNLS-621	SS2006	Starter solenoid
SNLS-6216	SS2018	Starter solenoid
SNLS-6241	SS2021	Starter solenoid
SNLS-627	SS2008	Starter solenoid
SNLS-630	SS6002	Starter solenoid
SNLS-631	SS6001	Starter solenoid
SNLS-633	SS6003	Starter solenoid
SNLS-6384	SS6005	Starter solenoid
SNLS-646	SS9012	Starter solenoid
SNLS-646A	SS9012	Starter solenoid
SNLS-648A	SS1023	Starter solenoid
SNLS-660	SS5001	Starter solenoid
SNLS-662	SS5008	Starter solenoid
SNLS-672	SS5010	Starter solenoid
SNLS-675	SS5015	Starter solenoid
SNLS-675A	SS5029	Starter solenoid
SNLS-677	SS5009	Starter solenoid
SNLS-678	SS5016	Starter solenoid
SNLS-690	SS2001	Starter solenoid
SNLS-750	SS5006	Starter solenoid
SNLS-751	SS5007	Starter solenoid
SNLS-751A	SS5007	Starter solenoid
SNLS-752	SS5007	Starter solenoid
SNLS-753	SS5013	Starter solenoid
SNLS-7531	SS5019	Starter solenoid
SNLS-7532	SS5013	Starter solenoid
SNLS-755	SS5013	Starter solenoid
SNLS-D38	SS1015	Starter solenoid
SNLS-D42	SS1005	Starter solenoid
SNLS-D42A	SS1013	Starter solenoid
SNLS-D43	SS1003	Starter solenoid
SNLS-R121	SS1018	Starter solenoid
SNLS-R241	SS1019	Starter solenoid
SNLS-R242	SS0033	Starter solenoid
SNLS-R246	SS0022	Starter solenoid
SNLS-R247	SS5021	Starter solenoid
STR-3015	S5010	Starter
STR-3024	S2018	Starter
STR-3800	S2019	Starter
STR-4201	S1016	Starter
STR-4701	S3056	Starter
STR-6183	S6023	Starter
T-140007	AR1001	Rotor
T-140009	AS1001	Stator
T-140707	AR1002	Rotor
T-203009	AS0007	Stator
T-203109	AS0008	Stator
T-207007	AR0006	Rotor
T-305109	AS5001	Stator
T-305309	AS5004	Stator
T-305709	AS5004	Stator
T-306509	AS5004	Stator
T-503509	AS6002	Stator
T-503609	AS6001	Stator
T-504209	AS6001	Stator
T-V00209	AS2006	Stator
T-V00409	AS5003	Stator
T-V00509	AS2003	Stator
YR-381	ARE4009	Regulator
YR-385	ARE4003	Regulator
YR-387	ARE4007	Regulator
YR-388	ARE4004	Regulator
YR-3885	ARE4011	Regulator
YR-389	ARE4008	Regulator
YR-558	ARE5001	Regulator
YR-559	ARE5014	Regulator
YR-561	ARE5003	Regulator
YR-565	ARE5032	Regulator
YR-566	ARE5002	Regulator
YR-567	ARE5011	Regulator
YR-568	ARE5027	Regulator
YR-569	ARE5008	Regulator
YR-570	ARE5004	Regulator
YR-571	ARE5005	Regulator
YR-572	ARE5028	Regulator
YR-579	ARE5020	Regulator
YR-580	ARE5020	Regulator
YR-581	ARE5018	Regulator
YR-582	ARE5018	Regulator
YR-5821	ARE5013	Regulator
YR-587	ARE5026	Regulator
YR-588	ARE5006	Regulator
YR-589	ARE5030	Regulator
YR-590	ARE5029	Regulator
YR-591	ARE5035	Regulator
YR-5913	ARE5042	Regulator
YR-591A	ARE5019	Regulator
YR-594A	ARE5021	Regulator
YR-596	ARE5010	Regulator
YR-5972	ARE5031	Regulator
YR-5973	ARE5007	Regulator
YR-5974	ARE5047	Regulator
YR-5979	ARE0053	Regulator
YR-599	ARE5009	Regulator
YR-610	ARE6015	Regulator
YR-6101	ARE6015	Regulator
YR-6102	ARE6015	Regulator
YR-611	ARE6028	Regulator
YR-613	ARE6027	Regulator
YR-623	ARE6003	Regulator
YR-631	ARE6001	Regulator
YR-6319	ARE6021	Regulator
YR-633	ARE6004	Regulator
YR-634	ARE6018	Regulator
YR-635	ARE6022	Regulator
YR-636	ARE6005	Regulator
YR-637	ARE6006	Regulator
YR-639	ARE6011	Regulator
YR-641	ARE6012	Regulator
YR-642	ARE6020	Regulator
YR-643H	ARE6012	Regulator
YR-644	ARE6004	Regulator
YR-645	ARE6023	Regulator
YR-646	ARE6006	Regulator

UNIPOINT	AS	PRODUCT
YR-650	ARE6008	Regulator
YR-651	ARE6009	Regulator
YR-652	ARE6020	Regulator
YR-653	ARE6019	Regulator
YR-654	ARE6010	Regulator
YR-656	ARE6013	Regulator
YR-6561	ARE6033	Regulator
YR-656H	ARE6013	Regulator
YR-657	ARE6002	Regulator
YR-658	ARE6025	Regulator
YR-661	ARE6014	Regulator
YR-662	ARE6031	Regulator
YR-663	ARE6007	Regulator
YR-666	ARE6017	Regulator
YR-6661	ARE6017	Regulator
YR-680	ARE2001	Regulator
YR-6809	ARE2035	Regulator
YR-683	ARE2007	Regulator
YR-684	ARE2027	Regulator
YR-685	ARE2028	Regulator
YR-686	ARE2029	Regulator
YR-687	ARE2020	Regulator
YR-689	ARE2022	Regulator
YR-690	ARE2015	Regulator
YR-691	ARE2014	Regulator
YR-693	ARE2013	Regulator
YR-694	ARE2021	Regulator
YR-698	ARE2023	Regulator
YR-699	ARE2015	Regulator
YR-708B	ARE2005	Regulator
YR-711	ARE2024	Regulator
YR-712	ARE2031	Regulator
YR-713	ARE2009	Regulator
YR-714	ARE2017	Regulator
YR-715	ARE2011	Regulator
YR-716	ARE2008	Regulator
YR-718	ARE2016	Regulator
YR-719	ARE2026	Regulator
YR-720	ARE2019	Regulator
YR-721	ARE2018	Regulator
YR-814	ARE1001	Regulator
YR-814C	ARE1001	Regulator
YR-814E	ARE1001	Regulator
YR-818	ARE4001	Regulator
YR-833	ARE1002	Regulator
YR-834	ARE1022	Regulator
YR-851	ARE1003	Regulator
YR-8512	ARE1003	Regulator
YR-851A	ARE1014	Regulator
YR-851B	ARE1016	Regulator
YR-852	ARE1008	Regulator
YR-853	ARE1017	Regulator
YR-854	ARE1005	Regulator
YR-8562	ARE1012	Regulator
YR-858	ARE1004	Regulator
YR-859	ARE1019	Regulator
YR-859A	ARE1019	Regulator
YR-859H	ARE1019	Regulator
YR-862	ARE1027	Regulator
YR-950	ARE3004	Regulator
YR-951	ARE3003	Regulator
YR-952	ARE3011	Regulator
YR-960	ARE3009	Regulator
YR-961	ARE3005	Regulator
YR-962	ARE3027	Regulator
YR-963	ARE3002	Regulator
YR-B678	ARE2006	Regulator
YR-F30	ARE9003	Regulator
YR-F30B	ARE9003	Regulator
YR-F31	ARE9004	Regulator
YR-F32	ARE9012	Regulator
YR-F33	ARE9005	Regulator
YR-F33H	ARE9011	Regulator
YR-F34	ARE9017	Regulator
YR-F341	ARE9015	Regulator
YR-F342	ARE9033	Regulator
YR-F343	ARE9033	Regulator
YR-F36	ARE9013	Regulator
YR-F38	ARE9010	Regulator
YR-F39	ARE9014	Regulator
YR-IN677B	ARE2002	Regulator
YR-IN678	ARE2003	Regulator
YR-IN678B	ARE2004	Regulator
YR-K01	ARE9007	Regulator
YR-K03	ARE9008	Regulator
YR-L01	ARE9001	Regulator
YR-T615E	ARE6016	Regulator
YR-TA813C	ARE0027	Regulator
YR-TA815	ARE3017	Regulator
YR-V01	ARE0007	Regulator
YR-V02	ARE0006	Regulator
YR-V05	ARE0021	Regulator
YR-V06	ARE0026	Regulator
YR-V07	ARE0022	Regulator
YR-V08	ARE0024	Regulator
YR-V09	ARE0025	Regulator
YR-V10	ARE0033	Regulator
YR-V13	ARE0015	Regulator
YR-V14	ARE0002	Regulator
YR-V16	ARE0003	Regulator
YR-V19	ARE0032	Regulator
YR-V25	ARE0017	Regulator
YR-V29	ARE0012	Regulator
YR-V321	ARE0042	Regulator
YR-V323	ARE0054	Regulator
YR-V33	ARE0057	Regulator
UNITED TECHNOLOGIES	**AS**	**PRODUCT**
014560CP30SM	SA2003	Starter armature
SMO1965	S9025	Starter
UNIVERSAL	**AS**	**PRODUCT**
00510016	ARD9001	Diode
URSUS	**AS**	**PRODUCT**
7017954M1	S9048	Starter
80350911	S9049	Starter
URSUS	**AS**	**PRODUCT**
7006119M1	S9037	Starter
7017954M1	S9021	Starter
VALEO	**AS**	**PRODUCT**
013610	SD3001	Drive
051914	SBU9014	Bushing
059390	SD3003	Drive
059427	SD3020	Drive
072630	PSX83-84	Sta. Brush set
074515	SD6009	Drive
075269	PSX115-116	Sta. Brush set
075943	PSX115-116	Sta. Brush set
077973	ABEC0006	Bearing cover
092268	ABE9003	Bearing
092655	PSX115-116	Sta. Brush set
092860	ARE3004	Regulator
092897	ARE3003	Regulator
092901	ARE3048	Regulator
092902	ARE3003	Regulator
092914	PSX133	Sta. Brush set
092927	ARE3004	Regulator
092937	ARE3011	Regulator
092940	ARE3003	Regulator
092950	PX60	Alt. Brush set
092962	ARE3048	Regulator
092962Y	ARE3048	Regulator
092981	ARE3003	Regulator
092982	ARE3011	Regulator
092990	ARE3011	Regulator
092990F	ARE3011	Regulator
096879	AP3001	Pulley
097482	ABE9006	Bearing
099738	SD3002	Drive
099931	SD3001	Drive
100156	AS3003	Stator
100157	ARC3002	Rectifier
100273	AS3006	Stator
100931	ARC3003	Rectifier
101025	AS3006	Stator
101217	ARC3003	Rectifier
101227	ARC3026	Rectifier
101342	ARC3019	Rectifier
101518	AS3003	Stator
101519	AS3003	Stator
101581	SA3002	Starter armature
101701	ARC3026	Rectifier
101713	ARC3008	Rectifier
101743	ARC3001	Rectifier
101759	ARC3003	Rectifier
101773	ARC3025	Rectifier
101776	ARC3025	Rectifier
101868	AS3006	Stator
102130	ABE9029	Bearing
102217	SS3001	Starter solenoid
102339	ARC3025	Rectifier
102380	SA3002	Starter armature
102527	ARC3001	Rectifier
102556	ARC3007	Rectifier
102589	AS3003	Stator
102778	AS3004	Stator
102849	SS3002	Starter solenoid
102885	AS3004	Stator
103066	SD0028	Drive
103489	SS3002	Starter solenoid
103539	ARC3003	Rectifier
103543	ARC3001	Rectifier
103546	ARC3025	Rectifier
103551	ARC3007	Rectifier
103576	ARC3003	Rectifier
103611	SD3008	Drive

VALEO	AS	PRODUCT
103794	SS3002	Starter solenoid
103813	ARC3010	Rectifier
104269	ARC3026	Rectifier
104292	ARC3003	Rectifier
104594	SS3007	Starter solenoid
104615	ARC3017	Rectifier
10475021	AP3002	Pulley
104941	ARC3003	Rectifier
104971	ARC3002	Rectifier
105135	ARC3006	Rectifier
105252	ARC3004	Rectifier
105254	SS3009	Starter solenoid
105299	ABEC3003	Bearing cover
105380	ARC3001	Rectifier
105489	SS3002	Starter solenoid
105522	ARC3017	Rectifier
105523	ARC3017	Rectifier
105538	SD3004	Drive
105540	SD3005	Drive
105554	ARC3027	Rectifier
105629	ARC3006	Rectifier
105690	ARC3004	Rectifier
105754	ARC3027	Rectifier
105813	ARC3010	Rectifier
105814	ARC3010	Rectifier
105901	ARC3006	Rectifier
106016	ARC3017	Rectifier
106027	AS3002	Stator
106142	SS3008	Starter solenoid
106143	SS3008	Starter solenoid
1250128	S3062	Starter
1250299	S3053	Starter
128005	ARE3011	Regulator
180510	ARC3006	Rectifier
180537	ARC3005	Rectifier
180593	ARC3001	Rectifier
180620	A3060	Alternator
180755	SD3021	Drive
180826	SD3006	Drive
180827	SD3010	Drive
181068	SD3007	Drive
181069	SS3006	Starter solenoid
181155	ARC3007	Rectifier
181277	SD3006	Drive
181404	SS3005	Starter solenoid
181961	SBH3001	S. Brush holder
182005	ARE3011	Regulator
182011	ARE3011	Regulator
182046	ARE3004	Regulator
182047	SD3004	Drive
182049	SA3003	Starter armature
182051	PSX140-141	Sta. Brush set
182052	SD3005	Drive
182064	PSX115-116	Sta. Brush set
182065	PSX129	Sta. Brush set
182066	PSX133	Sta. Brush set
182067	PSX133	Sta. Brush set
182070	PSX119-120	Sta. Brush set
182073	PSX122-123-124	Sta. Brush set
182120	ARE3003	Regulator
182132	PSX83-84	Sta. Brush set
182153	PSX83-84	Sta. Brush set
182169	ARE3013	Regulator
182174	AR3008	Rotor
182175	SA3003	Starter armature
182176	SD3010	Drive
182177	SD3006	Drive
182178	SD3007	Drive
182412	SD3009	Drive
182460	SS3008	Starter solenoid
182461	SS3002	Starter solenoid
182462	SS3009	Starter solenoid
182563	SS3004B	Starter solenoid
182591	SA3007	Starter armature
182594	SF3002	Starter field coil
182604	S3027	Starter
182717	SS3004	Starter solenoid
182848	SD3019	Drive
183742	SBU9024	Bushing
183957	SBH3002	S. Brush holder
184202	S3042	Starter
184448	SD3009	Drive
184530	SD3010	Drive
184630	SBH3006	S. Brush holder
184643	S3027	Starter
184917	SD3001	Drive
185182	SD3004	Drive
185290	SD3012	Drive
185441	SD3011	Drive
185625	S3027	Starter
185675	SD3010	Drive
185745	SD3021	Drive
185915	SD3013	Drive
185994	S3027	Starter
186020	SD3011	Drive
186381	SBH3002	S. Brush holder
186456	SD3010	Drive
186621	SD0028	Drive
186798	SD3015	Drive
186867	SD3014	Drive
186938	SD3014	Drive
187084	SD3035	Drive
187328	SD3017	Drive
187336	SD3018	Drive
187428	SD3016	Drive
187449	SD3025	Drive
187528	SD3020	Drive
187567	SD3022	Drive
187788	SD3019	Drive
187863	SD3018	Drive
187960	SD3014	Drive
187996	SD3018	Drive
188068	ABE9043	Bearing
188251	SD3018	Drive
188254	S3026	Starter
188256	SD3012	Drive
188595	SD3029	Drive
188839	S3039	Starter
188887	SD3014	Drive
188993	SD3027	Drive
190637	SD3041	Drive
190895	S3029	Starter
191205	S3023	Starter
191335	S0090	Starter
191601	SD3028	Drive
191655	S3026	Starter
2104264	A0097	Alternator
2106053	SBH3006	S. Brush holder
2181699	A3046	Alternator
2181727	A3009	Alternator
2181761	A3100R	Alternator
2181762	A3100R	Alternator
2181991	A3060	Alternator
231873	AR3003	Rotor
245092	IC9004	Ignition Coil
245104	IC9001	Ignition Coil
245527	IM4001	Ignition Module
2518025	ARE3050	Regulator
2518028	A4063	Alternator
2518039	A3042	Alternator
2518044	A0031	Alternator
2518070	A4010	Alternator
2518369	ARE3050	Regulator
2518396	ARE3050	Regulator
2518407	ARC3010	Rectifier
2518427	ARE3050	Regulator
2519124	ARE3001	Regulator
2519490	ARE3001	Regulator
2519690	ARE3009	Regulator
2519836	APC3001	Plastic cover
2521335	ARE3002	Regulator
2521487	ARC3021	Rectifier
2521760	ARE3021	Regulator
2521766	ARE3021	Regulator
2522098	ARE3001	Regulator
2522104	A3061	Alternator
2522339	ARE3021	Regulator
2522939	ARE3001	Regulator
2523190	ARE3021	Regulator
2523198	ARE3001	Regulator
2523972	ARC3021	Rectifier
2536778	AFP0010	FW pulley
2541114	A0070	Alternator
2541117	A3006	Alternator
2541118	A3050	Alternator
2541120	A3009	Alternator
2541121	A3011	Alternator
2541124	A3003	Alternator
2541127	A3014	Alternator
2541141	ARE3053	Regulator
2541156	A3002	Alternator
2541168	A3060	Alternator
2541170	A3005	Alternator
2541171	A3012	Alternator
2541173	A3004	Alternator
2541182	A3012	Alternator
2541191	A3042	Alternator
2541192	ARE3014	Regulator
2541193	ARE3014	Regulator
2541197	A3044	Alternator
2541199	A3061	Alternator
2541199B	A3061	Alternator
2541199D	A3061	Alternator
2541202	A3026	Alternator
2541204	A3001	Alternator
2541225	A3046	Alternator

VALEO	AS	PRODUCT
2541226	A3043	Alternator
2541235	A4059	Alternator
2541236	A4059	Alternator
2541245	A3011	Alternator
2541251	A3051	Alternator
2541251B	A3051	Alternator
2541257	A3006	Alternator
2541264	A0069	Alternator
2541297	A0031	Alternator
2541298	A3020	Alternator
2541298A	A3020	Alternator
2541301	A0070	Alternator
2541307	A3044	Alternator
2541307C	A3044	Alternator
2541307D	A3044	Alternator
2541313	A3008	Alternator
2541321	A3075	Alternator
2541324	A3001	Alternator
2541327	A3014	Alternator
2541328	A3008	Alternator
2541331	A3009	Alternator
2541344	A3038	Alternator
2541348	A3064	Alternator
2541354	A3026	Alternator
2541360	A3021	Alternator
2541364	A3005	Alternator
2541368	A3012	Alternator
2541392	ARE3002	Regulator
2541399	A4063	Alternator
2541403	A3100R	Alternator
2541404	ARE3002	Regulator
2541406	ARE3005	Regulator
2541407	ARE3009	Regulator
2541410	A0202	Alternator
2541416	A0006	Alternator
2541416F	A0006	Alternator
2541417	A0077	Alternator
2541417K	A0077	Alternator
2541424	A3011	Alternator
2541433	ARE3002	Regulator
2541434	A0028	Alternator
2541434A	A0028	Alternator
2541445	A3004	Alternator
2541457	A3016	Alternator
2541457B	A3016	Alternator
2541459	A3015	Alternator
2541460	A3010	Alternator
2541464	A3045	Alternator
2541466	A3048	Alternator
2541473	A3064	Alternator
2541475	A3039	Alternator
2541476	A0016	Alternator
2541484	ARE3001	Regulator
2541490	A3004	Alternator
2541491	A3004	Alternator
2541493	ARE3002	Regulator
2541494	A3062	Alternator
2541496	ARE3005	Regulator
2541524	A3011	Alternator
2541618	A0023	Alternator
2541619	A4018	Alternator
2541624	A3059	Alternator
2541626	A0078	Alternator
2541626E	A0078	Alternator
2541635	A0023	Alternator
2541641	A3031	Alternator
2541641D	A3031	Alternator
2541648	A0023	Alternator
2541658	A3064	Alternator
2541663	A3042	Alternator
2541665	A3057	Alternator
2541665B	A3057	Alternator
2541665C	A3057	Alternator
2541666	ARE3002	Regulator
2541667	ARE3002	Regulator
2541668	ARE3007	Regulator
2541669B	ARE3007	Regulator
2541675	A0131	Alternator
2541676	A0131	Alternator
2541678	A3019	Alternator
2541678B	A3019	Alternator
2541678C	A3019	Alternator
2541679	A3041	Alternator
2541679C	A3041	Alternator
2541682	ARE3002	Regulator
2541684	A3040	Alternator
2541694	A3076	Alternator
2541694D	A3076	Alternator
2541695	A4008	Alternator
2541697	A0161	Alternator
2541710	A3015	Alternator
2541710B	A3015	Alternator
2541715	ARE3006	Regulator
2541715B	ARE3006	Regulator
2541719	A3020	Alternator
2541720	A3040	Alternator
2541721	ARE3002	Regulator
2541725	A3029	Alternator
2541725B	A3029	Alternator
2541725H	A3029	Alternator
2541728	A4003	Alternator
2541732	A3015	Alternator
2541733	A3016	Alternator
2541735	A3015	Alternator
2541738	A3021	Alternator
2541738B	A3021	Alternator
2541741	A3039	Alternator
2541741B	A3039	Alternator
2541758	A3022	Alternator
2541758B	A3022	Alternator
2541759	A0163	Alternator
2541760	A3096	Alternator
2541763	A3020	Alternator
2541763A	A3020	Alternator
2541763C	A3020	Alternator
2541763D	A3020	Alternator
2541764	A3040	Alternator
2541764A	A3040	Alternator
2541765	A3016	Alternator
2541765A	A3016	Alternator
2541769C	A3041	Alternator
2541770	A3066	Alternator
2541775	A0114	Alternator
2541775A	A0114	Alternator
2541775B	A0114	Alternator
2541776	A0005	Alternator
2541776B	A0005	Alternator
2541778	A3100R	Alternator
2541786	A3095	Alternator
2541800	ARE3002	Regulator
2541801	A0079	Alternator
2541802	A0131	Alternator
2541811	A0157	Alternator
2541811A	A0157	Alternator
2541812	A0129	Alternator
2541815	A0077	Alternator
2541815A	A0077	Alternator
2541815B	A0077	Alternator
2541817	A0078	Alternator
2541819	A0131	Alternator
2541821	A0202	Alternator
2541821A	A0202	Alternator
2541828	A3061	Alternator
2541828B	A3061	Alternator
254183	ARE3019	Regulator
2541838	A0114	Alternator
2541838A	A0114	Alternator
2541839	A0005	Alternator
2541839A	A0005	Alternator
2541844	A0041	Alternator
2541848	A3065	Alternator
2541850	A3061	Alternator
2541854	A3015	Alternator
2541856	A3081	Alternator
2541859	A3004	Alternator
2541862	A3024	Alternator
2541862B	A3024	Alternator
2541873	A3018	Alternator
2541884	A3065	Alternator
2541894	A3064	Alternator
2541895	A3081	Alternator
2541899	A3089	Alternator
2541904A	A3031	Alternator
2541911	A0005	Alternator
2541912	A0157	Alternator
2541914	A3090	Alternator
2541916	A3018	Alternator
2541919	A0114	Alternator
2541920	A0005	Alternator
2541920B	A0005	Alternator
2541922	A3058	Alternator
2541927	A3111	Alternator
2541927A	A3111	Alternator
2541939B	ARE3032	Regulator
2541944B	A0041	Alternator
2541951	A3057	Alternator
2541952	ARE3016	Regulator
2541952B	ARE3016	Regulator
2541953	A3028	Alternator
2541953B	A3028	Alternator
2541954	A3079	Alternator
2541959	A0114	Alternator
2541960	A0005	Alternator
2541961	A0162	Alternator
2541963	A0071	Alternator
2541963A	A0071	Alternator

VALEO	AS	PRODUCT
2541965	A4052	Alternator
2541968	A3082	Alternator
2541970	A3017	Alternator
2541970A	A3017	Alternator
2541971	A3023	Alternator
2541971B	A3023	Alternator
2541976	A3092	Alternator
2541981	A3089	Alternator
2541982	A3089	Alternator
2541983	A3088	Alternator
2541988	A3090	Alternator
2541989	A3091	Alternator
2541992	A0005	Alternator
2541995	A0133	Alternator
2541996C	ARE3008	Regulator
2541998	A0042	Alternator
2542198	A3031	Alternator
2542201	A3036	Alternator
2542207B	ARE3023	Regulator
2542208B	ARE3023	Regulator
2542209	ARE3045(VALEO)	Regulator
2542209B	ARE3045(VALEO)	Regulator
2542224	A3090	Alternator
2542225	A0050	Alternator
2542225A	A0050	Alternator
2542227	A0050	Alternator
2542228	A3027	Alternator
2542228A	A3027	Alternator
2542228B	A3027	Alternator
2542232	A0143	Alternator
2542233	A3108	Alternator
2542233C	A0045	Alternator
2542234	A0046	Alternator
2542234A	A0046	Alternator
2542237	A0059	Alternator
2542237A	A0059	Alternator
2542237D	A0059	Alternator
2542241	A0027	Alternator
2542245	A0127	Alternator
2542245C	A0127	Alternator
2542248C	ARE3016	Regulator
2542251	A3072	Alternator
2542253	A0163	Alternator
2542254	A3022	Alternator
2542254A	A3022	Alternator
2542255	A0081	Alternator
2542257	A0125	Alternator
2542259	A0056	Alternator
2542260	A0037	Alternator
2542264	A3094	Alternator
2542272	A3037	Alternator
2542272A	A3037	Alternator
2542272B	A3037	Alternator
2542272C	A3037	Alternator
2542272E	A3037	Alternator
2542273	A1001	Alternator
2542280	A0188	Alternator
2542282	A0042	Alternator
2542285	A3032	Alternator
2542285A	A3032	Alternator
2542291	A3058	Alternator
2542291A	A3058	Alternator
2542292C	ARE3010	Regulator
2542294	A3083	Alternator
2542295	A3054	Alternator
2542296	A3013	Alternator
2542299C	ARE3028	Regulator
2542300A	A3110	Alternator
2542305	A4076	Alternator
2542307	A3069	Alternator
2542310	A3030	Alternator
2542312	A3093	Alternator
2542315	A3092	Alternator
2542317	A0144	Alternator
2542319	A0067	Alternator
2542320	A0206	Alternator
2542320A	A0206	Alternator
2542320B	A0206	Alternator
2542323	A0050	Alternator
2542323A	A0050	Alternator
2542324	A3108	Alternator
2542332	ARE3010	Regulator
2542343	A3087	Alternator
2542347	A3082	Alternator
2542351	A3051	Alternator
2542352	A3022	Alternator
2542354	A3079	Alternator
2542355	A0081	Alternator
2542355A	A0081	Alternator
2542357	A0163	Alternator
2542358	A3022	Alternator
2542358A	A3022	Alternator
2542359	A3059	Alternator
2542362B	ARE3016	Regulator
2542364	A3090	Alternator
2542365	A3089	Alternator
2542376	A3022	Alternator
2542376A	A3022	Alternator
2542377	A0071	Alternator
2542378B	ARE3038	Regulator
2542379	A0157	Alternator
2542394	A3032	Alternator
2542394B	A3032	Alternator
2542398	A4076	Alternator
2542400	A3069	Alternator
2542402	A0160	Alternator
2542412	A3058	Alternator
2542413	A3082	Alternator
2542414	A3082	Alternator
2542415	A3018	Alternator
2542416	A3018	Alternator
2542418	A3057	Alternator
2542420	A0044	Alternator
2542422	A3106	Alternator
2542427	A5024	Alternator
2542428	A3032	Alternator
2542429	A3056	Alternator
2542433	A3018	Alternator
2542441	A3053	Alternator
2542449	ARE3020	Regulator
2542461	A0059	Alternator
2542461A	A0059	Alternator
2542461D	A0059	Alternator
2542466	A3073	Alternator
2542470	A3035	Alternator
2542470D	A3037	Alternator
2542470G	A3037	Alternator
2542471	A3030	Alternator
2542472	A3074	Alternator
2542479	A3018	Alternator
2542484	A3032	Alternator
2542485	A5024	Alternator
2542486	A3017	Alternator
2542488	A3032	Alternator
2542489	A3023	Alternator
2542489A	A3023	Alternator
2542491	A3056	Alternator
2542495	A3077	Alternator
2542496	A3033	Alternator
2542500	A3051	Alternator
2542500A	A3051	Alternator
2542508	A0046	Alternator
2542508E	A0046	Alternator
2542509	A0195	Alternator
2542514	A3059	Alternator
2542515	A0162	Alternator
2542523	A3035	Alternator
2542523C	A3035	Alternator
2542523F	A3035	Alternator
2542524	A3085R	Alternator
2542526	A5023	Alternator
2542531	A3027	Alternator
2542538	A3087	Alternator
2542546	A3108	Alternator
2542548	A0044	Alternator
2542551	A3073	Alternator
2542554	A3034	Alternator
2542556	A3027	Alternator
2542556A	A3027	Alternator
2542557	A3074	Alternator
2542564	A3051	Alternator
2542564A	A3051	Alternator
2542565	A3105	Alternator
2542572	A0067	Alternator
2542573	A3063	Alternator
2542577	A3102	Alternator
2542578	A3101	Alternator
2542584	A0048	Alternator
2542602	A3087	Alternator
2542603	A3092	Alternator
2542605	A3087	Alternator
2542608	A0216	Alternator
2542609	A0217	Alternator
2542611	A3098R	Alternator
2542611A	A3098R	Alternator
2542611B	A3098R	Alternator
2542613C	A3098R	Alternator
2542615	A0142	Alternator
2542619	A0142	Alternator
2542637	A3084R	Alternator
2542650	A0037	Alternator
2542653	A3037	Alternator
2542653A	A3037	Alternator
2542653D	A3037	Alternator
2542662	A3094	Alternator

VALEO	AS	PRODUCT
2542663	A3068	Alternator
2542664	A3027	Alternator
2542670	A3055	Alternator
2542671	A3104	Alternator
2542671A	A3104	Alternator
2542672	A3070	Alternator
2542680	A3109	Alternator
2542681	A3027	Alternator
2542684	A3051	Alternator
2542684A	A3051	Alternator
2542685	A0221	Alternator
2542686	A3094	Alternator
2542687	A0076	Alternator
2542691	A3079	Alternator
2542691C	A3079	Alternator
2542693	A0142	Alternator
2542695	A0190	Alternator
2542704	A3074	Alternator
2542705	A3067	Alternator
2542717	A3112	Alternator
2542725	A0142	Alternator
2542725A	A3029	Alternator
2542726	A0142	Alternator
2542730	A3097	Alternator
2542731	A0181	Alternator
2542736	A9023	Alternator
2542736A	A9023	Alternator
2542738	A0195	Alternator
2542742	A5023	Alternator
2542746	A3101	Alternator
2542747	A3102	Alternator
2542747A	A3102	Alternator
2542749	A0220	Alternator
2542749A	A0220	Alternator
2542749B	A0220	Alternator
2542751	A3084R	Alternator
2542767	A0027	Alternator
2542771	A3085R	Alternator
2542794	A3032	Alternator
2542803	A3032	Alternator
2542812	A3094	Alternator
2542813	A3018	Alternator
2542814	A3018	Alternator
2542817	A3034	Alternator
2542818	A3068	Alternator
2542819	A3084R	Alternator
2542824	A3094	Alternator
2542826	A3094	Alternator
2542832	A0142	Alternator
2542839	A3067	Alternator
2542840	A0188	Alternator
2542841	A3078	Alternator
2542849	A3093	Alternator
2542850	A3078	Alternator
2542851	A3055	Alternator
2542852	A3070	Alternator
2542861	A4074	Alternator
2542884	A4074	Alternator
2542891	A3080	Alternator
2542897	A3028	Alternator
2542898	A0190	Alternator
2542920	A3032	Alternator
2542921	A5024	Alternator
2542923	A3032	Alternator
2542923A	A3032	Alternator
2542924	A0142	Alternator
2542924A	A0142	Alternator
2542925	A3074	Alternator
2542925A	A3074	Alternator
2542945	A3052	Alternator
2542948	A0127	Alternator
2542949	A0059	Alternator
2543206	A3103	Alternator
2543236	A3070	Alternator
2543264	A3080	Alternator
2543292	A0221	Alternator
2543294	A3032	Alternator
2543304	A3098R	Alternator
2543304A	A3098R	Alternator
2543305C	A3098R	Alternator
2543313	A0076	Alternator
2543314	A3112	Alternator
2543320	A0027	Alternator
2543325B	ARE3038	Regulator
2543337	A3034	Alternator
2543339	A3037	Alternator
2543340	A3035	Alternator
2543342	A3068	Alternator
2543343	A3084R	Alternator
2543384	A3037	Alternator
2543385	A3034	Alternator
2543387	A3035	Alternator
2543441	A3035	Alternator
2543477	A4074	Alternator
2543492	A3027	Alternator
2543493	A3051	Alternator
2543520	A5024	Alternator
2543521	A3032	Alternator
2543526	A0142	Alternator
2543526A	A0142	Alternator
2543527	A3074	Alternator
2543552	A3068	Alternator
2543552A	A3068	Alternator
2543553	A3106	Alternator
2543558	A3037	Alternator
2543560	A3052	Alternator
2543562	A3052	Alternator
2543564	A3103	Alternator
2543596	A3084R	Alternator
2543596A	A3084R	Alternator
2543596B	A3084R	Alternator
2543639	A3037	Alternator
2545472	ARE3002	Regulator
2545938	ARC3013	Rectifier
2545941	ARC3012	Rectifier
2546048	ARC3035	Rectifier
2546062	ARC3011	Rectifier
2546076	ARC3011	Rectifier
2546778	AFP0010	FW pulley
2546952	AFP3004	FW pulley
2546971	AFP9002	Cover for pulley
2546999	AFP3001	FW pulley
2547128	AFP0003	FW pulley
2547439	AFP0009	FW pulley
2547655	AFP3002	FW pulley
2547737	AFP3003	FW pulley
2547814C	ARE3010	Regulator
2547917	AFP3005	FW pulley
2548083	ARC3028	Rectifier
2548207	AFP3006	FW pulley
2548543	AFP3013	FW pulley
2548543A	AFP0029	FW pulley
2548621	AFP3011	FW pulley
2548703A	AFP3014	FW pulley
2549800	AFP0021	FW pulley
2549858	AFP0023	FW pulley
2574347	A0143	Alternator
2590538	ARE3003	Regulator
2590542	ARE3003	Regulator
2590558	ARE3004	Regulator
2590625	AR3001	Rotor
2590884	ARC3011	Rectifier
2590900	ARC3011	Rectifier
2590941	AR3005	Rotor
2595013	IM4001	Ignition Module
2600001	AFP3002	FW pulley
2600161	AFP3008	FW pulley
2600166A	AFP3010	FW pulley
2601052	AFP3009	FW pulley
2601593	AFP3012	FW pulley
2601991	AFP3015	FW pulley
2601992	AFP3010	FW pulley
2602341	AFP3023	FW pulley
2602484	AFP0047	FW pulley
2602877	AFP3013	FW pulley
2602881	AFP3018	FW pulley
2603330	AFP3020	FW pulley
2603530	AFP3009	FW pulley
2604126	AFP3021	FW pulley
2604211	AFP3018	FW pulley
2604504	AFP0010	FW pulley
2604507	AFP3023	FW pulley
2604640	AFP3021	FW pulley
2604641	AFP3020	FW pulley
2604787	AFP0033	FW pulley
2605275	A3103	Alternator
2606333	A3078	Alternator
2606334	A4074	Alternator
2607208	A3032	Alternator
2607209	A5024	Alternator
2607209A	A5024	Alternator
2650319	AFP3024	FW pulley
2655139	AFP0002	FW pulley
2655476	A9004	Alternator
2655517	A9029	Alternator
2655703	AFP3007	FW pulley
2655866	A9036	Alternator
267400	ARC1021	Rectifier
2808323	ARE3006	Regulator
2809249	A3018	Alternator
2925330	A4012	Alternator
2926300	A4011	Alternator
2937390	A0099	Alternator
2939210	A0099	Alternator
2940022	ARE3001	Regulator
2940030	ARE3001	Regulator

VALEO	AS	PRODUCT
2940305	A0028	Alternator
2940318	ARE3001	Regulator
2940328	ARE3021	Regulator
2940357	A0103	Alternator
2940375	A0028	Alternator
2940778	A0001	Alternator
2940780	A0001	Alternator
2941121	ARE3021	Regulator
2941814	A0006	Alternator
2941983	A3088	Alternator
2950281	A0069	Alternator
2950500	A4039	Alternator
2960120	A0102	Alternator
2960150	A0030	Alternator
300082	ARC3006	Rectifier
300665	PX58	Alt. Brush set
300668	ARE3004	Regulator
300722	PX60	Alt. Brush set
300725	ARE3011	Regulator
300744	ARE3013	Regulator
300774	AR3008	Rotor
300795	ARE3004	Regulator
300806	ARE3004	Regulator
300820	ARE3003	Regulator
300830	ARE3003	Regulator
300868	ARE3004	Regulator
300883	ARE3011	Regulator
300883Y	ARE3011	Regulator
300884	ARE3003	Regulator
300894	ARE3004	Regulator
300901	ARE3004	Regulator
300903	ARC3022	Rectifier
341410	ARC3020	Rectifier
350011	ARC3027	Rectifier
432538	S0183	Starter
432565	S3014	Starter
432566	S3015	Starter
432569	S9043	Starter
432572	S9043	Starter
432590	S3004	Starter
432591	S3005	Starter
432606	S0050	Starter
432614	S3015	Starter
432621	S3015	Starter
432622	S3004	Starter
432623	S3005	Starter
432628	S3004	Starter
432631	S3011	Starter
432632	S0088	Starter
432633	S3054	Starter
432636	S3009	Starter
432637	S3001	Starter
432643	S4022	Starter
432644	S3040	Starter
432670	S3030	Starter
432672	S3001	Starter
432673	S3013	Starter
432675	S0087	Starter
432684	S3001	Starter
432728	A3045	Alternator
432739	A3013	Alternator
432764	A3007	Alternator
432783	A3001	Alternator
432793	A3046	Alternator
432799	A3044	Alternator
432849	A0098	Alternator
432854	A0069	Alternator
432989	A0014	Alternator
432991	A0012	Alternator
432998	A0004	Alternator
433016	S0050	Starter
433042	A3048	Alternator
433044	A0028	Alternator
433065	A3009	Alternator
433079	A3004	Alternator
433096	A3006	Alternator
433097	A3050	Alternator
433115	A4059	Alternator
433118	A4059	Alternator
433133	A3043	Alternator
433138	A0031	Alternator
433149	A3008	Alternator
433154	A3020	Alternator
433162	A3015	Alternator
433188	A3016	Alternator
433190	A3057	Alternator
433215	S0236	Starter
433233	S0132	Starter
433246	S3014	Starter
433247	S3014	Starter
433249	S3015	Starter
433256	S0183	Starter
433264	S0050	Starter
433269	S0046	Starter
433276	S4033	Starter
433279	S0128	Starter
433282	S4036(MM)R	Starter
433292	S4007	Starter
433295	S0219(BOSCH)R	Starter
433297	S1013	Starter
433303	S0004	Starter
433305	S0084	Starter
433309	S3015	Starter
433311	S3005	Starter
433314	S9043	Starter
433315	S9043	Starter
433316	S9021	Starter
433318	S9044	Starter
433320	S3004	Starter
433321	S3031	Starter
433324	S0084	Starter
433325	S4039	Starter
433326	S0236	Starter
433332	S3001	Starter
433335	S0077	Starter
433336	S0014	Starter
433340	S0069	Starter
433344	S0217	Starter
433347	S0247	Starter
433348	S0204	Starter
433358	A3013	Alternator
433371	A3046	Alternator
433438	A3045	Alternator
433441	A3009	Alternator
433444	A3048	Alternator
433447	A3007	Alternator
433449	A3001	Alternator
433450	A3046	Alternator
433451	A3002	Alternator
433453	A3001	Alternator
433457	A3012	Alternator
433459	A3006	Alternator
433460	A3003	Alternator
433462	A3002	Alternator
433464	A3043	Alternator
433466	A3044	Alternator
433697	S1013	Starter
434005	A0030	Alternator
434009	A0101	Alternator
434010	A0101	Alternator
434013	A0088	Alternator
434016	A0021	Alternator
434026	A0022	Alternator
434027	A0021	Alternator
434028	A0034	Alternator
434029	A0053	Alternator
434030	A0053	Alternator
434032	A0175	Alternator
434034	A0075	Alternator
434035	A0022	Alternator
434036	A0053	Alternator
436002	S0016	Starter
436003	A0129	Alternator
436014	S0015	Starter
436016	S0050	Starter
436017	S0038	Starter
436019	S0072	Starter
436020	S0045	Starter
436022	S0072	Starter
436027	S0205	Starter
436028	S0132	Starter
436029	S0133	Starter
436034	S0126	Starter
436035	S0057	Starter
436037	S0111	Starter
436038	S0066	Starter
436042	S0043	Starter
436043	S0047	Starter
436044	S0110	Starter
436045	S0132	Starter
436047	S0187	Starter
436050	S3025	Starter
436051	S3001	Starter
436052	S0042	Starter
436053	S5016	Starter
436056	S1013	Starter
436058	S3015	Starter
436059	S3015	Starter
436060	S3004	Starter
436061	S0183	Starter
436062	S3010	Starter
436064	S3009	Starter
436065	S3009	Starter
436070	S0117	Starter
436073	S0116	Starter
436074	S0152	Starter

VALEO	AS	PRODUCT
436075	A0161	Alternator
436077	S0115	Starter
436079	S3011	Starter
436081	S3004	Starter
436084	S3015	Starter
436085	S0055	Starter
436090	S3054	Starter
436095	S3047	Starter
436096	S0150	Starter
436097	S3047	Starter
436098	S3047	Starter
436103	A4065	Alternator
436109	A0012	Alternator
436112	A4065	Alternator
436113	A4081	Alternator
436114	A4059	Alternator
436118	A4063	Alternator
436121	A0069	Alternator
436146	A0069	Alternator
436208	A0098	Alternator
436211	A0103	Alternator
436212	A0103	Alternator
436225	A0141	Alternator
436228	A0028	Alternator
436230	A4063	Alternator
436239	A4065	Alternator
436240	A0090	Alternator
436242	A4044	Alternator
436243	A4065	Alternator
436244	A4044	Alternator
436250	A3006	Alternator
436254	A3011	Alternator
436255	A3008	Alternator
436256	A3014	Alternator
436258	A3020	Alternator
436265	A0004	Alternator
436266	A0014	Alternator
436267	A0013	Alternator
436269	A4009	Alternator
436272	A0084	Alternator
436281	A3038	Alternator
436291	A0093	Alternator
436292	A0094	Alternator
436297	A0134	Alternator
436299	A0086	Alternator
436300	A0070	Alternator
436309	A3004	Alternator
436312	A3049	Alternator
436313	A3022	Alternator
436314	A3005	Alternator
436316	A3046	Alternator
436338	A3015	Alternator
436340	A3021	Alternator
436345	A3016	Alternator
436346	A3039	Alternator
436348	A3099R	Alternator
436349	A3001	Alternator
436351	A3100R	Alternator
436360	A3001	Alternator
436363	A0202	Alternator
436366	A3057	Alternator
436372	A3010	Alternator
436378	A3042	Alternator
436380	A3075	Alternator
436381	A3064	Alternator
436385	A3062	Alternator
436387	A3064	Alternator
436388	A3064	Alternator
436393	A3059	Alternator
436394	A0023	Alternator
436395	A0023	Alternator
436412	A0058	Alternator
436414	A0014	Alternator
436416	A4029	Alternator
436417	A0023	Alternator
436418	A0203	Alternator
436419	A0030	Alternator
436420	A0102	Alternator
436422	A0087	Alternator
436423	A0001	Alternator
436424	A0001	Alternator
436425	A0020	Alternator
436426	A0020	Alternator
436427	A0097	Alternator
436428	A0001	Alternator
436429	A0109	Alternator
436430	A0109	Alternator
436433	A0026	Alternator
436437	A0099	Alternator
436438	A0009	Alternator
436439	A0100	Alternator
436440	A0108	Alternator
436442	A0131	Alternator
436443	A0006	Alternator
436444	A0077	Alternator
436446	A4008	Alternator
436449	A0078	Alternator
436452	A3044	Alternator
436453	A3001	Alternator
436454	A3014	Alternator
436458	A3044	Alternator
436459	A3026	Alternator
436460	A3001	Alternator
436462	A3026	Alternator
436478	A3096	Alternator
436481	A4003	Alternator
436482	A0131	Alternator
436483	A0079	Alternator
436484	A0077	Alternator
436489	A3029	Alternator
436490	A3040	Alternator
436505	A2036	Alternator
436506	A2036	Alternator
436527	A2024	Alternator
436541	A6017	Alternator
436547	A4015	Alternator
436556	A0179	Alternator
436559	A0109	Alternator
436567	A0055	Alternator
436568	A0017	Alternator
436571	A0017	Alternator
436574	A0015	Alternator
436576	A0094	Alternator
436578	A0020	Alternator
436585	A0109	Alternator
436586	A4030	Alternator
436587	A0107	Alternator
436589	A0016	Alternator
436590	A0010	Alternator
436591	A0002	Alternator
436594	A3025	Alternator
436598	A0016	Alternator
436603	S0087	Starter
436607	A3066	Alternator
436610	A5027	Alternator
436613	A3022	Alternator
436618	A3031	Alternator
436619	A3076	Alternator
436626	A0015	Alternator
436633	A0093	Alternator
436635	A3019	Alternator
436636	A3041	Alternator
436640	A3081	Alternator
436642	A0081	Alternator
436643	A3095	Alternator
436644	A0041	Alternator
436645	A3004	Alternator
436650	A0023	Alternator
436655	A0157	Alternator
436663	A3100R	Alternator
436665	A3065	Alternator
436666	A3024	Alternator
436667	A0005	Alternator
436668	A0163	Alternator
436673	A3018	Alternator
436674	A3018	Alternator
436683	A1001	Alternator
436687	A4011	Alternator
436699	A4067	Alternator
436701	A1014	Alternator
436707	A3100R	Alternator
436718	A0114	Alternator
436720	A1010	Alternator
436721	A0115	Alternator
436724	A2020	Alternator
436725	A2005	Alternator
436728	A3089	Alternator
436729	A3089	Alternator
436730	A3088	Alternator
436732	A3058	Alternator
436733	A3090	Alternator
436735	A3092	Alternator
436739	A3091	Alternator
436741	A4052	Alternator
436743	A3111	Alternator
436746	A0157	Alternator
436748	A3079	Alternator
436753	A3036	Alternator
436755	A4001	Alternator
436774	A4012	Alternator
437058	A0110	Alternator
437111	A4041	Alternator
437112	A3028	Alternator
437113	A2004	Alternator
437114	A3082	Alternator
437115	A0071	Alternator

VALEO	AS	PRODUCT
437116	A3072	Alternator
437117	A0162	Alternator
437119	A1014	Alternator
437120	A2005	Alternator
437125	A0005	Alternator
437126	A0114	Alternator
437130	A2025	Alternator
437131	A2027	Alternator
437134	A2001	Alternator
437138	A3017	Alternator
437139	A3023	Alternator
437141	A3090	Alternator
437144	A5007	Alternator
437146	A5006	Alternator
437147	A5001	Alternator
437148	A2002	Alternator
437151	A5013	Alternator
437152	A2009	Alternator
437159	A2027	Alternator
437160	A3094	Alternator
437162	A5028	Alternator
437171	A3027	Alternator
437172	A3083	Alternator
437173	A3108	Alternator
437174	A0050	Alternator
437176	A3054	Alternator
437178	A3108	Alternator
437179	A2026	Alternator
437180	A2016	Alternator
437181	A0051	Alternator
437186	A3069	Alternator
437187	A3022	Alternator
437188	A0143	Alternator
437190	A4076	Alternator
437192	A3032	Alternator
437195	A3110	Alternator
437198	A3092	Alternator
437201	A3090	Alternator
437202	A3089	Alternator
437208	A3037	Alternator
437210	A3051	Alternator
437213	A0116	Alternator
437222	A0144	Alternator
437224	A0067	Alternator
437306	A3079	Alternator
437308	A3030	Alternator
437309	A3087	Alternator
437311	A0044	Alternator
437312	A0206	Alternator
437316	A0027	Alternator
437317	A0059	Alternator
437322	A3073	Alternator
437325	A3030	Alternator
437330	A0156	Alternator
437337	A6001	Alternator
437338	A9005	Alternator
437339	A3071	Alternator
437341	A0046	Alternator
437343	A3069	Alternator
437345	A4076	Alternator
437346	A3082	Alternator
437347	A3077	Alternator
437348	A0050	Alternator
437349	A3053	Alternator
437351	A3035	Alternator
437352	A3059	Alternator
437355	A3032	Alternator
437358	A3108	Alternator
437361	A3063	Alternator
437362	A0162	Alternator
437364	A0195	Alternator
437365	A0160	Alternator
437366	A0157	Alternator
437367	A0071	Alternator
437369	A0048	Alternator
437370	A4047	Alternator
437373	A3106	Alternator
437374	A0216	Alternator
437375	A0217	Alternator
437376	A0067	Alternator
437377	A3033	Alternator
437379	A4011	Alternator
437380	A4013	Alternator
437382	A4041	Alternator
437385	A0148	Alternator
437387	A0153	Alternator
437388	A0197	Alternator
437390	A4001	Alternator
437391	A0152	Alternator
437392	A0118	Alternator
437396	A0125	Alternator
437400	A0127	Alternator
437401	A0037	Alternator
437402	A0056	Alternator
437403	A0188	Alternator
437404	A0042	Alternator
437405	A0106	Alternator
437406	A3094	Alternator
437407	A0142	Alternator
437409	A3056	Alternator
437410	A3087	Alternator
437411	A0011	Alternator
437415	A3085R	Alternator
437417	A3087	Alternator
437419	A0037	Alternator
437420	A3109	Alternator
437421	A3094	Alternator
437422	A1011	Alternator
437427	A4019	Alternator
437432	A3105	Alternator
437433	A3084R	Alternator
437434	A3052	Alternator
437436	A3074	Alternator
437437	A3034	Alternator
437439	A3068	Alternator
437440	A0007	Alternator
437441	A0011	Alternator
437442	A0007	Alternator
437444	A3101	Alternator
437445	A3102	Alternator
437449	A0220	Alternator
437450	A3098R	Alternator
437451	A0221	Alternator
437452	A3070	Alternator
437453	A9023	Alternator
437454	A0190	Alternator
437456	A0181	Alternator
437457	A3067	Alternator
437458	A0142	Alternator
437460	A5024	Alternator
437461	A3032	Alternator
437464	A1009	Alternator
437468	A0076	Alternator
437469	A0076	Alternator
437470	A3097	Alternator
437471	A0142	Alternator
437472	A3074	Alternator
437473	A3078	Alternator
437474	A3055	Alternator
437475	A3104	Alternator
437476	A0008	Alternator
437477	A0080	Alternator
437480	A4022	Alternator
437482	A0034	Alternator
437483	A0033	Alternator
437485	A0149	Alternator
437486	A0073	Alternator
437497	A2003	Alternator
437499	A0114	Alternator
437501	A2006	Alternator
437503	A3078	Alternator
437504	A3055	Alternator
437509	A6009	Alternator
437510	A4020	Alternator
437513	A0040	Alternator
437514	A6012	Alternator
437515	A5026	Alternator
437518	A0198	Alternator
437523	A0104	Alternator
437526	A0190	Alternator
437534	A0032	Alternator
437540	A0035	Alternator
437546	A0052	Alternator
437551	A4018	Alternator
437552	A0003	Alternator
437554	A3080	Alternator
437558	A3052	Alternator
437561	A0019	Alternator
437564	A3112	Alternator
437575	A3074	Alternator
437583	A3070	Alternator
437587	A0114	Alternator
437588	A0029	Alternator
437594	A0025	Alternator
437596	A0036	Alternator
437604	A0225	Alternator
437609	A0061	Alternator
437610	A0049	Alternator
437611	A0066	Alternator
437612	A5033	Alternator
437614	A0019	Alternator
437615	A0173	Alternator
437618	A0186	Alternator
437619	A4021	Alternator
437620	A4028	Alternator
437621	A0032	Alternator

VALEO	AS	PRODUCT
437622	A0044	Alternator
437623	A4035	Alternator
437625	A0035	Alternator
437626	A0205R	Alternator
437629	A0111	Alternator
437630	A4061	Alternator
437631	A4062	Alternator
437634	A9003	Alternator
437635	A4023	Alternator
437636	A0187	Alternator
437639	A5010	Alternator
437642	A0032	Alternator
437643	A6009	Alternator
437644	A4020	Alternator
437648	A5036	Alternator
437651	A1013	Alternator
437652	A4024	Alternator
437653	A0054	Alternator
437655	A0151	Alternator
437657	A0111	Alternator
437659	A0068	Alternator
437661	A0036	Alternator
437666	A1004	Alternator
437668	A4060	Alternator
437669	A4004	Alternator
437670	A4017	Alternator
437672	A0140	Alternator
437675	A0003	Alternator
437682	A5008	Alternator
437683	A2008	Alternator
437685	A2012	Alternator
437688	A9002	Alternator
437690	A0043	Alternator
437691	A4075	Alternator
437697	A5017	Alternator
437704	A1003	Alternator
437707	A6024	Alternator
437710	A0158	Alternator
437711	A0061	Alternator
437713	A0172	Alternator
437724	A2034	Alternator
437729	A0173	Alternator
437731	A2009	Alternator
437734	A4033	Alternator
437737	A0223	Alternator
437754	A0177	Alternator
437756	A4005	Alternator
437766	A2032	Alternator
437774	A4031	Alternator
437777	A2012	Alternator
437780	A4049	Alternator
437787	A4001	Alternator
437795	A0104	Alternator
437796	A2013	Alternator
437801	A0173	Alternator
437802	A0060	Alternator
437813	A4065	Alternator
437814	A4007	Alternator
437815	A4007	Alternator
437825	A4032	Alternator
437828	A1005	Alternator
437842	A2007	Alternator
437848	A2002	Alternator
437851	A4006	Alternator
437852	A4026	Alternator
437860	A2028	Alternator
437862	A0113	Alternator
437869	A4051	Alternator
437876	A2014	Alternator
437881	A2026	Alternator
438010	S0097	Starter
438011	S3056	Starter
438014	S0126	Starter
438015	S3063	Starter
438017	S3053	Starter
438027	S3020	Starter
438030	S3002	Starter
438041	S0003	Starter
438043	S0008	Starter
438045	S0065	Starter
438047	S0220(BOSCH)R	Starter
438051	S0021	Starter
438053	S0105	Starter
438054	S3008	Starter
438061	S9031	Starter
438065	S9001	Starter
438068	S3002	Starter
438069	S3002	Starter
438074	S3052	Starter
438075	S3041	Starter
438076	S3025	Starter
438077	S3026	Starter
438079	S3020	Starter
438081	S3021	Starter
438082	S3063	Starter
438085	S3024	Starter
438088	S3039	Starter
438090	S3058R	Starter
438093	S3019	Starter
438095	S3058R	Starter
438096	S3059	Starter
438097	S5002	Starter
438105	S5002	Starter
438110	S3008	Starter
438111	S3060	Starter
438112	S3064	Starter
438118	S5020	Starter
438121	S5006	Starter
438123	S5005	Starter
438131	S0098	Starter
438133	S3016	Starter
438134	S3008	Starter
438135	S3051	Starter
438137	S3036	Starter
438141	S2005	Starter
438144	S4025	Starter
438145	S3060	Starter
438148	S9014	Starter
438152	S0248	Starter
438156	S3022	Starter
438158	S3024	Starter
438159	S2017	Starter
438162	S3028	Starter
438163	S3012	Starter
438165	S3027	Starter
438166	S3029	Starter
438168	S3017	Starter
438169	S0018	Starter
438170	S3024	Starter
438171	S3055	Starter
438172	S3044	Starter
438173	S3043	Starter
438174	S3037	Starter
438175	S0090	Starter
438176	S0243	Starter
438178	S2002	Starter
438183	S3003	Starter
438186	S0017	Starter
438189	S3057	Starter
438190	S3038	Starter
438192	S3023	Starter
438193	S3027	Starter
438198	S6016	Starter
438199	S0029	Starter
438202	S3061	Starter
438210	S5027	Starter
438217	S3061	Starter
438224	S5035	Starter
439000	A0202	Alternator
439001	A0131	Alternator
439003	A0077	Alternator
439005	A3064	Alternator
439007	A0161	Alternator
439012	A0078	Alternator
439025	A3096	Alternator
439030	A4003	Alternator
439031	A0131	Alternator
439034	A4018	Alternator
439038	A3075	Alternator
439039	A3029	Alternator
439053	A3066	Alternator
439056	A3022	Alternator
439062	A3076	Alternator
439064	A3019	Alternator
439065	A3041	Alternator
439069	A3081	Alternator
439072	A3095	Alternator
439079	A0023	Alternator
439093	A3065	Alternator
439094	A3024	Alternator
439095	A0005	Alternator
439181	A3042	Alternator
439198	A0133	Alternator
439206	A3058	Alternator
439208	A3092	Alternator
439212	A3091	Alternator
439216	A3111	Alternator
439223	A0157	Alternator
439230	A3028	Alternator
439231	A3059	Alternator
439232	A3082	Alternator
439234	A0071	Alternator
439235	A3072	Alternator
439236	A0162	Alternator
439240	A3001	Alternator
439241	A0016	Alternator

VALEO	AS	PRODUCT
439243	A3013	Alternator
439244	A0005	Alternator
439245	A0114	Alternator
439248	A3023	Alternator
439252	A3094	Alternator
439257	A3027	Alternator
439261	A0050	Alternator
439263	A3054	Alternator
439265	A3108	Alternator
439270	A3022	Alternator
439271	A3109	Alternator
439275	A3032	Alternator
439279	A3110	Alternator
439282	A3092	Alternator
439285	A3090	Alternator
439286	A3089	Alternator
439292	A3037	Alternator
439294	A3051	Alternator
439296	A0144	Alternator
439298	A0067	Alternator
439302	A3079	Alternator
439305	A3087	Alternator
439306	A0044	Alternator
439307	A0206	Alternator
439311	A0027	Alternator
439312	A0059	Alternator
439319	A3073	Alternator
439326	A3071	Alternator
439328	A0046	Alternator
439330	A3069	Alternator
439333	A3082	Alternator
439338	A0050	Alternator
439339	A3053	Alternator
439341	A3035	Alternator
439384	A9006	Alternator
439385	A9005	Alternator
439391	A3108	Alternator
439394	A3063	Alternator
439395	A0195	Alternator
439396	A0160	Alternator
439397	A0157	Alternator
439398	A0071	Alternator
439400	A0118	Alternator
439415	A5027	Alternator
439417	A3106	Alternator
439420	A0067	Alternator
439427	A1001	Alternator
439432	A0125	Alternator
439437	A0125	Alternator
439441	A0127	Alternator
439442	A0037	Alternator
439443	A0056	Alternator
439444	A0188	Alternator
439445	A0042	Alternator
439450	A3087	Alternator
439451	A3101	Alternator
439455	A3085R	Alternator
439459	A3070	Alternator
439461	A0037	Alternator
439463	A3094	Alternator
439473	A3105	Alternator
439474	A3084R	Alternator
439475	A3052	Alternator
439478	A3034	Alternator
439479	A3068	Alternator
439481	A3101	Alternator
439482	A3102	Alternator
439485	A3098R	Alternator
439486	A0221	Alternator
439487	A3070	Alternator
439488	A9023	Alternator
439489	A0190	Alternator
439491	A0181	Alternator
439493	A0142	Alternator
439494	A5024	Alternator
439495	A3032	Alternator
439498	A0076	Alternator
439500	A0076	Alternator
439501	A3097	Alternator
439502	A0142	Alternator
439503	A3074	Alternator
439504	A3078	Alternator
439505	A4074	Alternator
439506	A3104	Alternator
439509	A2001	Alternator
439521	A5023	Alternator
439523	A3078	Alternator
439524	A4074	Alternator
439525	A2006	Alternator
439529	A0040	Alternator
439540	A0032	Alternator
439555	A0003	Alternator
439557	A3080	Alternator
439565	A3112	Alternator
439567	A3070	Alternator
439571	A3084R	Alternator
439593	A3103	Alternator
439604	A3098R	Alternator
439638	S0127	Starter
440003	A0171	Alternator
440007	A5024	Alternator
440012	A3084R	Alternator
440024	A4031	Alternator
440026	A2011	Alternator
440027	A0092	Alternator
440048	A0178	Alternator
440051	A1014	Alternator
440054	A0047	Alternator
440055	A4079	Alternator
440057	A3107	Alternator
440058	A2031	Alternator
440068	A3103	Alternator
440076	A0101	Alternator
440077	A0088	Alternator
440079	A0021	Alternator
440082	A0022	Alternator
440083	A0021	Alternator
440103	A9008	Alternator
440104	A9008	Alternator
440107	A3098R	Alternator
440115	A2006	Alternator
440116	A2030	Alternator
440119	A9035	Alternator
440132	A0120	Alternator
440192	A9011	Alternator
440193	A9012	Alternator
440194	A4001	Alternator
440195	A4080	Alternator
440196	A5002	Alternator
440212	A0165	Alternator
440214	A5023	Alternator
440228	A0038	Alternator
440229	A0189	Alternator
440230	A0127	Alternator
440234	A5009	Alternator
440235	A0167	Alternator
442911	SS2004	Starter solenoid
455324	S0144	Starter
455502	S0022	Starter
455505	S0151	Starter
455506	S5014	Starter
455508	S0127	Starter
455509	S3047	Starter
455511	S4039	Starter
455512	S3009	Starter
455514	S0084	Starter
455516	S0068	Starter
455517	S0118	Starter
455518	S0092	Starter
455519	S0145	Starter
455520	S4021	Starter
455522	S0221(BOSCH)R	Starter
455524	S0008	Starter
455527	S0067	Starter
455528	S0002	Starter
455529	S0002	Starter
455530	S0003	Starter
455531	S0001	Starter
455532	S0041	Starter
455533	S0197	Starter
455534	S0010	Starter
455535	S0220(BOSCH)R	Starter
455536	S0107	Starter
455539	S0063	Starter
455541	S0065	Starter
455542	S0023	Starter
455545	S9054	Starter
455548	S0062	Starter
455550	S3001	Starter
455553	S4022	Starter
455554	S0143	Starter
455561	S5002	Starter
455562	S5002	Starter
455567	S2015	Starter
455581	S5017	Starter
455582	S5014	Starter
455592	S6002	Starter
455595	S6001	Starter
455604	S6009	Starter
455605	S6002	Starter
455606	S5012	Starter
455607	S5002	Starter
455609	S5014	Starter
455612	S6013	Starter
455614	S0235	Starter
455615	S0151	Starter

VALEO	AS	PRODUCT
455616	S0011	Starter
455618	S0002	Starter
455621	S0067	Starter
455622	S0040	Starter
455624	S0144	Starter
455625	S0077	Starter
455629	S0142	Starter
455634	S3045	Starter
455661	S0247	Starter
455665	S5014	Starter
455671	S0044	Starter
455672	S0033	Starter
455673	S0190R	Starter
455674	S0029	Starter
455676	S0052	Starter
455678	S9008	Starter
455680	S0054	Starter
455688	S3048	Starter
455691	S3002	Starter
455693	S3030	Starter
455695	S3001	Starter
455696	S0217	Starter
455697	S3013	Starter
455699	S0088	Starter
455700	S1013	Starter
455702	S3049	Starter
455704	S3046	Starter
455719	S3001	Starter
455720	S0026	Starter
455722	S3007	Starter
455723	S3034	Starter
455724	S0124	Starter
455725	S0161	Starter
455728	S0104	Starter
455733	S0097	Starter
455734	S3056	Starter
455736	S0126	Starter
455737	S3063	Starter
455738	S3004	Starter
455739	S3053	Starter
455744	S2002	Starter
455746	S0069	Starter
455747	S3020	Starter
455748	S3010	Starter
455749	S3002	Starter
455801	S3026	Starter
455871	S0021	Starter
455872	S4020	Starter
455873	S0105	Starter
455876	S3008	Starter
455879	S0098	Starter
455881	S0165	Starter
455886	S2004	Starter
455887	S2004	Starter
455889	S0093	Starter
455892	S9015	Starter
455894	S0157	Starter
455895	S9001	Starter
455896	S0161	Starter
455899	S0017	Starter
455900	S0017	Starter
455901	S5016	Starter
455904	S0247	Starter
455905	S5005	Starter
455906	S5008	Starter
455907	S5019	Starter
455910	S5025	Starter
455911	S2007	Starter
455918	S5018	Starter
455919	S5018	Starter
455924	S0238	Starter
455925	S6004	Starter
455926	S0151	Starter
455927	S0025	Starter
455928	S3002	Starter
455929	S3002	Starter
455930	S3041	Starter
455933	S0039	Starter
455936	S3052	Starter
455939	S0025	Starter
455940	S2002	Starter
455942	S0083	Starter
455943	S3001	Starter
455946	S3005	Starter
455947	S0087	Starter
455949	S3020	Starter
455950	S3021	Starter
455951	S3063	Starter
455954	S3024	Starter
455955	S3032	Starter
455957	S3039	Starter
455959	S3058R	Starter
455962	S3019	Starter
455963	S5002	Starter
455971	S3058R	Starter
455972	S3059	Starter
455973	S3003	Starter
455974	S3008	Starter
455975	S3060	Starter
455976	S3064	Starter
455977	S9010	Starter
455979	S0131	Starter
455981	S4016	Starter
455982	S3016	Starter
455983	S3008	Starter
455984	S3051	Starter
455985	S3022	Starter
458041	S3026	Starter
458116	S0096	Starter
458117	S0037	Starter
458118	S0161	Starter
458159	S3036	Starter
458160	S0027	Starter
458161	S2005	Starter
458162	S4025	Starter
458163	S3060	Starter
458167	S0248	Starter
458168	S0103	Starter
458169	S0036	Starter
458170	S3022	Starter
458172	S3024	Starter
458173	S2017	Starter
458174	S0024	Starter
458175	S0076	Starter
458176	S0019	Starter
458177	S0037	Starter
458178	S3028	Starter
458179	S3012	Starter
458180	S3027	Starter
458183	S0075	Starter
458184	S0098	Starter
458185	S3029	Starter
458188	S3003	Starter
458189	S0225	Starter
458190	S0059	Starter
458191	S3017	Starter
458192	S0018	Starter
458196	S0223(BOSCH)	Starter
458198	S0074	Starter
458199	S0109	Starter
458200	S0097	Starter
458201	S0135	Starter
458205	S6016	Starter
458206	S5017	Starter
458208	S0099	Starter
458209	S0001	Starter
458210	S3024	Starter
458212	S0195	Starter
458213	S3055	Starter
458214	S3044	Starter
458215	S3043	Starter
458216	S3037	Starter
458217	S0090	Starter
458218	S0243	Starter
458219	S2001	Starter
458220	S0176	Starter
458221	S0048	Starter
458222	S0034	Starter
458224	S0141	Starter
458226	S3021	Starter
458227	S4039	Starter
458228	S3003	Starter
458229	S0103	Starter
458230	S4015	Starter
458233	S5037	Starter
458237	S3057	Starter
458238	S3038	Starter
458239	S5038	Starter
458248	S3023	Starter
458249	S3027	Starter
458260	S0020	Starter
458263	S0225	Starter
458269	S0085	Starter
458274	S0223(BOSCH)	Starter
458280	S0099	Starter
458291	S3061	Starter
458292	S0070	Starter
458293	S5055	Starter
458322	S5018	Starter
458324	S6024	Starter
458336	S0041	Starter
458340	S0216	Starter
458343	S0040	Starter
458367	S3061	Starter
458370	S0096	Starter
458371	S9002	Starter

VALEO	AS	PRODUCT
458374	S9004	Starter
458385	S0027	Starter
458386	S4035	Starter
458390	S0243	Starter
458460	S0073	Starter
458461	S0234	Starter
458464	S0030	Starter
458469	S0091	Starter
458470	S9002	Starter
458476	S0241	Starter
458477	S5040	Starter
458482	S0032	Starter
458484	S0146	Starter
458485	S0168	Starter
458486	S0089	Starter
458487	S5023	Starter
458488	S0051	Starter
458491	S5046	Starter
458492	S0094	Starter
458495	S0049	Starter
458496	S4035	Starter
458501	S5009	Starter
458504	S0064	Starter
458511	S0095	Starter
458513	S0233	Starter
458514	S0020	Starter
458517	S0056	Starter
458525	S0103	Starter
458538	S0192	Starter
458546	S5020	Starter
458548	S0163	Starter
458550	S0230	Starter
458552	S9058	Starter
458558	S5015	Starter
458566	S0106	Starter
458572	S5006	Starter
458585	S0246	Starter
458586	S0224	Starter
458587	S6026	Starter
458590	S6019	Starter
458612	S0031	Starter
458621	S6009	Starter
458624	S5024	Starter
458629	S6018	Starter
458631	S2018	Starter
493811	ARE3041	Regulator
499526	A3012	Alternator
505001	ARE3017	Regulator
505003	ARE3017	Regulator
505100	ARE3001	Regulator
510372	A0017	Alternator
510391	A4029	Alternator
512006	ASL9010	Slip ring
518039	A3042	Alternator
518052	ARE3011	Regulator
523707	ARC3004	Rectifier
523724	ARC3004	Rectifier
523726	ARC3007	Rectifier
523728	ARC3019	Rectifier
538501	S9045	Starter
541781	ARE3024	Regulator
542259	A0056	Alternator
542746	A3101	Alternator
544497	SD0043	Drive
545940	ARC3012	Rectifier
546041	ARC3035	Rectifier
549185	SD3013	Drive
549277	A3018	Alternator
557432	SD0042	Drive
559893	ARC4011	Rectifier
567051	A2001	Alternator
570490	SD0005	Drive
570904	SD0030	Drive
571332	SD0094	Drive
571400	SD0037	Drive
572587	ARE0006	Regulator
573395	ARC0051	Rectifier
576190	ARE3002	Regulator
583041	USX91-92	Alt. Brush set
589173	SD3003	Drive
590536	ARE3013	Regulator
590538	ARE3003	Regulator
590558	ARE3004	Regulator
590568	ABE9002	Bearing
590612	ABE9001	Bearing
590625	AR3001	Rotor
590629	ABEC3003	Bearing cover
590640	ARE3048	Regulator
590650	ABEC3002	Bearing cover
590658	ABE9001	Bearing
590660	ARE3011	Regulator
590678	ARE3003	Regulator
590681	ARE3018	Regulator
590688	ARE3014	Regulator
590704	ARE3003	Regulator
590932	ARE3006	Regulator
592595	ARC3002	Rectifier
592596	ARC3003	Rectifier
592601	A3060	Alternator
592602	ARE3050	Regulator
592613	ABE9002	Bearing
592727	AR3008	Rotor
592741	ARC3010	Rectifier
592742	ARC3010	Rectifier
592745	ARC3027	Rectifier
592746	ARC3027	Rectifier
592747	ARC3009	Rectifier
592749	ARC3009	Rectifier
592754	ARC3007	Rectifier
592772	A3042	Alternator
592776	A3061	Alternator
592779	ARC3002	Rectifier
592780	ABE9004	Bearing
592785	ABEC0006	Bearing cover
592791	ARE3002	Regulator
592792	ARE3053	Regulator
592793	ARE3005	Regulator
592797	ARE3002	Regulator
592800	ARE3002	Regulator
592801	ARE3002	Regulator
592802	ARE3009	Regulator
592803	ARE3003	Regulator
592806	ARE3001	Regulator
592826	AS3002	Stator
592827	AS3002	Stator
592830	AS3002	Stator
592831	AS3012	Stator
592832	AS3005	Stator
592834	AS3001	Stator
592841	ARC3027	Rectifier
592844	ARC3011	Rectifier
592845	ARC3021	Rectifier
592846	ARC3012	Rectifier
592847	ARC3012	Rectifier
592848	ARC3035	Rectifier
592859	ABE9004	Bearing
592860	ABE9006	Bearing
592866	ABE9036	Bearing
592867	ABE9006	Bearing
592877	ARC3003	Rectifier
592880	ARC3017	Rectifier
592881	ARC3004	Rectifier
592898	AP0003	Pulley
592905	ABE9018	Bearing
592907	ABE9002	Bearing
592910	ARE3002	Regulator
592911	ARE3002	Regulator
592915	ARC3011	Rectifier
592916	ARC3035	Rectifier
592917	ARC3011	Rectifier
592920	AP0002	Pulley
592936	ABE9018	Bearing
592937	ARC3013	Rectifier
592941	APC3003	Plastic cover
592944	APC3002	Plastic cover
592946	APC3001	Plastic cover
592968	ARE4006	Regulator
593131	ARE3002	Regulator
593132	ARE3024	Regulator
593133	ARE3002	Regulator
593138	ARE3006	Regulator
593139	ARE3002	Regulator
593140	ARE3024	Regulator
593142	ARE3005	Regulator
593144	AR3006	Rotor
593145	AR3006	Rotor
593147	AR3005	Rotor
593149	AR3006	Rotor
593153	AR3006	Rotor
593154	AS3005	Stator
593158	AS3010	Stator
593160	AS3005	Stator
593174	ARC3018	Rectifier
593175	ARC3016	Rectifier
593180	ARC3003	Rectifier
593186	ARC3011	Rectifier
593191	ARE3003	Regulator
593193	ARC3017	Rectifier
593194	ARC3006	Rectifier
593199	ARC3007	Rectifier
593204	ARC3018	Rectifier
593205	ARC3028	Rectifier
593237	APC3003	Plastic cover
593238	APC3004	Plastic cover
593257	ARE3002	Regulator
593258	ARE3002	Regulator

VALEO	AS	PRODUCT
593260	ARE3012	Regulator
593275	AR3003	Rotor
593277	AS3003	Stator
593279	AS3001	Stator
593281	AS3008	Stator
593284	ARE3019	Regulator
593285	AR3007	Rotor
593287	ARC3024	Rectifier
593289	APC3005	Plastic cover
593290	ARE3007	Regulator
593299	ARC3016	Rectifier
593301	ARE3002	Regulator
593303	ARE3007	Regulator
593304	ARC3016	Rectifier
593306	ARC3018	Rectifier
593308	ARE3025	Regulator
593309	ARC3007	Rectifier
593310	ARE3007	Regulator
593312	ARE3002	Regulator
593314	AR3006	Rotor
593315	APC3006	Plastic cover
593316	ARE3016	Regulator
593319	ARE3008	Regulator
593320	ARC3015	Rectifier
593321	AR3006	Rotor
593324	ARC3016	Rectifier
593325	AR3005	Rotor
593326	ARE3002	Regulator
593328	ARC3035	Rectifier
593329	ARC3018	Rectifier
593333	ARE3023	Regulator
593334	AS3005	Stator
593335	APC3007	Plastic cover
593338	ARE3016	Regulator
593339	ARE3036	Regulator
593345	ARC3023	Rectifier
593347	ARE3045(VALEO)	Regulator
593349	ARE3007	Regulator
593350	ARE3002	Regulator
593353	ARE3023	Regulator
593357	ARE3012	Regulator
593362	ARE3032	Regulator
593368	ARE3010	Regulator
593369	ARC3029	Rectifier
593371	ARE3010	Regulator
593374	APC3007	Plastic cover
593376	APC3008	Plastic cover
593384	ARE3028	Regulator
593386	APC3011	Plastic cover
593391	ARE3045(VALEO)	Regulator
593392	ARE3010	Regulator
593395	ARE3010	Regulator
593396	ARE3028	Regulator
593397	ARC3038	Rectifier
593411	ARE3016	Regulator
593415	ARC3031	Rectifier
593417	APC3009	Plastic cover
593419	ARE3020	Regulator
593420	ARC3015	Rectifier
593423	ARE3038	Regulator
593434	ARE3037	Regulator
593435	ARC3029	Rectifier
593446	ARE3037	Regulator
593448	APC3010	Plastic cover
593454	ARE3026	Regulator
593455	ARE3010	Regulator
593458	ARE3028	Regulator
593463	ARC3039	Rectifier
593477	ARE3027	Regulator
593480	ARE3010	Regulator
593483	ARC3039	Rectifier
593490	AFP0009	FW pulley
593491	AFP0010	FW pulley
593492	AFP3001	FW pulley
593494	AFP3014	FW pulley
593499	ARC3024	Rectifier
593502	ARC3023	Rectifier
593505	ARE3027	Regulator
593511	ARE3047(VALEO)	Regulator
593514	AFP3002	FW pulley
593515	AFP3004	FW pulley
593516	AFP3011	FW pulley
593517	AFP3004	FW pulley
593521	AFP3005	FW pulley
593522	ARE3010	Regulator
593526	ARC3030	Rectifier
593527	AFP3005	FW pulley
593528	APC3012	Plastic cover
593529	ARE3030	Regulator
593532	ARE3054	Regulator
593534	ARE3027	Regulator
593535	ARE3029	Regulator
593542	ARC3029	Rectifier
593546	ARE3028	Regulator
593547	ARC3029	Rectifier
593548	ARC3038	Rectifier
593554	AFP3002	FW pulley
593563	ABE9006	Bearing
593564	ABE9003	Bearing
593566	AR3002	Rotor
593568	AR3002	Rotor
593569	AR3004	Rotor
593570	AR3002	Rotor
593572	AR3002	Rotor
593580	AS3007	Stator
593581	AS3007	Stator
593588	AS3014	Stator
593591	AS3009	Stator
593600	AFP0010	FW pulley
593608	AP3009	Pulley
593610	AFP3018	FW pulley
593618	AFP3010	FW pulley
593625	AFP0031	FW pulley
593662	ARC3032	Rectifier
593664	AR3005	Rotor
593665	ABR3001	Bracket
593666	ARE3039(VALEO)	Regulator
593668	AP3006	Pulley
593672	APC3014	Plastic cover
593674	ABE9018	Bearing
593675	ARE3044	Regulator
593688	ABE9020	Bearing
593689	ARE3029	Regulator
593690	ABE9036	Bearing
593701	AP3007	Pulley
593718	AP0002	Pulley
593728	AP3008	Pulley
593754	AP3005	Pulley
593773	ARE3035	Regulator
593774	APC3013	Plastic cover
593778	AFP0023	FW pulley
593779	ARE3047(VALEO)	Regulator
593780	ARE3034(VALEO)	Regulator
593782	AFP3012	FW pulley
593793	ARE3031	Regulator
593803	ARC3030	Rectifier
593805	APC3013	Plastic cover
593813	ARE3010	Regulator
593832	AFP3009	FW pulley
593834	APC3009	Plastic cover
593860	AFP3008	FW pulley
593874	ARE3026	Regulator
593891	AFP3008	FW pulley
593907	AFP3013	FW pulley
593920	AFP3023	FW pulley
593930	AFP3010	FW pulley
593936	ARE3028	Regulator
593941	ARE3010	Regulator
593960	AFP3020	FW pulley
593977	AFP3015	FW pulley
593983	ARE3055	Regulator
593993	ARE3052	Regulator
594029	SD3009	Drive
594031	SD3009	Drive
594040	SD3007	Drive
594042	SD3010	Drive
594045	SS3003	Starter solenoid
594047	SS3004	Starter solenoid
594048	SS3012	Starter solenoid
594053	SS3008	Starter solenoid
594060	PSX148-149	Sta. Brush set
594061	PSX146-147	Sta. Brush set
594063	PSX148-149	Sta. Brush set
594064	PSX146-147	Sta. Brush set
594070	SBH3002	S. Brush holder
594072	SBH3001	S. Brush holder
594075	SS3010	Starter solenoid
594085	S3045	Starter
594087	SS3003	Starter solenoid
594098	SS3006	Starter solenoid
594108	SD3011	Drive
594111	SD3021	Drive
594112	SA3007	Starter armature
594113	SS3003	Starter solenoid
594117	SS3004	Starter solenoid
594118	SS3013	Starter solenoid
594119	SS3004	Starter solenoid
594122	PSX146-147	Sta. Brush set
594127	PSX148-149	Sta. Brush set
594136	SD3012	Drive
594140	SS3013	Starter solenoid
594141	SG3006	Starter gear
594145	SS3003	Starter solenoid

VALEO	AS	PRODUCT
594148	SA3003	Starter armature
594152	SG3004	Starter gear
594163	SD0057	Drive
594169	PSX148-149	Sta. Brush set
594177	SD3015	Drive
594178	SS3003	Starter solenoid
594181	SS3019	Starter solenoid
594183	SS3012	Starter solenoid
594185	SD3013	Drive
594188	SS3004	Starter solenoid
594189	SS3004	Starter solenoid
594214	SD3014	Drive
594219	SA3009	Starter armature
594245	SD3004	Drive
594248	SD3017	Drive
594252	SD3015	Drive
594267	SS3003	Starter solenoid
594268	SS3003	Starter solenoid
594269	SS3003	Starter solenoid
594271	SS3004	Starter solenoid
594273	SS3003	Starter solenoid
594275	SS3003	Starter solenoid
594278	SA3007	Starter armature
594279	SD3020	Drive
594280	SS3004	Starter solenoid
594287	SD3018	Drive
594288	SS3016	Starter solenoid
594290	SBH3003	S. Brush holder
594295	SD3025	Drive
594303	SD3022	Drive
594308	SD3035	Drive
594317	PSX148-149	Sta. Brush set
594319	SS3003	Starter solenoid
594322	SS3003	Starter solenoid
594325	SS3003	Starter solenoid
594344	SA3007	Starter armature
594345	SD3019	Drive
594348	SS3021	Starter solenoid
594351	PSX155	Sta. Brush set
594361	SD3023	Drive
594365	SS3013	Starter solenoid
594370	SS3003	Starter solenoid
594381	SBH3003	S. Brush holder
594382	SD3029	Drive
594386	PSX148-149	Sta. Brush set
594389	SD3024	Drive
594391	SS3017	Starter solenoid
594392	SS3018	Starter solenoid
594395	SG3005	Starter gear
594410	SD3027	Drive
594426	SS3013	Starter solenoid
594436	SD3031	Drive
594451	SD3030	Drive
594465	SD3036	Drive
594472	SD3041	Drive
594479	SBH3003	S. Brush holder
594488	SBR3003	Starter bracket
594502	SBR3004	Starter bracket
594518	SA3008	Starter armature
594519	SA3011	Starter armature
594526	SA3006	Starter armature
594528	SA3001	Starter armature
594529	SA3005	Starter armature
594530	SA3001	Starter armature
594531	SA3005	Starter armature
594534	SF3001	Starter field coil
594535	SF3001	Starter field coil
594538	SG3001	Starter gear
594539	SG3001	Starter gear
594541	SG3001	Starter gear
594569	SBR3002	Starter bracket
594579	SBR3001	Starter bracket
594604	SS3003	Starter solenoid
594607	SS3004	Starter solenoid
594631	SD3039	Drive
594657	SD3032	Drive
594699	SG3005	Starter gear
594704	SS3004	Starter solenoid
595210	AFP3018	FW pulley
595226	AFP3016	FW pulley
595239	AFP3019	FW pulley
595243	ARE3051(VALEO)	Regulator
595253	ARE3046(VALEO)	Regulator
595258	AFP3022	FW pulley
595286	AFP9011	FW pulley
595325	ARE3049(VALEO)	Regulator
595333	AFP3025	FW pulley
595362	ARC3032	Rectifier
597249	ARC3010	Rectifier
599102	ARE3055	Regulator
600001	A9004	Alternator
600003	A5018	Alternator
600005	A9018	Alternator
600012	A9001	Alternator
600017	A9029	Alternator
600019	A9010	Alternator
600024	A9018	Alternator
600028	A9029	Alternator
600029	A9029	Alternator
600037	A5036	Alternator
600041	A5027	Alternator
600043	A5011	Alternator
600044	A9009	Alternator
600046	A9019	Alternator
600049	A9018	Alternator
600058	S5034	Starter
600076	S5019	Starter
600077	S5019	Starter
600078	S3062	Starter
618691	USX91-92	Alt. Brush set
618692	USX91-92	Alt. Brush set
6681550015	AFP3001	FW pulley
691468	ARE3018	Regulator
71111703	AS3006	Stator
71215103	ARC3025	Rectifier
71215403	ARC3025	Rectifier
71215603	ARC3027	Rectifier
71216903	ARC3025	Rectifier
72590602	ARE3004	Regulator
72590702	ARE3004	Regulator
72590902	ARE3003	Regulator
72591202	ARE3004	Regulator
8 tooth armature	SG3003	Starter gear
808424	ARE3024	Regulator
8253505	S0225	Starter
893175	ARC3016	Rectifier
940677	ARC3020	Rectifier
9AR2533	A4012	Alternator
9AR2533P	A4012	Alternator
9AR2604P	A4012	Alternator
9AR2919	A4012	Alternator
9RC2047	ARE3014	Regulator
9RC2055	ARE3005	Regulator
9RC2062	ARE3005	Regulator
9RC7036	ARE3017	Regulator
9RC7108	ARE3016	Regulator
A0002655221	A2006	Alternator
A0002655517	A9029	Alternator
A105612A	ARC3022	Rectifier
A105947A	ARC3022	Rectifier
A11VI102	A4076	Alternator
A11VI106	A3032	Alternator
A11VI108	A4076	Alternator
A11VI109	A5024	Alternator
A11VI11	A3020	Alternator
A11VI21	A0202	Alternator
A11VI23	A3016	Alternator
A11VI25	A3015	Alternator
A11VI32	A3016	Alternator
A11VI33	A3016	Alternator
A11VI35	A0131	Alternator
A11VI36	A0131	Alternator
A11VI38	A3040	Alternator
A11VI40	A3015	Alternator
A11VI43	A3020	Alternator
A11VI44	A3040	Alternator
A11VI45	A3029	Alternator
A11VI46	A4003	Alternator
A11VI49	A3016	Alternator
A11VI51	A3015	Alternator
A11VI55	A3020	Alternator
A11VI56	A3040	Alternator
A11VI57	A3016	Alternator
A11VI62	A0131	Alternator
A11VI64	A0131	Alternator
A11VI66	A0202	Alternator
A11VI72	A3015	Alternator
A11VI88	A3028	Alternator
A11VI89	A4052	Alternator
A11VI99	A3032	Alternator
A13E25	A4059	Alternator
A13E26	A4059	Alternator
A13E50	A4063	Alternator
A13E63	A4018	Alternator
A13E66	A4044	Alternator
A13E67	A4044	Alternator
A13N109	A3049	Alternator
A13N120	A3048	Alternator
A13N126	A3047	Alternator
A13N13	A3045	Alternator
A13N130	A3005	Alternator
A13N133	A3004	Alternator
A13N137	A3009	Alternator
A13N14	A3045	Alternator

VALEO	AS	PRODUCT
A13N147	A3042	Alternator
A13N147M	A3042	Alternator
A13N148M	A3042	Alternator
A13N149M	A3042	Alternator
A13N151	A3012	Alternator
A13N157	A3006	Alternator
A13N158	A3050	Alternator
A13N160	A3009	Alternator
A13N161	A3008	Alternator
A13N163	A3003	Alternator
A13N164	A3003	Alternator
A13N166	A0097	Alternator
A13N171	A3002	Alternator
A13N176	A3005	Alternator
A13N177	A3012	Alternator
A13N178	A3004	Alternator
A13N183	A3012	Alternator
A13N186M	A3042	Alternator
A13N199	A3011	Alternator
A13N1M	A3042	Alternator
A13N203	A3006	Alternator
A13N206	A3008	Alternator
A13N209	A3008	Alternator
A13N210	A3009	Alternator
A13N216	A3005	Alternator
A13N220	A3012	Alternator
A13N23	A0016	Alternator
A13N230	A3011	Alternator
A13N232	A3004	Alternator
A13N235	A3008	Alternator
A13N236	A0016	Alternator
A13N236M	A0016	Alternator
A13N241	A3004	Alternator
A13N259	A3042	Alternator
A13N259M	A3042	Alternator
A13N269	A4008	Alternator
A13N27	A3009	Alternator
A13N289	A3004	Alternator
A13N293	A3013	Alternator
A13N2M	A3042	Alternator
A13N30	A3047	Alternator
A13N35M	A3042	Alternator
A13N38	A3013	Alternator
A13N43	A3013	Alternator
A13N650	A3009	Alternator
A13N88	A3007	Alternator
A13N89	A3048	Alternator
A13N92	A3049	Alternator
A13N94	A3013	Alternator
A13R221	A3045	Alternator
A13R222	A3045	Alternator
A13V02	A0031	Alternator
A13V07	A0031	Alternator
A13VI100	A0005	Alternator
A13VI102	A0081	Alternator
A13VI110	A0081	Alternator
A13VI114	A0079	Alternator
A13VI119	A0157	Alternator
A13VI121	A0077	Alternator
A13VI123	A0006	Alternator
A13VI124	A0077	Alternator
A13VI126	A0078	Alternator
A13VI13	A3044	Alternator
A13VI130	A3065	Alternator
A13VI134	A0114	Alternator
A13VI135	A0005	Alternator
A13VI137	A0041	Alternator
A13VI138	A3081	Alternator
A13VI140	A0006	Alternator
A13VI141	A3024	Alternator
A13VI150	A3065	Alternator
A13VI154	A3062	Alternator
A13VI155	A3064	Alternator
A13VI156	A3081	Alternator
A13VI160	A0157	Alternator
A13VI165	A3031	Alternator
A13VI170	A0005	Alternator
A13VI171	A3089	Alternator
A13VI172	A3090	Alternator
A13VI175	A0114	Alternator
A13VI176	A0005	Alternator
A13VI178	A3058	Alternator
A13VI179	A3111	Alternator
A13VI18	A3075	Alternator
A13VI190	A0162	Alternator
A13VI191	A3057	Alternator
A13VI195	A3079	Alternator
A13VI197	A0114	Alternator
A13VI198	A0005	Alternator
A13VI202	A3082	Alternator
A13VI203	A3017	Alternator
A13VI204	A3023	Alternator
A13VI207	A3092	Alternator
A13VI209	A3089	Alternator
A13VI210	A3089	Alternator
A13VI211	A3088	Alternator
A13VI216	A3090	Alternator
A13VI217	A3091	Alternator
A13VI220	A0005	Alternator
A13VI222	A0133	Alternator
A13VI223	A0042	Alternator
A13VI227	A3090	Alternator
A13VI23	A3038	Alternator
A13VI230	A0163	Alternator
A13VI231	A3022	Alternator
A13VI232	A0081	Alternator
A13VI237	A3058	Alternator
A13VI24	A3064	Alternator
A13VI241	A3083	Alternator
A13VI243	A3110	Alternator
A13VI246	A3069	Alternator
A13VI254	A3092	Alternator
A13VI257	A3082	Alternator
A13VI258	A3022	Alternator
A13VI259	A3079	Alternator
A13VI260	A0163	Alternator
A13VI261	A3022	Alternator
A13VI262	A0081	Alternator
A13VI264	A3090	Alternator
A13VI265	A3089	Alternator
A13VI274	A3022	Alternator
A13VI279	A3069	Alternator
A13VI281	A3057	Alternator
A13VI282	A3032	Alternator
A13VI283	A3056	Alternator
A13VI285	A3077	Alternator
A13VI286	A0162	Alternator
A13VI289	A3073	Alternator
A13VI292	A3092	Alternator
A13VI293	A0048	Alternator
A13VI300	A3079	Alternator
A13VI31	A3021	Alternator
A13VI40	A0006	Alternator
A13VI41	A0077	Alternator
A13VI51	A3039	Alternator
A13VI54	A3062	Alternator
A13VI63	A0078	Alternator
A13VI64	A3031	Alternator
A13VI70	A3064	Alternator
A13VI71	A3057	Alternator
A13VI72	A3019	Alternator
A13VI73	A3041	Alternator
A13VI76	A3076	Alternator
A13VI78	A0161	Alternator
A13VI85	A3021	Alternator
A13VI88	A3039	Alternator
A13VI94	A3022	Alternator
A13VI95	A0163	Alternator
A13VI97	A3066	Alternator
A13VI99	A0114	Alternator
A14N100	A3060	Alternator
A14N100M	A3060	Alternator
A14N102	A3025	Alternator
A14N106	A3046	Alternator
A14N112M	A3060	Alternator
A14N114	A3100R	Alternator
A14N114T	A3100R	Alternator
A14N115M	A3100R	Alternator
A14N116M	A3100R	Alternator
A14N118M	A3060	Alternator
A14N119M	A3060	Alternator
A14N13	A3046	Alternator
A14N131	A3043	Alternator
A14N132	A3014	Alternator
A14N134	A3046	Alternator
A14N137M	A3060	Alternator
A14N140	A3044	Alternator
A14N141M	A3061	Alternator
A14N142	A3026	Alternator
A14N144	A3001	Alternator
A14N150	A3046	Alternator
A14N151	A3043	Alternator
A14N163	A3001	Alternator
A14N164	A3014	Alternator
A14N171	A3026	Alternator
A14N177M	A3100R	Alternator
A14N182	A0023	Alternator
A14N183	A3059	Alternator
A14N183M	A3059	Alternator
A14N185	A0023	Alternator
A14N190	A0023	Alternator
A14N196M	A3100R	Alternator
A14N198M	A3100R	Alternator
A14N20	A3046	Alternator
A14N200M	A3061	Alternator
A14N206M	A3061	Alternator

VALEO	AS	PRODUCT
A14N207M	A3059	Alternator
A14N208M	A3059	Alternator
A14N22	A3046	Alternator
A14N28T	A3099R	Alternator
A14N3	A3099R	Alternator
A14N30M	A3100R	Alternator
A14N37	A3046	Alternator
A14N3T	A3099R	Alternator
A14N4	A3001	Alternator
A14N47M	A3060	Alternator
A14N50	A3046	Alternator
A14N53	A3002	Alternator
A14N62	A3002	Alternator
A14N64	A3046	Alternator
A14N65	A3046	Alternator
A14N69	A3046	Alternator
A14N73	A3044	Alternator
A14N74	A3025	Alternator
A14N75	A3044	Alternator
A14N81M	A3060	Alternator
A14N84	A3046	Alternator
A14N89	A3046	Alternator
A14N93	A3046	Alternator
A14R25T	A3001	Alternator
A14S054	A3094	Alternator
A14S055	A3094	Alternator
A14V01	A0070	Alternator
A14V02	A0070	Alternator
A14VI13	A3096	Alternator
A14VI14	A3095	Alternator
A14VI19	A3018	Alternator
A14VI20	A3018	Alternator
A14VI22	A0071	Alternator
A14VI23	A3036	Alternator
A14VI27	A3027	Alternator
A14VI28	A3072	Alternator
A14VI29	A3094	Alternator
A14VI34	A3087	Alternator
A14VI35	A3051	Alternator
A14VI36	A0160	Alternator
A14VI40	A3074	Alternator
A14VI41	A3051	Alternator
A14VI42	A3027	Alternator
A14VI45	A3087	Alternator
A14VI46	A3087	Alternator
A14VI47	A3087	Alternator
A14VI48	A0142	Alternator
A14VI49	A0142	Alternator
A14VI52	A3094	Alternator
A14VI53	A3094	Alternator
A518052A	ARE3011	Regulator
A541184A	ARE3048	Regulator
A546062A	ARC3021	Rectifier
A546076A	ARC3011	Rectifier
A546860A	ARC3012	Rectifier
A565526A	ARC1005	Rectifier
A600C0211	ARC5041	Rectifier
AB170036	A5036	Alternator
AB170094	A5036	Alternator
AB190025	A5027	Alternator
AB190072	A5027	Alternator
AB190097	A5011	Alternator
AB190119	A5027	Alternator
AB190205	A5011	Alternator
AB190386	A5011	Alternator
AD165439	A9007	Alternator
AD225412	A5007	Alternator
APR140AB	A5036	Alternator
APR165AA	A5006	Alternator
BM51267AR	A2002	Alternator
CD873	IM4001	Ignition Module
CD877	IM0003	Ignition Module
CED5009	SS3013	Starter solenoid
CED529	SS3001	Starter solenoid
CED533	SS3002	Starter solenoid
CED538	SS3002	Starter solenoid
CED541	SS3007	Starter solenoid
CED543	SS3009	Starter solenoid
CED544	SS3002	Starter solenoid
CED546	SS3008	Starter solenoid
CED548	SS3008	Starter solenoid
CED549	SS3006	Starter solenoid
CED550	SS3005	Starter solenoid
CED552	SS3003	Starter solenoid
CED568	SS3006	Starter solenoid
CED569	SS3004B	Starter solenoid
CED624	SS3010	Starter solenoid
D11E118	S9047	Starter
D11E120	S9043	Starter
D11E122	S0150	Starter
D11E122T	S0150	Starter
D11E131	S9043	Starter
D11E137	S9021	Starter
D11E141	S4018	Starter
D11E146	S9047	Starter
D11E154	S9021	Starter
D11E155	S4018	Starter
D11E158	S9043	Starter
D11E15H	S9021	Starter
D11E172	S0183	Starter
D11E272	S0183	Starter
D11E84	S4018	Starter
D13E11	S3047	Starter
D13E110	S3047	Starter
D13E110TE	S3047	Starter
D13E111	S3047	Starter
D13E117	S3047	Starter
D13E117TE	S3047	Starter
D13E118	S3047	Starter
D13E118TE	S3047	Starter
D13E11TE	S3047	Starter
D13E123	S3047	Starter
D13E1231TE	S3047	Starter
D13E123TE	S3047	Starter
D13HP601	S0097	Starter
D13HP603	S3034	Starter
D13HP605	S3048	Starter
D13HP607	S3049	Starter
D13HP613	S3034	Starter
D13HP702	S3046	Starter
D13HP703	S3047	Starter
D13HP709	S3034	Starter
D6G1	S3017	Starter
D6G3	S3032	Starter
D6G32	S3017	Starter
D6G33	S0100	Starter
D6G5	S3020	Starter
D6GS11	S3055	Starter
D6GS12	S3044	Starter
D6GS13	S3043	Starter
D6GS14	S3037	Starter
D6GS19	S3038	Starter
D6RA10	S3005	Starter
D6RA100	S3010	Starter
D6RA101	S3052	Starter
D6RA104	S3052	Starter
D6RA105	S3064	Starter
D6RA11	S3050	Starter
D6RA110	S3016	Starter
D6RA115	S3064	Starter
D6RA12	S3031	Starter
D6RA13	S5016	Starter
D6RA132	S3003	Starter
D6RA133	S3004	Starter
D6RA137	S3060	Starter
D6RA138	S3060	Starter
D6RA141	S3011	Starter
D6RA16	S3009	Starter
D6RA161	S3009	Starter
D6RA162	S1014	Starter
D6RA163	S1014	Starter
D6RA167	S3063	Starter
D6RA18	S3009	Starter
D6RA187	S3060	Starter
D6RA188	S3060	Starter
D6RA20	S3005	Starter
D6RA22	S3045	Starter
D6RA23	S0004	Starter
D6RA249	S3003	Starter
D6RA293	S3003	Starter
D6RA32	S1014	Starter
D6RA33	S3004	Starter
D6RA37	S3010	Starter
D6RA38	S3009	Starter
D6RA39	S4039	Starter
D6RA40	S3050	Starter
D6RA41	S3011	Starter
D6RA46	S3004	Starter
D6RA5	S3005	Starter
D6RA51	S3054	Starter
D6RA511	S3054	Starter
D6RA52	S3045	Starter
D6RA55	S3035	Starter
D6RA56	S3004	Starter
D6RA57	S3010	Starter
D6RA571	S3010	Starter
D6RA572	S3010	Starter
D6RA59	S4022	Starter
D6RA6	S3004	Starter
D6RA61	S3004	Starter
D6RA62	S1014	Starter
D6RA63	S3030	Starter
D6RA64	S3009	Starter
D6RA66	S3009	Starter
D6RA661	S3009	Starter
D6RA67	S3063	Starter

VALEO	AS	PRODUCT
D6RA72	S3031	Starter
D6RA721	S3031	Starter
D6RA73	S3004	Starter
D6RA75	S3035	Starter
D6RA76	S3013	Starter
D6RA78	S3053	Starter
D6RA8	S3009	Starter
D6RA82	S0126	Starter
D6RA83	S3020	Starter
D6RA92	S0098	Starter
D6RA93	S3003	Starter
D7E1	S3007	Starter
D7E15	S3021	Starter
D7E16	S3032	Starter
D7E18	S3020	Starter
D7E19	S3008	Starter
D7E2	S3032	Starter
D7E20	S3021	Starter
D7E22	S3008	Starter
D7E23	S3032	Starter
D7E25	S3032	Starter
D7E26	S3008	Starter
D7E27	S3012	Starter
D7E29	S3051	Starter
D7E30	S3022	Starter
D7E31	S3036	Starter
D7E32	S3022	Starter
D7E38	S3020	Starter
D7E39	S3007	Starter
D7E4	S3020	Starter
D7E40	S3022	Starter
D7E41	S3036	Starter
D7E42	S3022	Starter
D7E47	S3012	Starter
D7E5	S3032	Starter
D7E52	S4025	Starter
D7E6	S3008	Starter
D7E7	S3019	Starter
D7E8	S3020	Starter
D7EP12	S3003	Starter
D7G11	S3024	Starter
D7G26	S3057	Starter
D7G3	S3029	Starter
D7GS10	S0243	Starter
D7GS8	S0090	Starter
D7R12	S3002	Starter
D7R127	S3002	Starter
D7R13	S3001	Starter
D7R130	S3025	Starter
D7R17	S3056	Starter
D7R18	S3001	Starter
D7R19	S0026	Starter
D7R2	S3002	Starter
D7R20	S3002	Starter
D7R24	S3002	Starter
D7R25	S3001	Starter
D7R26	S3002	Starter
D7R27	S3002	Starter
D7R28	S0026	Starter
D7R281	S3040	Starter
D7R32	S3002	Starter
D7R33	S0039	Starter
D7R34	S3024	Starter
D7R35	S3001	Starter
D7R4	S3002	Starter
D7R40	S3039	Starter
D7R41	S0127	Starter
D7R43	S0026	Starter
D7R44	S3058R	Starter
D7R46	S0026	Starter
D7R47	S3058R	Starter
D7R48	S3059	Starter
D7R49	S3058R	Starter
D7R5	S3001	Starter
D7R53	S3024	Starter
D7R56	S3024	Starter
D7R57	S0017	Starter
D7R61	S0018	Starter
D7R64	S0161	Starter
D7R8	S3002	Starter
D7R9	S3002	Starter
D7RP123	S3040	Starter
D7RP204	S3024	Starter
D7RP82	S3056	Starter
D7RS129	S3041	Starter
D7RS130	S0025	Starter
D7RS131	S0005	Starter
D7RS150	S0248	Starter
D7RS29	S3041	Starter
D7RS291	S3041	Starter
D7RS30	S0025	Starter
D7RS301	S3041	Starter
D7RS31	S0005	Starter
D7RS50	S0248	Starter
D7RS57	S0017	Starter
D8E158	S0046	Starter
D8R1	S3028	Starter
D8R27	S3027	Starter
D8R29	S3027	Starter
D9E129	S1013	Starter
D9E136	S0050	Starter
D9E137	S3015	Starter
D9E138	S3015	Starter
D9E140	S0072	Starter
D9E237	S3015	Starter
D9E238	S3015	Starter
D9E276	S3015	Starter
D9E278	S3014	Starter
D9E39	S3015	Starter
D9E46	S3014	Starter
D9E48	S0004	Starter
D9E49	S0004	Starter
D9E55	S3014	Starter
D9E68	S3014	Starter
D9E76	S3015	Starter
D9E761	S3015	Starter
D9E77	S3015	Starter
D9E771	S3015	Starter
D9E772	S3015	Starter
D9E773	S3015	Starter
D9E774	S3015	Starter
D9E776	S3015	Starter
D9E78	S3014	Starter
D9E79	S3014	Starter
D9EP119	S0004	Starter
D9R112	S3001	Starter
D9R116	S3042	Starter
D9R119	S0016	Starter
D9R121	S0084	Starter
D9R144	S3042	Starter
D9R149	S0143	Starter
D9R237	S3015	Starter
D9R84	S0084	Starter
D9R90	S0236	Starter
D9RP160	S0016	Starter
FOR D7RS131	SBH3007	S. Brush holder
HD90S010	A3018	Alternator
HD90S011	A3018	Alternator
HD90S013	A3018	Alternator
HD90S013ZD	A3018	Alternator
HD90S014	A3018	Alternator
HD90S014ZD	A3018	Alternator
HD90S016ZD	A3018	Alternator
HD90S017ZD	A3018	Alternator
HD90S019ZD	A3018	Alternator
HD90S020ZD	A3018	Alternator
HK988300	S5046	Starter
M000A0240Z	S5012	Starter
M53486	S3053	Starter
MC108024	S5034	Starter
MC109021	S5034	Starter
MC109028	S5012	Starter
MC109036	S5012	Starter
MG120413	S5005	Starter
MG120445	S5046	Starter
MG122433	S5006	Starter
MP112041	S5019	Starter
NA028	A4011	Alternator
NA098	A3048	Alternator
NA181	A4029	Alternator
NA205	A3009	Alternator
NA206	A0103	Alternator
NA236	A3045	Alternator
NA243	A3007	Alternator
NA246	A3045	Alternator
NA249	A3046	Alternator
NA251	A3001	Alternator
NA255	A3013	Alternator
NA278	A3049	Alternator
NA294	A3002	Alternator
NA302	A3044	Alternator
NA315	A3025	Alternator
NA317	A3005	Alternator
NA336	A3012	Alternator
NA337	A3099R	Alternator
NA346	A3004	Alternator
NA350	A3002	Alternator
NA363	A3060	Alternator
NA365	A0001	Alternator
NA371	A0001	Alternator
NA374	A3006	Alternator
NA379	A3014	Alternator
NA380	A4059	Alternator
NA387	A3042	Alternator
NA388	A3042	Alternator
NA391	A3050	Alternator

VALEO	AS	PRODUCT
NA398	A3044	Alternator
NA399	A3026	Alternator
NA400	A3046	Alternator
NA406	A3011	Alternator
NA408	A3008	Alternator
NA415	A3021	Alternator
NA422	A3026	Alternator
NA426	A3100R	Alternator
NA433	A3015	Alternator
NA434	A3016	Alternator
NA435	A3028	Alternator
NA436	A4008	Alternator
NA437	A0006	Alternator
NA438	A0077	Alternator
NA440	A0078	Alternator
NA441	A3064	Alternator
NA442	A3057	Alternator
NA444	A0114	Alternator
NA445	A0005	Alternator
NA450	A0202	Alternator
NA454	A3020	Alternator
NA455	A0131	Alternator
NA457	A3075	Alternator
NA466	A4003	Alternator
NA467	A3041	Alternator
NA468	A3019	Alternator
NA469	A3029	Alternator
NA470	A3040	Alternator
NA475	A3031	Alternator
NA479	A3022	Alternator
NA481	A3096	Alternator
NA484	A3095	Alternator
NA488	A4044	Alternator
NA489	A4044	Alternator
NA494	A0023	Alternator
NA500	A0163	Alternator
NA503	A3081	Alternator
NA504	A0005	Alternator
NA506	A3018	Alternator
NA510	A3100R	Alternator
NA513	A3009	Alternator
NA518	A0017	Alternator
NA520	A3061	Alternator
NA524	A4052	Alternator
NA526	A3066	Alternator
NA527	A0157	Alternator
NA528	A3065	Alternator
NA529	A0157	Alternator
NA530	A3072	Alternator
NA531	A0162	Alternator
NA533	A0133	Alternator
NA534	A3058	Alternator
NA535	A3082	Alternator
NA536	A3076	Alternator
NA538	A3036	Alternator
NA543	A3089	Alternator
NA544	A3089	Alternator
NA546	A3090	Alternator
NA549	A3111	Alternator
NA551	A3079	Alternator
NA553	A3001	Alternator
NA558	A3064	Alternator
NA560	A0041	Alternator
NA561	A3064	Alternator
NB119	ARC3036	Rectifier
NC117	AS3006	Stator
NC119	AS3006	Stator
NC123	AS3004	Stator
NC126	AS3004	Stator
NC133	ARC3002	Rectifier
NC134	ARC3025	Rectifier
NC135	ARC3007	Rectifier
NC137	ARC3026	Rectifier
NC138	ARC3003	Rectifier
NC139	ARC3006	Rectifier
NC141	ARC3004	Rectifier
NC142	ARC3010	Rectifier
NC143	ARC3017	Rectifier
NC144	ARC3005	Rectifier
NC161	ARC3019	Rectifier
NC171	ARE3048	Regulator
NC175	ARE3011	Regulator
NC176	ARE3011	Regulator
NC191	ARE3011	Regulator
NC216	ARC3002	Rectifier
NC217	ARC3025	Rectifier
NC230	AS3002	Stator
NC262	AS3004	Stator
NC376	AS3003	Stator
NC388	ARC3027	Rectifier
NC730	ARC3007	Rectifier
NC760	AR3008	Rotor
NC762	AR3008	Rotor
NC936	ARC3006	Rectifier
NC945	AS3002	Stator
NC946	AR3001	Rotor
NC976	ARC3009	Rectifier
NC985	ARE3002	Regulator
NC987	ARE3005	Regulator
NC989	ARE3009	Regulator
ND055	S0236	Starter
ND057	S3014	Starter
ND058	S3015	Starter
ND059	S4039	Starter
ND076	S0150	Starter
ND079	S4018	Starter
ND094	S1013	Starter
ND108	S3005	Starter
ND109	S3031	Starter
ND110	S3005	Starter
ND114	S3015	Starter
ND121	S3004	Starter
ND122	S5016	Starter
ND131	S3032	Starter
ND134	S3003	Starter
ND135	S0016	Starter
ND136	S3004	Starter
ND138	S3002	Starter
ND140	S3045	Starter
ND145	S3015	Starter
ND146	S3047	Starter
ND147	S3042	Starter
ND152	S3001	Starter
ND155	S3011	Starter
ND156	S3004	Starter
ND159	S4022	Starter
ND162	S3040	Starter
ND163	S3001	Starter
ND164	S3030	Starter
ND165	S3007	Starter
ND168	S3056	Starter
ND169	S3001	Starter
ND170	S0126	Starter
ND171	S3004	Starter
ND172	S5029	Starter
ND204	S3002	Starter
ND209	S3020	Starter
ND210	S3054	Starter
ND212	S3032	Starter
ND216	S3008	Starter
ND217	S3013	Starter
NE053	SA3002	Starter armature
NE134	SS3009	Starter solenoid
NE138	SS3002	Starter solenoid
NE139	SS3004B	Starter solenoid
NE140	SS3009	Starter solenoid
NE155	SD3003	Drive
NE159	SS3007	Starter solenoid
NE196	SD3002	Drive
NE197	SD3001	Drive
NE202	SD3008	Drive
NE209	SD3004	Drive
NE210	SD3005	Drive
NE211	SD3006	Drive
NE212	SD3007	Drive
NE711	SD0028	Drive
NE776	SD3010	Drive
NE777	SS3003	Starter solenoid
NE778	SD3009	Drive
NE784	SD3009	Drive
NE824	SA3007	Starter armature
NE830	SD3011	Drive
NE831	SD3012	Drive
NE832	SD3010	Drive
NE834	SD3013	Drive
NE872	SD3021	Drive
NE875	SD3014	Drive
NE877	SD3015	Drive
NE883	SD3004	Drive
NE898	SS3012	Starter solenoid
NE936	SA3009	Starter armature
NE949	SD3018	Drive
NE955	SD3025	Drive
NE957	SD3022	Drive
NE971	SD3019	Drive
NF006	ARC3011	Rectifier
NF007	ARC3012	Rectifier
NF009	ARC3035	Rectifier
NF016	ARC3021	Rectifier
NF017	ARC3021	Rectifier
NF076	ARE3006	Regulator
NF094	AR3006	Rotor
NF097	AR3006	Rotor
NF100	AR3006	Rotor
SG10B012	A1001	Alternator
SG10B019	A3073	Alternator

VALEO	AS	PRODUCT
SG10B021	A3023	Alternator
SG10B023	A3056	Alternator
SG10B041	A1001	Alternator
SG11B010	A0220	Alternator
SG12B010	A0143	Alternator
SG12B011	A0045	Alternator
SG12B012	A0046	Alternator
SG12B015	A0059	Alternator
SG12B017	A3037	Alternator
SG12B018	A3054	Alternator
SG12B020	A3030	Alternator
SG12B021	A0144	Alternator
SG12B023	A0067	Alternator
SG12B024	A0206	Alternator
SG12B025	A0045	Alternator
SG12B029	A0071	Alternator
SG12B038	A3035	Alternator
SG12B040	A3053	Alternator
SG12B042	A3071	Alternator
SG12B045	A3030	Alternator
SG12B047	A0195	Alternator
SG12B049	A0046	Alternator
SG12B050	A3035	Alternator
SG12B052	A3034	Alternator
SG12B054	A0045	Alternator
SG12B055	A3063	Alternator
SG12B060	A0067	Alternator
SG12B065	A0217	Alternator
SG12B071	A3037	Alternator
SG12B074	A3109	Alternator
SG12B075	A0195	Alternator
SG12B081	A3034	Alternator
SG12B087	A0035	Alternator
SG12B090	A0059	Alternator
SG12B095	A3035	Alternator
SG12B096	A3037	Alternator
SG12B098	A3034	Alternator
SG12B108	A3035	Alternator
SG12B109	A3034	Alternator
SG12B110	A3037	Alternator
SG12B116	A3035	Alternator
SG12B123	A3037	Alternator
SG12S051	A5023	Alternator
SG12S077	A5023	Alternator
SG14B011	A3033	Alternator
SG15L012	A3085R	Alternator
SG15L013	A3084R	Alternator
SG15L020	A3084R	Alternator
SG15L023	A3084R	Alternator
SG15L026	A3085R	Alternator
SG15L027	A3084R	Alternator
SG15L034	A3084R	Alternator
SG15L035	A3084R	Alternator
SG15S010	A3093	Alternator
SG15S016	A3027	Alternator
SG15S017	A3074	Alternator
SG15S018	A3051	Alternator
SG15S019	A3105	Alternator
SG15S021	A3027	Alternator
SG15S022	A3051	Alternator
SG15S024	A0142	Alternator
SG15S025	A0142	Alternator
SG15S030	A3094	Alternator
SG15S031	A3067	Alternator
SG15S032	A3093	Alternator
SG7S015	A3032	Alternator
SG7S016	A5024	Alternator
SG8B015	A0125	Alternator
SG8B020	A3017	Alternator
SG8B022	A3032	Alternator
SG8B023	A3102	Alternator
SG8B026	A3102	Alternator
SG9B010	A0050	Alternator
SG9B011	A0050	Alternator
SG9B013	A0027	Alternator
SG9B015	A0127	Alternator
SG9B018	A0027	Alternator
SG9B019	A0056	Alternator
SG9B023	A0188	Alternator
SG9B024	A0042	Alternator
SG9B027	A0050	Alternator
SG9B029	A0157	Alternator
SG9B033	A0044	Alternator
SG9B035	A3106	Alternator
SG9B037	A3058	Alternator
SG9B038	A3082	Alternator
SG9B039	A3082	Alternator
SG9B047	A0044	Alternator
SG9B048	A3101	Alternator
SG9B050	A0216	Alternator
SG9B055	A0037	Alternator
SG9B057	A3101	Alternator
SG9B059	A0027	Alternator
SG9B064	A3032	Alternator
SG9B067	A3032	Alternator
SG9B069	A0188	Alternator
SG9B078	A0127	Alternator
SG9B087	A0027	Alternator
SG9B107	A3106	Alternator
TA000A14501	A9005	Alternator
TA000A44301	A9017	Alternator
TA000A52202	A9004	Alternator
TA000A55401	A2001	Alternator
TA000A55601	A9029	Alternator
TA000A57301	A9001	Alternator
TG11C010	A3068	Alternator
TG11C011	A3052	Alternator
TG11C015	A0181	Alternator
TG11C016	A0180	Alternator
TG11C017	A3097	Alternator
TG11C022	A3068	Alternator
TG11C034	A3052	Alternator
TG11C041	A3103	Alternator
TG11C049	A3068	Alternator
TG11C061	A3068	Alternator
TG11C062	A3052	Alternator
TG11C064	A3052	Alternator
TG11C066	A3103	Alternator
TG11C069	A3103	Alternator
TG14C011	A0190	Alternator
TG14C015	A0190	Alternator
TG15C012	A3070	Alternator
TG15C017	A0076	Alternator
TG15C018	A0221	Alternator
TG15C020	A0142	Alternator
TG15C022	A3074	Alternator
TG15C023	A3067	Alternator
TG15C028	A0142	Alternator
TG15C038	A3070	Alternator
TG15C048	A3080	Alternator
TG15C053	A0142	Alternator
TG15C054	A3074	Alternator
TG15C064	A3070	Alternator
TG15C065	A0076	Alternator
TG15C115	A3027	Alternator
TG15C116	A3051	Alternator
TG15C118	A0142	Alternator
TG15C119	A3074	Alternator
TG16C013	A3080	Alternator
TG17C010	A3098R	Alternator
TG17C016	A3112	Alternator
TG17C016B	A3112	Alternator
TG17C041	A3107	Alternator
TG17C048	A3098R	Alternator
TG17C061	A3107	Alternator
TG7S010	A3032	Alternator
TG7S011	A5024	Alternator
TG7S013	A5024	Alternator
TG7S014	A3032	Alternator
TG7S015	A5024	Alternator
TG8S010	A3104	Alternator
TG8S012	A3078	Alternator
TG8S013	A3078	Alternator
TG8S014	A3078	Alternator
TG8S017	A3028	Alternator
TG8S025	A3028	Alternator
TG9B025	A3032	Alternator
TG9B043	A3032	Alternator
TG9C013	A9023	Alternator
TG9S010	A4074	Alternator
TG9S015	A4074	Alternator
TG9S016	A4074	Alternator
TG9S021	A4074	Alternator
TG9S022	A4074	Alternator
TG9S036	A4074	Alternator
TM000A06901	S6002	Starter
TM000A08401	S3053	Starter
TM000A09501	S5047	Starter
TM000A14901	S5046	Starter
TM000A19301	S5019	Starter
TM000A23601	S3062	Starter
TM000A34101	S5026	Starter
TM000A36101	S5026	Starter
TS10E1	S3023	Starter
TS10E3	S3012	Starter
TS10E4	S3008	Starter
TS10E5	S3008	Starter
TS12E10	S0096	Starter
TS14E110	S3016	Starter
TS18E1	S0090	Starter
TS18E13	S3029	Starter
TS18E3	S0243	Starter
TS18ER123	S0243	Starter
TS22E26	S3057	Starter
TS22E5	S3061	Starter
TS22E5B	S3061	Starter

VALEO	AS	PRODUCT
TS22E8	S3061	Starter
TS22E9	S3061	Starter
TS8E1	S3007	Starter
TS8E2	S3032	Starter
TS8E3	S3022	Starter
TS8E4	S3036	Starter
TS8E5	S3022	Starter
TS8E6	S3007	Starter
VA113	A3013	Alternator
VA119	A4012	Alternator
VA131	A3007	Alternator
VA132	A0069	Alternator
VA143	A3001	Alternator
VA144	A4063	Alternator
VA145	A3046	Alternator
VA153	A3048	Alternator
VA154	A3048	Alternator
VA166	A4059	Alternator
VA203	A4081	Alternator
VA208	A3045	Alternator
VA215	A0115	Alternator
VA217	A3012	Alternator
VA221	A2036	Alternator
VA225	A2036	Alternator
VA231	A4013	Alternator
VA235	A4015	Alternator
VA237	A5028	Alternator
VA239	A0110	Alternator
VA256	A0028	Alternator
VA263	A0031	Alternator
VA264	A0031	Alternator
VA267	A3046	Alternator
VA271	A3004	Alternator
VA276	A0103	Alternator
VA278	A0094	Alternator
VA281	A3062	Alternator
VA282	A3075	Alternator
VA283	A3005	Alternator
VA285	A3057	Alternator
VA286	A3015	Alternator
VA291	A3020	Alternator
VA292	A3016	Alternator
VA293	A3039	Alternator
VA300	A4065	Alternator
VA301	A4065	Alternator
VA307	A3019	Alternator
VA308	A3041	Alternator
VA309	A4067	Alternator
VA310	A0152	Alternator
VA313	A4014	Alternator
VA323	A4013	Alternator
VA324	A4012	Alternator
VA325	A2031	Alternator
VA326	A0069	Alternator
VA331	A2024	Alternator
VA332	A2031	Alternator
VA335	A0081	Alternator
VA337	A3095	Alternator
VA338	A3022	Alternator
VA339	A3096	Alternator
VA340	A3009	Alternator
VA341	A3040	Alternator
VA344	A3011	Alternator
VA345	A3003	Alternator
VA346	A3002	Alternator
VA349	A3008	Alternator
VA350	A3014	Alternator
VA360	A3038	Alternator
VA364	A0131	Alternator
VA365	A0077	Alternator
VA366	A0202	Alternator
VA367	A0006	Alternator
VA374	A6017	Alternator
VA391	A0005	Alternator
VA392	A0114	Alternator
VS103	S3015	Starter
VS104	S0042	Starter
VS115	S1013	Starter
VS117	S0004	Starter
VS119	S0069	Starter
VS123	S0247	Starter
VS128	S4007	Starter
VS138	S0247	Starter
VS140	S0084	Starter
VS142	S3014	Starter
VS145	S4033	Starter
VS149	S0015	Starter
VS156	S4039	Starter
VS168	S0183	Starter
VS169	S0128	Starter
VS175	S0038	Starter
VS182	S4033	Starter
VS183	S9057	Starter
VS193	S0046	Starter
VS195	S0217	Starter
VS205	S1013	Starter
VS219	S5014	Starter
VS226	S5002	Starter
VS230	S5014	Starter
VS231	S0072	Starter
VS233	S6013	Starter
VS236	S3005	Starter
VS244	S5017	Starter
VS249	S0044	Starter
VS251	S0110	Starter
VS254	S0072	Starter
VS255	S0045	Starter
VS262	S0069	Starter
VS263	S0247	Starter
VS264	S0247	Starter
VS270	S3001	Starter
VS272	S3032	Starter
VS274	S9019	Starter
VS278	S0050	Starter
VS281	S0236	Starter
VS282	S3054	Starter
VS283	S0084	Starter
VS284	S3031	Starter
VS285	S3002	Starter
VS287	S4022	Starter
VS289	S0204	Starter
VS290	S0133	Starter
VS293	S4036(MM)R	Starter
VS302	S4037(MM)R	Starter
VS305	S5012	Starter
VS307	S0016	Starter
VS308	S0029	Starter
VS310	S0144	Starter
VS313	S2015	Starter
VS314	S2017	Starter
VS316	S3009	Starter
VS318	S3004	Starter
VS319	S3004	Starter
VS320	S3015	Starter
VS324	S3011	Starter
VS326	S3001	Starter
VS329	S0062	Starter
VS333	S5016	Starter
VS340	S0033	Starter
VS343	S0014	Starter
VS344	S0055	Starter
VS345	S3004	Starter
YH0601	ARE3044	Regulator
YH1639	ARE3011	Regulator
YH1649	ARE3004	Regulator
YH1652	ARE3004	Regulator
YH1654	ARE3004	Regulator
YH1925	ARE3003	Regulator
YH1933	ARE3003	Regulator
YH2602	ARE3011	Regulator
YH2605	ARE3011	Regulator
YH2606	ARE3011	Regulator
YH2701	ARE3003	Regulator
YH2925	ARE3003	Regulator
YL122	ARE3004	Regulator
YL124	ARE3003	Regulator
YL125	ARE3003	Regulator
YL126	ARE3011	Regulator
YL129	ARE3004	Regulator
YL132	ARE3003	Regulator
YL133	ARE3003	Regulator
YL138	ARE3011	Regulator
YL139	ARE3011	Regulator
YL149	ARE3004	Regulator
YL151	ARE3011	Regulator
YL152	ARE3004	Regulator
YL154	ARE3004	Regulator
YL155	ARE3004	Regulator
YM10616P1C	ARE3023	Regulator
YM1243P1	ARE3007	Regulator
YM1413	ARE3007	Regulator
YM1423P1	ARE3007	Regulator
YM1424P1	ARE3016	Regulator
YM16	ARE3010	Regulator
YM1600	ARE3007	Regulator
YM1610F	ARE3032	Regulator
YM1615P1	ARE3007	Regulator
YM1619P1	ARE3008	Regulator
YM1620	ARE3016	Regulator
YM1627	ARE3028	Regulator
YM1636P1	ARE3028	Regulator
YM1638P	ARE3010	Regulator
YM1652	ARE3004	Regulator
YM1658	ARE3037	Regulator
YM1661VF4	ARE3010	Regulator
YM1666FP5	ARE3026	Regulator

VALEO	AS	PRODUCT
YM1672VFP1	ARE3010	Regulator
YM1675VFP6	ARE3047(VALEO)	Regulator
YM1687VFP1	ARE3010	Regulator
YM1689PF	ARE3039(VALEO)	Regulator
YM1915P1	ARE3007	Regulator
YM1949	ARE3002	Regulator
YM1950	ARE3002	Regulator
YM1952	ARE3002	Regulator
YM1965	ARE3002	Regulator
YM1969	ARE3002	Regulator
YM2612P2	ARE3036	Regulator
YM2618P1	ARE3045(VALEO)	Regulator
YM2660VP2F	ARE3010	Regulator
YM3617P1C	ARE3023	Regulator
YM3617PIC	ARE3023	Regulator
YM3618P1C	ARE3045(VALEO)	Regulator
YM3637	ARE3038	Regulator
YM3637P1C	ARE3038	Regulator
YM3637PIC	ARE3038	Regulator
YM3953	ARE3002	Regulator
YM6555	ARE3002	Regulator
YM6603	ARE3019	Regulator
YM6670VF	ARE3047(VALEO)	Regulator
YM6951	ARE3006	Regulator
YM6952	ARE3002	Regulator
YM6955	ARE3002	Regulator
YM9980	ARE3002	Regulator
YR0636D15	ARE3034(VALEO)	Regulator
YR1607P	ARE3028	Regulator
YR1615PF	ARE3029	Regulator
YR1616VFP1	ARE3010	Regulator
YR3632VFP2	ARE3031	Regulator
YR6604	ARE3027	Regulator
YR6608	ARE3054	Regulator
YR6620PF	ARE3030	Regulator
YR6628PF	ARE3035	Regulator
YR66P	ARE3027	Regulator
YV0913H	ARE3053	Regulator
YV10673H	ARE3024	Regulator
YV1652	ARE3004	Regulator
YV1654	ARE3011	Regulator
YV1667H	ARE3005	Regulator
YV1668H	ARE3009	Regulator
YV1867H	ARE3005	Regulator
YV1868H	ARE3009	Regulator
YV1923	ARE3001	Regulator
YV1924	ARE3003	Regulator
YV1925	ARE3003	Regulator
YV1926T	ARE3014	Regulator
YV1928	ARE3002	Regulator
YV1933	ARE3003	Regulator
YV1965T	ARE3002	Regulator
YV1966T	ARE3002	Regulator
YV1969T	ARE3002	Regulator
YV2605	ARE3011	Regulator
YV2925	ARE3003	Regulator
YV3672	ARE3024	Regulator
YV3970H	ARE3002	Regulator

VALEO	AS	PRODUCT
YV5914H	ARE3050	Regulator
YV9966T	ARE3002	Regulator
ZH3902	ARE3013	Regulator
ZL126	ARE3048	Regulator
ZL128	ARE3048	Regulator
ZL129	ARE3013	Regulator
ZV3729	ARE3013	Regulator
ZV3902H	ARE3013	Regulator
ZV3928	ARE3048	Regulator
ZV3960H	ARE3012	Regulator
ZV3961T	ARE3012	Regulator
for 2542523	ABEC3004	Bearing cover
for CS1415	SD3033	Drive
for D6G33	SS3014	Starter solenoid
for D6RA98	SS3020	Starter solenoid
for JA1798IR	ABEC9002	Bearing cover
for SG15S032	ARC3042	Rectifier

VM	AS	PRODUCT
35532055F	S0189	Starter

VOLKSWAGEN	AS	PRODUCT
02M911023A	S0248	Starter
02M911023C	S0248	Starter
02M911023F	S0248	Starter
02M911023FX	S0248	Starter
02M911023N	S0243	Starter
02M911023P	S0243	Starter
02M911023R	S0248	Starter
02M911024	S0243	Starter
02M911024A	S0243	Starter

VOLVO	AS	PRODUCT
1089861	A0108	Alternator
1089862	A0010	Alternator
1096757	A3059	Alternator
1096758	A0008	Alternator
11030906	S0216	Starter
11031126	S0063	Starter
11170011	A3059	Alternator
11170134	A0138	Alternator
11170321	A0138	Alternator
1257939	S0043	Starter
1328392	S0043	Starter
1357199	S0055	Starter
1363451	S0059	Starter
1363496	A0104	Alternator
1363511	A0104	Alternator
1367094	SD2016	Drive
1397424	SF0014	Starter field coil
1398327	A0104	Alternator
1505107	A0099	Alternator
1505307	A0099	Alternator
1509425	A0055	Alternator
1547049	S0021	Starter
1578139	A0055	Alternator
1578140	A0099	Alternator
1578938	A0055	Alternator
1607361	A0100	Alternator
1607362	A0009	Alternator
1621048	A0010	Alternator
1624889	A0100	Alternator
1676822	S0107	Starter
1698764	ARE0032	Regulator

VOLVO	AS	PRODUCT
20409228	A0123	Alternator
20409240	A0063	Alternator
20430564	S5028	Starter
20451445	S0135	Starter
20466315	A0138	Alternator
20466317	A0139	Alternator
20523391	ARE0054	Regulator
20536466	S0135	Starter
20553711	S0063	Starter
20572417	S5028	Starter
20802191	ARE0042	Regulator
20849349	A0138	Alternator
2084935	A0063	Alternator
20849350	A0138	Alternator
20849351	A0139	Alternator
20849352	A0139	Alternator
240504	S0007	Starter
24437136	S0088	Starter
30658567	S0155	Starter
30667067	A6010	Alternator
30667068	A6018	Alternator
30667069	A6019	Alternator
30667071	A6011	Alternator
30667102	S0096	Starter
30667494	S9033	Starter
30667610	AFP0059	FW pulley
30667682	AFP0052	FW pulley
30667874	S9033	Starter
30667980	AFP0067	FW pulley
30724473	S0155	Starter
30735759	IC9003	Ignition Coil
30755494	A6011	Alternator
30782052	S0155	Starter
30795422	A6010	Alternator
30795423	A6018	Alternator
308043	S0063	Starter
30808465	S3030	Starter
3090430	ABR0002	Bracket
3091573	ABR0005	Bracket
31288275	S0096	Starter
3173821	A3059	Alternator
33431263	ARC3001	Rectifier
3412455	S3015	Starter
3430012	S3015	Starter
3523301	S0055	Starter
3581774	S3042	Starter
36000039	S9063	Starter
36000221	S9033	Starter
36000237	S0155	Starter
36000598	A6010	Alternator
36002496	S9063	Starter
36002761	S0096	Starter
3803118	S3042	Starter
3803200	S3042	Starter
3803386	S3042	Starter
3803639	A0138	Alternator
3803645	A0049	Alternator
3803646	S0155	Starter
3963143	A3059	Alternator
3964839	S0135	Starter
3966428	A3059	Alternator
3978044	S0107	Starter

VOLVO	AS	PRODUCT
3978710	S0108	Starter
3986428	A3059	Alternator
3986429	A0008	Alternator
420780	S0063	Starter
465482	S9054	Starter
465603	S9054	Starter
465604	S0107	Starter
465929	S0216	Starter
465930	S0063	Starter
466772	S0107	Starter
469414	S0007	Starter
5001677	A0099	Alternator
5001679	A0099	Alternator
5001680	S0063	Starter
5001683	S0007	Starter
5001782	A0055	Alternator
5001784	S0107	Starter
5001835	A0055	Alternator
5001836	S9054	Starter
5002050	S0043	Starter
5002476	S0183	Starter
5002635	A3011	Alternator
5002691	A3050	Alternator
5002781	A3044	Alternator
5003009	S0107	Starter
5003027	S0216	Starter
5003028	S0063	Starter
5003089	A0100	Alternator
5003349	A0108	Alternator
5003398	A0010	Alternator
5003448	A0108	Alternator
5003564	S0055	Starter
5003665	A0104	Alternator
5003708	S0043	Starter
5003804	A0104	Alternator
6205473	A0014	Alternator
6226486	S9052	Starter
6779261	A0108	Alternator
6779713	A0055	Alternator
6886493	A0099	Alternator
8111001	A0060	Alternator
8111048	A0177	Alternator
8111119	A0036	Alternator
8111122	A0036	Alternator
8111302	S0059	Starter
8111537	A3003	Alternator
8111569	A4008	Alternator
8111572	S3052	Starter
8111635	S3030	Starter
8111693	S3011	Starter
8111701	S3004	Starter
8111712	A3025	Alternator
8111838	A1014	Alternator
8111839	A1014	Alternator
8111840	S3007	Starter
8111888	A3089	Alternator
8111906	A3092	Alternator
8111920	A3028	Alternator
8111921	A3079	Alternator
8111944	A3090	Alternator
8111945	A3089	Alternator
8112614	A3059	Alternator
8113165	S0135	Starter
8113258	A3059	Alternator
8113860	S0107	Starter
8113908	A0099	Alternator
8113909	A0100	Alternator
8113910	A0055	Alternator
8113911	A0108	Alternator
8113912	A0010	Alternator
8113918	S0135	Starter
8144401	A3059	Alternator
8156816	A3059	Alternator
8156817	A0008	Alternator
8192262	S0107	Starter
8192965	S0108	Starter
8251071	A0061	Alternator
8251551	S0059	Starter
8251641	A3037	Alternator
8251648	A3073	Alternator
8251655	A0061	Alternator
8252875	S0223(BOSCH)	Starter
8252889	S3024	Starter
8253504	S3008	Starter
8253507	A0044	Alternator
8253632	A0145	Alternator
8253634	S3021	Starter
8253785	A3037	Alternator
8253786	S3058R	Starter
8253873	S3008	Starter
8253975	A3063	Alternator
8253980	A3035	Alternator
85000087	S5028	Starter
85000186	S0135	Starter
85000221	A0108	Alternator
85000257	A0138	Alternator
85000446	S0107	Starter
85000447	S0108	Starter
85000626	A0138	Alternator
85000628	A0139	Alternator
85000629	A0139	Alternator
85000715	A0008	Alternator
85000716	A0010	Alternator
85000746	S5028	Starter
85103855	SD0122	Drive
859252	S3042	Starter
8601699	A0061	Alternator
8601841	A0061	Alternator
8602083	S3001	Starter
8602084	S0059	Starter
8602085	S0059	Starter
8602097	A3089	Alternator
8602101	A3031	Alternator
8602102	S3030	Starter
8602159	A3091	Alternator
8602185	A3089	Alternator
8602274	S3059	Starter
8602275	A0049	Alternator
8602276	A0061	Alternator
8602277	A0060	Alternator
8602279	A3037	Alternator
8602343	A0049	Alternator
8602355	S0155	Starter
8602360	S0154	Starter
8602556	A3073	Alternator
8602629	A0049	Alternator
8602710	A0049	Alternator
8602712	A0049	Alternator
8602713	A0146	Alternator
8602714	A0146	Alternator
8602806	A3037	Alternator
8602818	S0155	Starter
8603182	A6010	Alternator
8603292	S9030	Starter
8603377	S0096	Starter
8603409	S9033	Starter
8603539	S0155	Starter
8603689	S9030	Starter
8603690	S9036	Starter
8622786	A0049	Alternator
8637847	A0049	Alternator
8637848	A0049	Alternator
8637849	A0146	Alternator
8641982	AFP3004	FW pulley
8651665	A0146	Alternator
8666579	A6010	Alternator
8666581	A6019	Alternator
8676489	A0049	Alternator
8676496	A0049	Alternator
8676497	AFP0007	FW pulley
8676498	A0049	Alternator
8676499	A0146	Alternator
8688170	A6011	Alternator
8697576	S9033	Starter
8697650	S9063	Starter
872258	A1014	Alternator
873348	A1014	Alternator
874468	S0172	Starter
9031081	A3048	Alternator
9031146	A3004	Alternator
9031302	S3015	Starter
9031303	S3001	Starter
9031311	A3004	Alternator
9128421	S0059	Starter
9162617	S0059	Starter
9162618	S0059	Starter
9162927	A0177	Alternator
9404328	AFP0022	FW pulley
9442130	A0036	Alternator
9442841	A0060	Alternator
9442905	A0177	Alternator
9447866	A0177	Alternator
9459038	A0060	Alternator
9459077	A0061	Alternator
9459092	A0061	Alternator
9459093	A0036	Alternator
9459468	S0154	Starter
9459747	AFP0007	FW pulley
9472908	A0061	Alternator
9472909	AFP6004	FW pulley
9489312	A0049	Alternator
9496882	S0155	Starter
9521761	A0008	Alternator

VW	AS	PRODUCT
0036905100A	IC9002	Ignition Coil
0036905715E	IC9002	Ignition Coil

VW	AS	PRODUCT
004028149	IC9004	Ignition Coil
00A903025	A0172	Alternator
00A903025A	A0173	Alternator
012911023	S0240	Starter
020911023	S0062	Starter
020911023A	S0062	Starter
020911023AX	S0062	Starter
020911023D	S3041	Starter
020911023DX	S3041	Starter
020911023F	S0027	Starter
020911023J	S0062	Starter
020911023L	S0062	Starter
020911023M	S0062	Starter
020911023MX	S0062	Starter
020911023N	S0062	Starter
020911023P	S3041	Starter
020911023PX	S3041	Starter
020911023R	S3041	Starter
020911023T	S0027	Starter
021903017	A0131	Alternator
021903017A	A0077	Alternator
021903020D	A0069	Alternator
021903020DX	A0069	Alternator
021903023J	A0131	Alternator
021903023L	A0048	Alternator
021903023M	A0131	Alternator
021903023Q	A0078	Alternator
021903025B	A0048	Alternator
021903025BX	A0119	Alternator
021903025F	A0077	Alternator
021903025G	A0117	Alternator
021903025K	A0059	Alternator
021903025N	A0129	Alternator
021903028L	A0128	Alternator
021903119H	AFP0032	FW pulley
021903119K	AFP0032	FW pulley
021911209	SBH0008	S. Brush holder
022903119B	AFP0009	FW pulley
022903119C	AFP0010	FW pulley
023903023	A0131	Alternator
023903023B	A0131	Alternator
023903025R	A0048	Alternator
025903023	A0090	Alternator
025903023B	A0090	Alternator
025903023D	A0094	Alternator
025903023E	A0094	Alternator
025911023	S0077	Starter
025911023A	S0077	Starter
025911023AX	S0077	Starter
026903015	A0028	Alternator
026903015A	A0028	Alternator
026903015B	A0028	Alternator
026903015C	A0028	Alternator
026903015D	A0028	Alternator
026903015E	A0028	Alternator
026903015EX	A0028	Alternator
026903015F	A0094	Alternator
026903017A	A0028	Alternator
026903017AX	A0028	Alternator
026903017B	A0094	Alternator
026903017BX	A0094	Alternator
026903023	A0028	Alternator
026903023A	A0028	Alternator
026903023B	A0028	Alternator
026911023	S0050	Starter
026911023B	S0050	Starter
026911023BX	S0050	Starter
026911023X	S0050	Starter
028309027G	A0151	Alternator
028903018	A0118	Alternator
028903018A	A0080	Alternator
028903018AX	A0080	Alternator
028903018B	A0118	Alternator
028903018BX	A0118	Alternator
028903018C	A0048	Alternator
028903018CX	A0048	Alternator
028903018E	A0151	Alternator
028903018EX	A0151	Alternator
028903018F	A0078	Alternator
028903018FX	A0078	Alternator
028903018G	A0041	Alternator
028903018X	A0131	Alternator
028903023E	A0078	Alternator
028903023EX	A0078	Alternator
028903025C	A0078	Alternator
028903025CX	A0078	Alternator
028903025E	A0078	Alternator
028903025EX	A0078	Alternator
028903025F	A0151	Alternator
028903025FX	A0151	Alternator
028903025G	A0202	Alternator
028903025GX	A0202	Alternator
028903025H	A0131	Alternator
028903025HX	A0131	Alternator
028903025P	A0006	Alternator
028903025PX	A0006	Alternator
028903025Q	A0077	Alternator
028903025QX	A0077	Alternator
028903025R	A0048	Alternator
028903025S	A0118	Alternator
028903025SX	A0118	Alternator
028903026E	A0019	Alternator
028903026H	A0059	Alternator
028903027B	A0077	Alternator
028903027C	A0131	Alternator
028903027D	A0118	Alternator
028903027G	A0151	Alternator
028903027K	A0131	Alternator
028903027L	A0079	Alternator
028903027M	A0176	Alternator
028903027N	A0019	Alternator
028903027P	A0186	Alternator
028903027S	A0041	Alternator
028903027T	A0041	Alternator
028903028A	A0151	Alternator
028903028B	A0118	Alternator
028903028D	A0027	Alternator
028903028DX	A0027	Alternator
028903028E	A0059	Alternator
028903028F	A0151	Alternator
028903028G	A0079	Alternator
028903028H	A0131	Alternator
028903028L	A0128	Alternator
028903028R	A0130	Alternator
028903029B	A0046	Alternator
028903029E	A0046	Alternator
028903029G	A0059	Alternator
028903029M	A3083	Alternator
028903029Q	A3033	Alternator
028903029R	A3033	Alternator
028903030	A0059	Alternator
028903030A	A0059	Alternator
028903031	A0046	Alternator
028903031A	A0046	Alternator
028903031X	A0046	Alternator
028903119AA	AFP0005	FW pulley
028903119AC	AFP0009	FW pulley
028903119AJ	AFP0024	FW pulley
028903119AM	AFP0010	FW pulley
028903119S	AFP0001	FW pulley
028903119T	AFP0006	FW pulley
028903165	AFP0006	FW pulley
028903803F	ARE3002	Regulator
028911028L	A0128	Alternator
02A911023	S0190R	Starter
02A911023A	S0190R	Starter
02A911023AX	S0190R	Starter
02A911023C	S0146	Starter
02A911023E	S0083	Starter
02A911023EX	S0083	Starter
02A911023F	S0033	Starter
02A911023FX	S0033	Starter
02A911023H	S0146	Starter
02A911023HX	S0146	Starter
02A911023J	S0025	Starter
02A911023JX	S3025	Starter
02A911023L	S0048	Starter
02A911023Q	S0146	Starter
02A911023R	S0025	Starter
02A911023S	S0146	Starter
02A911023T	S0033	Starter
02A911023TX	S0033	Starter
02A911023X	S0190R	Starter
02A911024	S0025	Starter
02A911024B	S0025	Starter
02A911024D	S0025	Starter
02A911024E	S0146	Starter
02A911024G	S0025	Starter
02A911024X	S0025	Starter
02B911023A	S0142	Starter
02B911023AX	S0142	Starter
02B911023B	S0131	Starter
02B911023BX	S0131	Starter
02B911023D	S3026	Starter
02B911023DX	S3026	Starter
02B911023E	S0212	Starter
02B911023EX	S0212	Starter
02B911023J	S3026	Starter
02B911023L	S3026	Starter
02B911023M	S0212	Starter
02B911023N	S3026	Starter
02M911023	S0119	Starter
02M911023G	S3037	Starter
02M911023GX	S3037	Starter
02M911023M	S3037	Starter
02M911023Q	S0214	Starter

VW	AS	PRODUCT
02M911023S	S0120	Starter
02M911255B	SBR0020	Starter bracket
02T900023MX	S3043	Starter
02T911023B	S0048	Starter
02T911023C	S0224	Starter
02T911023E	S0032	Starter
02T911023H	S0224	Starter
02T911023M	S3043	Starter
02T911023R	S3044	Starter
02T911023S	S3044	Starter
02T911023T	S3043	Starter
02T911023TX	S3043	Starter
02T911024	S0140	Starter
02T911024A	S3044	Starter
02Z911023C	S3044	Starter
02Z911023E	S3055	Starter
02Z911023F	S0090	Starter
02Z911023G	S3055	Starter
02Z911023H	S0090	Starter
030903023B	A0202	Alternator
030903023BX	A0202	Alternator
030903023C	A0006	Alternator
030903023E	A0202	Alternator
030903023EX	A0202	Alternator
030903023F	A0006	Alternator
030903023FX	A0006	Alternator
030903023J	A0027	Alternator
030903023JX	A0027	Alternator
030903023L	A0125	Alternator
030903023M	A0037	Alternator
030903023PA	A0006	Alternator
031903017C	A0092	Alternator
031903023B	A0092	Alternator
031903023C	A0092	Alternator
031911023	S0187	Starter
031911023A	S0187	Starter
031911023AX	S0187	Starter
031911023X	S0187	Starter
032905106	IM0002	Ignition Module
032905106B	IM0002	Ignition Module
034903015	A0105	Alternator
034903015C	A0091	Alternator
034903015D	A0094	Alternator
034903015F	A0111	Alternator
034903015H	A0094	Alternator
034903015J	A0090	Alternator
034903015K	A0094	Alternator
034903015M	A0094	Alternator
034903016	A0111	Alternator
034903016E	A0094	Alternator
034903016H	A0111	Alternator
034903017A	A0105	Alternator
034903017B	A0111	Alternator
034903017BX	A0111	Alternator
034911023	S0015	Starter
034911023A	S0015	Starter
034911023X	S0015	Starter
035903015D	A0103	Alternator
035903015G	A0103	Alternator
035903015P	A0103	Alternator
035903015Q	A0103	Alternator
035903015T	A0091	Alternator
035903016C	A0103	Alternator
035903017	A0103	Alternator
035903017A	A0093	Alternator
035903017AX	A0093	Alternator
035903017X	A0103	Alternator
035903023B	A0094	Alternator
035903023D	A0094	Alternator
035911023D	S0015	Starter
035911023L	S0015	Starter
035911023LX	S0015	Starter
035911023M	S0015	Starter
035911023N	S0015	Starter
035911023NX	S0050	Starter
035911023O	S0015	Starter
035911023Q	S0015	Starter
035911023QX	S0015	Starter
036903015B	A0094	Alternator
036903017G	A0086	Alternator
036903017GX	A0086	Alternator
036903024E	A0039	Alternator
036903024L	A0188	Alternator
036903024M	A0039	Alternator
036903028A	A0027	Alternator
036903359J	ARC3020	Rectifier
036905100A	IC9002	Ignition Coil
036905100B	IC9002	Ignition Coil
036905100C	IC9002	Ignition Coil
036905100D	IC9002	Ignition Coil
036905101C	IC9002	Ignition Coil
036905102D	IC9002	Ignition Coil
036905103E	IC9002	Ignition Coil
036905715	IC9002	Ignition Coil
036905715A	IC9002	Ignition Coil
036905715C	IC9002	Ignition Coil
036905715E	IC9002	Ignition Coil
036905715F	IC9002	Ignition Coil
036911023Q	S4016	Starter
036911023QX	S4016	Starter
036911023S	S0104	Starter
036911023SX	S0104	Starter
036911025B	S0104	Starter
036911209A	SBH0008	S. Brush holder
037903023E	A0077	Alternator
037903023F	A0048	Alternator
037903023G	A0077	Alternator
037903023GX	A0077	Alternator
037903023P	A0028	Alternator
037903023Q	A0131	Alternator
037903023QX	A0131	Alternator
037903025C	A0080	Alternator
037903025E	A0125	Alternator
037903025F	A0027	Alternator
037903025H	A0188	Alternator
037903025K	A0056	Alternator
037903025M	A0042	Alternator
037903025P	A0188	Alternator
037903025R	A0056	Alternator
037903025T	A0042	Alternator
037903026C	A0027	Alternator
037911023	S0072	Starter
038903018	A0038	Alternator
038903018A	A0042	Alternator
038903018AX	A0027	Alternator
038903018B	A0189	Alternator
038903018C	A0188	Alternator
038903018CX	A0188	Alternator
038903018E	A0050	Alternator
038903018EX	A0050	Alternator
038903018F	A3108	Alternator
038903018P	A0127	Alternator
038903018Q	A0059	Alternator
038903018R	A0042	Alternator
038903018X	A0037	Alternator
038903023L	A0127	Alternator
038903023R	A0127	Alternator
038903023S	A0059	Alternator
038903023T	A0038	Alternator
038903024A	A0127	Alternator
038903024D	A0127	Alternator
038903024E	A0127	Alternator
038903024F	A0059	Alternator
038903024G	A0059	Alternator
038903119	AFP0004	FW pulley
038903119A	AFP0010	FW pulley
038903119AB	AFP0014	FW pulley
038903119L	AFP0017	FW pulley
038903119M	AFP0009	FW pulley
038903119P	AFP0011	FW pulley
038903119Q	AFP0014	FW pulley
038903119T	AFP0010	FW pulley
038903165	AFP0004	FW pulley
038903213	AR0013	Rotor
038903351	AS0018	Stator
038903351N	AS0020	Stator
038903803C	ARE0010	Regulator
03C903023	A0181	Alternator
03C903023B	A0181	Alternator
03C903023D	A0181	Alternator
03C903119A	AFP0047	FW pulley
03C903119C	AFP0047	FW pulley
03D903025D	A3102	Alternator
03D903025E	A3101	Alternator
03D903025H	A3102	Alternator
03D903025HX	A3102	Alternator
03D903025J	A3101	Alternator
03D903119A	AFP3006	FW pulley
03G903119B	AFP0033	FW pulley
03G911023A	S0175	Starter
03G911023AX	S0175	Starter
045903023A	A0059	Alternator
045903026C	A0037	Alternator
045903119	AFP0033	FW pulley
045903119A	AFP0033	FW pulley
046903015D	A0111	Alternator
046911023B	S0047	Starter
046911023BX	S0047	Starter
047903015H	A0042	Alternator
047903015J	A9015	Alternator
047903015M	A9034	Alternator
047903015Q	A0158	Alternator
047903017	A0158	Alternator
047905115	IC9004	Ignition Coil
047911023C	S9011	Starter
047911023G	S9011	Starter

VW	AS	PRODUCT
049903015H	A0203	Alternator
049903023M	A0103	Alternator
049903027	A0094	Alternator
049903027A	A0094	Alternator
049911023G	S0050	Starter
049911023GX	S0050	Starter
049911023H	S0050	Starter
049911255B	SBR0010	Starter bracket
050903015B	A0096	Alternator
050903015BX	A0096	Alternator
050903015G	A0095	Alternator
050903015J	A0095	Alternator
050903017A	A0131	Alternator
050903022J	A0095	Alternator
050903023J	A0095	Alternator
051903015D	A0111	Alternator
053903015B	A0096	Alternator
053903015D	A0095	Alternator
053903015E	A0095	Alternator
053911023A	S0054	Starter
053911023AX	S0054	Starter
053911023B	S0054	Starter
053911023BX	S0054	Starter
054903015A	A0111	Alternator
054903015J	A0111	Alternator
054903015L	A0111	Alternator
055911023E	S0072	Starter
055911023F	S0072	Starter
055911023FX	S0072	Starter
055911023G	S0057	Starter
055911023GX	S0057	Starter
055911023H	S0072	Starter
055911023HX	S0072	Starter
055911023J	S0072	Starter
055911023JX	S0072	Starter
055911023K	S0072	Starter
055911023KX	S0072	Starter
055911023L	S0072	Starter
055911023M	S0072	Starter
055911023MX	S0072	Starter
055911023R	S0072	Starter
058903016A	A3081	Alternator
058903016B	A3081	Alternator
058903016BX	A3081	Alternator
058903016E	A3081	Alternator
058903018A	A3081	Alternator
058903018B	A3081	Alternator
058903119C	AFP0019	FW pulley
058911023B	S0054	Starter
058911023BX	S0054	Starter
058911023F	S0095	Starter
059903015G	A0045	Alternator
059903015GX	A0045	Alternator
059903015J	A0050	Alternator
059903016D	A3080	Alternator
059911023A	S0191	Starter
059911023H	S0176	Starter
059911023P	S0177	Starter
059911023Q	S0177	Starter
059911023R	S0177	Starter
059911023S	S0213	Starter
059911023SX	S0213	Starter
059911024	S0177	Starter
059911024F	S0191	Starter
059911024G	S0177	Starter
059911024JX	S0213	Starter
062911023	S0153	Starter
062911023X	S0153	Starter
068903017	A0098	Alternator
068903017E	A0103	Alternator
068903017EX	A0103	Alternator
068903017M	A0141	Alternator
068903017MX	A0141	Alternator
068903017P	A0093	Alternator
068903017PX	A0093	Alternator
068903017Q	A0106	Alternator
068903017QX	A0106	Alternator
068903017X	A0098	Alternator
068903018B	A0093	Alternator
068903018BX	A0093	Alternator
068903018P	A0093	Alternator
068903023T	A0093	Alternator
068903025C	A0098	Alternator
068903025H	A0103	Alternator
068903027P	A0098	Alternator
068903027PX	A0098	Alternator
068903029A	A0093	Alternator
068903029D	A0093	Alternator
068903029F	A0093	Alternator
068903029G	A0093	Alternator
068903029K	A0106	Alternator
068903029M	A0093	Alternator
068903029N	A0093	Alternator
068903029P	A0093	Alternator
068903031C	A0086	Alternator
068903031D	A0141	Alternator
068903031L	A0141	Alternator
068903031R	A0106	Alternator
068903031RX	A0106	Alternator
068903031S	A0086	Alternator
068903031SX	A0086	Alternator
068911023G	S0045	Starter
068911023GX	S0045	Starter
068911023L	S0038	Starter
068911023LX	S0038	Starter
068911023M	S0014	Starter
068911023MX	S0014	Starter
068911023PX	S0038	Starter
068911023S	S0039	Starter
068911023SX	S0039	Starter
068911024B	S0039	Starter
068911024BX	S0039	Starter
068911024C	S0039	Starter
068911024E	S0039	Starter
068911024F	S0039	Starter
068911024G	S0039	Starter
068911024H	S0234	Starter
068911024K	S0045	Starter
068911024T	S3066	Starter
068911335G	SD0140	Drive
069903017A	A0093	Alternator
069903017AX	A0093	Alternator
069903023C	A0103	Alternator
069903023D	A0093	Alternator
069903023G	A0093	Alternator
069903023H	A0093	Alternator
069911023B	S0043	Starter
069911023BX	S0043	Starter
069911023C	S0047	Starter
069911023CX	S0047	Starter
069911023D	S0047	Starter
069911023DX	S0047	Starter
069911023E	S0049	Starter
069911023F	S0066	Starter
069911023G	S0087	Starter
069911023H	S0169	Starter
069911023J	S0192	Starter
069911023K	S0169	Starter
069911023L	S0049	Starter
069911023M	S0192	Starter
069911287D	SS0039	Starter solenoid
06A903023	A0027	Alternator
06A903026	A0027	Alternator
06A903026A	A0027	Alternator
06A903026AX	A0027	Alternator
06B603016Q	A0076	Alternator
06B903016A	A0050	Alternator
06B903016AC	A0076	Alternator
06B903016AD	A3109	Alternator
06B903016AE	A0195	Alternator
06B903016B	A0143	Alternator
06B903016D	A0050	Alternator
06B903016E	A0143	Alternator
06B903016EX	A0143	Alternator
06B903016F	A3054	Alternator
06B903016G	A3054	Alternator
06B903016P	A0195	Alternator
06B903016Q	A0076	Alternator
06B903016S	A0195	Alternator
06B903119A	AFP3014	FW pulley
06B903119B	AFP0023	FW pulley
06B911023	S0054	Starter
06B911023A	S0171	Starter
06B911023X	S0054	Starter
06C903016	A0045	Alternator
06C903016A	A0045	Alternator
06D903016	A0076	Alternator
06D911023	S3038	Starter
06D911023A	S3038	Starter
06E903119E	AFP3023	FW pulley
06E903119P	AFP3023	FW pulley
06E903119Q	AFP3025	FW pulley
06F903023A	A0190	Alternator
06F903023B	A0180	Alternator
06F903023C	A0190	Alternator
06F903023D	A3097	Alternator
06F903023E	A3097	Alternator
06F903023EX	A3097	Alternator
06F903023F	A0190	Alternator
06F903023G	A0180	Alternator
06F903023H	A0190	Alternator
06F903023J	A0190	Alternator
070903024A	A0170	Alternator
070903024F	A0170	Alternator
070903201C	AFP0025	FW pulley
071903016C	A0050	Alternator

VW	AS	PRODUCT
071903016D	A3054	Alternator
071903016E	A3054	Alternator
071903016G	A3081	Alternator
071903119B	AFP0017	FW pulley
071903165	AFP0017	FW pulley
073903023	A0094	Alternator
073903023A	A0094	Alternator
074903023A	A0105	Alternator
074903023B	A0105	Alternator
074903023C	A0105	Alternator
074903023Q	A0077	Alternator
074903023R	A0048	Alternator
074903025A	A0106	Alternator
074903025C	A0105	Alternator
074903025J	A0036	Alternator
074903025K	A0040	Alternator
074903025M	A0038	Alternator
074903025N	A0189	Alternator
074903025Q	A0036	Alternator
074903025R	A0036	Alternator
074903026	A0127	Alternator
074903119E	AFP0032	FW pulley
075903023	A0093	Alternator
075903023A	A0093	Alternator
076903023I	A0090	Alternator
076903023J	A0028	Alternator
076903023M	A0098	Alternator
076911023A	S0193	Starter
077903015	A0111	Alternator
077903015C	A0111	Alternator
077903015G	A0111	Alternator
077911023E	S0233	Starter
078903015	A3064	Alternator
078903015B	A3064	Alternator
078903015D	A3064	Alternator
078903015DX	A3064	Alternator
078903016A	A3064	Alternator
078903016E	A0050	Alternator
078903016F	A0045	Alternator
078903016G	A0050	Alternator
078903016H	A0045	Alternator
078903016HX	A3108	Alternator
078903016R	A0160	Alternator
078903016S	A0160	Alternator
078903017B	A3064	Alternator
078903119G	AFP0040	FW pulley
078903803A	ARE3002	Regulator
078903803B	ARE3002	Regulator
078911023	S0030	Starter
078911023A	S0030	Starter
078911023X	S0030	Starter
078911287	SS0036	Starter solenoid
07K903025A	A0190	Alternator
085911023A	S0094	Starter
085911023AX	S0094	Starter
085911023B	S4016	Starter
085911023BX	S4016	Starter
085911023E	S4016	Starter
085911023F	S0095	Starter
085911023J	S4016	Starter
085911023JX	S4016	Starter
085911023K	S0094	Starter

VW	AS	PRODUCT
085911023L	S0094	Starter
085911023M	S0094	Starter
085911287	SS0017	Starter solenoid
091911023A	S0077	Starter
091911023B	S0077	Starter
091911023BX	S0077	Starter
0AH911023B	S0229	Starter
0AH911023BX	S0229	Starter
111911023BT	S0046	Starter
111911023C	S0046	Starter
111911023D	S0046	Starter
176911023	S0045	Starter
1HS911023B	S0062	Starter
211911023	S0046	Starter
2TB903803A	ARE0042	Regulator
311911023B	S0046	Starter
311911023C	S0046	Starter
311911023D	S0046	Starter
311911023DX	S0046	Starter
357905104	IC9004	Ignition Coil
36905715	IC9002	Ignition Coil
377903015	AFP0024	FW pulley
441.04009-219.6	S9058	Starter
6N0905104	IC9004	Ignition Coil
6NO905104	IC9004	Ignition Coil
6U0911023A	S0125	Starter
6U0911023AX	S0125	Starter
6U0911023B	S9010	Starter
7M5903028	A3071	Alternator
7M590302B	A3071	Alternator
867905104	IC9004	Ignition Coil
867905104A	IC9004	Ignition Coil
867905352	IM0003	Ignition Module

WAGNER	AS	PRODUCT
W04X-05	ARD9039	Diode
W04X-37	ARD9018	Diode
W04X-38	ARD9009	Diode
W04X-39	ARD9019	Diode
W04X-40	ARD9010	Diode
W04X-43	ARD9017	Diode
W04X-44	ARD9008	Diode

WAI	AS	PRODUCT
10-1046-4	ABE9013	Bearing
10-1046-4W	ABE9013	Bearing
10-1050-4	ABE9015	Bearing
10-1050-4W	ABE9015	Bearing
10-1569-4	ABE9030	Bearing
10-2021-4	ABE9016	Bearing
10-2021-4W	ABE9016	Bearing
10-2022-4	ABE9031	Bearing
10-2022-4W	ABE9031	Bearing
10-3021-4	ABE9023	Bearing
10-3021-4W	ABE9023	Bearing
10-3022-4	ABE9017	Bearing
10-3022-4W	ABE9017	Bearing
10-3031-4	ABE9028	Bearing
10-3031-4W	ABE9028	Bearing
10-3041-4	ABE9026	Bearing
10-3041-4W	ABE9026	Bearing
10-3042-4	ABE9024	Bearing
10-3042-4W	ABE9024	Bearing

WAI	AS	PRODUCT
10-3043-4	ABE9018	Bearing
10-62304-4	ABE9025	Bearing
10-800-4	ABE9027	Bearing
10-800-4W	ABE9027	Bearing
10-874-4	ABE9011	Bearing
10-874W	ABE9011	Bearing
10-879-4	ABE9012	Bearing
10-879-4W	ABE9012	Bearing
10-885-4	ABE9014	Bearing
10-885-4W	ABE9014	Bearing
10-900-4	ABE9032	Bearing
24-1283	AFP1002	FW pulley
24-2279	AFP9003	FW pulley
24-81107	AFP2001	FW pulley
24-82275	AFP6004	FW pulley
24-82276	AFP6006	FW pulley
24-82291-4	AFP6014	FW pulley
24-91103	AFP0016	FW pulley
24-91104	AFP0007	FW pulley
24-91105	AFP0005	FW pulley
24-91106	AFP0006	FW pulley
24-91107	AFP0004	FW pulley
24-91252	AFP0002	FW pulley
24-91253	AFP0011	FW pulley
24-91254	AFP0003	FW pulley
24-91256	AFP0009	FW pulley
24-91266	AFP0013	FW pulley
24-94252	AFP3008	FW pulley
27-136	AS1001	Stator
27-8106-1	AS2001	Stator
27-8107	AS2003	Stator
27-9103	AS0011	Stator
27-9104	AS0011	Stator
27-9407	AS3006	Stator
27-9419	AS3006	Stator
28-136	AR1001	Rotor
28-2855-1	ASL9011	Slip ring
28-2855-2	ASL9011	Slip ring
28-2855-3	ASL9011	Slip ring
28-2857	ASL9018	Slip ring
28-8102	AR2002	Rotor
28-82853	ASL9009	Slip ring
28-91850	ASL9006	Slip ring
28-91852	ASL9008	Slip ring
28-92852	ASL9004	Slip ring
28-9417	AR3008	Rotor
28-94850	ASL9001	Slip ring
28-94851	ASL9003	Slip ring
28-94865	ASL9007	Slip ring
31-116	ARC1018	Rectifier
31-120-2	ARC1006	Rectifier
31-124	ARC1009	Rectifier
31-131	ARC1002	Rectifier
31-133	ARC1006	Rectifier
31-133-1	ARC1006	Rectifier
31-133-2	ARC1006	Rectifier
31-133-HD	ARC1006	Rectifier
31-134	ARC1004	Rectifier
31-200-15	ARC9001	Rectifier
31-202	ARC9007	Rectifier
31-202-1	ARC9007	Rectifier
31-202-2	ARC9007	Rectifier

WAI	AS	PRODUCT
31-202-3	ARC9007	Rectifier
31-202-4	ARC9007	Rectifier
31-202-5	ARC9007	Rectifier
31-202-6	ARC9007	Rectifier
31-202-7	ARC9007	Rectifier
31-202-8	ARC9007	Rectifier
31-206	ARC9009	Rectifier
31-208	ARC9011	Rectifier
31-208-1	ARC9011	Rectifier
31-210	ARC9012	Rectifier
31-212	ARC9015	Rectifier
31-213	ARC9013	Rectifier
31-215	ARC9009	Rectifier
31-216	ARC9014	Rectifier
31-8105-3	ARC2002	Rectifier
31-8110	ARC2026	Rectifier
31-8111	ARC2007	Rectifier
31-8124	ARE2019	Regulator
31-8125	ARC2019	Rectifier
31-8132	ARC2031	Rectifier
31-8133	ARC2009	Rectifier
31-8133-1	ARC2009	Rectifier
31-8204	ARC6011	Rectifier
31-8207	ARC6010	Rectifier
31-8208	ARC6011	Rectifier
31-8208-1	ARC6011	Rectifier
31-8210	ARC6010	Rectifier
31-8213	ARC6014	Rectifier
31-8214	ARC6014	Rectifier
31-8217	ARC6006	Rectifier
31-8218	ARC6018	Rectifier
31-8221	ARC6007	Rectifier
31-8222	ARC6018	Rectifier
31-8313	ARC5016	Rectifier
31-8315	ARC5018	Rectifier
31-8317	ARC5001	Rectifier
31-8318	ARC5021	Rectifier
31-8320	ARC5008	Rectifier
31-8321	ARC5001	Rectifier
31-8322	ARC5007	Rectifier
31-8324	ARC5054	Rectifier
31-8327	ARC5023	Rectifier
31-8328	ARC5029	Rectifier
31-8338	ARC5039	Rectifier
31-8347	ARC5027	Rectifier
31-8349	ARC5002	Rectifier
31-8350	ARC5032	Rectifier
31-8355	ARC5045	Rectifier
31-8358	ARC5059	Rectifier
31-8360	ARC5010	Rectifier
31-8361	ARC5057	Rectifier
31-8364	ARC5043	Rectifier
31-8366	ARC5046	Rectifier
31-8371	ARC5010	Rectifier
31-8381	ARC5048	Rectifier
31-8382	ARC5028	Rectifier
31-8601	ARC9018	Rectifier
31-9108	ARC0002	Rectifier
31-9110	ARC0015	Rectifier
31-9114	ARC0005	Rectifier
31-9122	ARC0031	Rectifier
31-9124	ARC0029	Rectifier
31-9126	ARC0041	Rectifier
31-9129	ARC0056	Rectifier
31-9133	ARC0023	Rectifier
31-9134	ARC0028	Rectifier
31-9146	ARC0015	Rectifier
31-9148	ARC0065	Rectifier
31-9151	ARC0045	Rectifier
31-9302	ARC4023	Rectifier
31-9402	ARC3006	Rectifier
31-9402-1	ARC3003	Rectifier
31-9413	ARC3003	Rectifier
31-9414	ARC3017	Rectifier
31-9421	ARC3001	Rectifier
31-9422	ARC3022	Rectifier
31-9424	ARC3036	Rectifier
31-9427	ARC3020	Rectifier
31-9443	ARC3027	Rectifier
32-101	ARD9059	Diode
32-102	ARD9060	Diode
32-103	ARD9059	Diode
32-107	ARD9054	Diode
32-108	ARD9053	Diode
32-200	ARD9006	Diode
32-201	ARD9015	Diode
32-754	ARD9040	Diode
32-755	ARD9039	Diode
32-8100	ARD9046	Diode
32-8101	ARD9045	Diode
32-8104	ARD9023	Diode
32-8108	ARD9027	Diode
32-8904	ARD9002	Diode
32-8905	ARD9004	Diode
32-8908	ARD9003	Diode
32-9100	ARD9014	Diode
32-9101	ARD9005	Diode
32-9102	ARD9019	Diode
32-9103	ARD9010	Diode
33-9402	ARC3006	Rectifier
35-117	ARE1007	Regulator
35-118	ARE1003	Regulator
35-119	ARE1013	Regulator
35-122	ARE1014	Regulator
35-132	ARE1004	Regulator
35-133	ARE1019	Regulator
35-133-1	ARE1019	Regulator
35-140	ARE1014	Regulator
35-143-1	ARE1001	Regulator
35-148	ARE1022	Regulator
35-153	ARE1022	Regulator
35-162	ARE1027	Regulator
35-207	ARE9012	Regulator
35-207-1	ARE9012	Regulator
35-207-4	ARE9012	Regulator
35-214	ARE9017	Regulator
35-8103	ARE2029	Regulator
35-8116	ARE2013	Regulator
35-8117	ARE2023	Regulator
35-8126	ARE2017	Regulator
35-8127	ARE2011	Regulator
35-8128	ARE2016	Regulator
35-8130	ARE2018	Regulator
35-8139	ARE2007	Regulator
35-8203	ARE6003	Regulator
35-8204	ARE6020	Regulator
35-8204-1	ARE6020	Regulator
35-8204-2	ARE6020	Regulator
35-8205	ARE6004	Regulator
35-8205-1	ARE6004	Regulator
35-8213	ARE6024	Regulator
35-8214	ARE6022	Regulator
35-8215	ARE6019	Regulator
35-8215-1	ARE6019	Regulator
35-8217	ARE6008	Regulator
35-8220	ARE6028	Regulator
35-8221-1	ARE6028	Regulator
35-8226	ARE6004	Regulator
35-8229	ARE6020	Regulator
35-8239	ARE6013	Regulator
35-8240	ARE6025	Regulator
35-8241	ARE6015	Regulator
35-8242	ARE6031	Regulator
35-8245	ARE6017	Regulator
35-8246	ARE6030	Regulator
35-8309	ARE5026	Regulator
35-8346	ARE5021	Regulator
35-8347	ARE5019	Regulator
35-8348	ARE5022	Regulator
35-8355	ARE5006	Regulator
35-8359	ARE5003	Regulator
35-8603	ARE5044	Regulator
35-8604	ARE9006	Regulator
35-9101	ARE0015	Regulator
35-9102	ARE0001	Regulator
35-9103	ARE0003	Regulator
35-9103-1	ARE0003	Regulator
35-9104	ARE0047	Regulator
35-9104-1	ARE0047	Regulator
35-9106	ARE0027	Regulator
35-9107	ARE0047	Regulator
35-9113	ARE0071	Regulator
35-9129	ARE0022	Regulator
35-9131	ARE0035	Regulator
35-9300	ARE4009	Regulator
35-9305	ARE4010	Regulator
35-9309	ARE4006	Regulator
35-9403	ARE3004	Regulator
35-9405	ARE3004	Regulator
35-9405-1	ARE3004	Regulator
35-9406	ARE3018	Regulator
35-9407	ARE3018	Regulator
35-9422	ARE3021	Regulator
35-9426	ARE3002	Regulator
35-9500	ARE9007	Regulator
38-401	SVX7	Alt. Brush set
38-402	SVX7	Alt. Brush set
38-8102	AB2005	Alt. Brush set
38-8103	AB2005	Alt. Brush set
38-8106	AB2004	Alt. Brush set
38-8108	AB2002	Alt. Brush set
38-8109	AB2002	Alt. Brush set
38-8303	AB5001	Alt. Brush set
38-9103	BX185	Alt. Brush set
38-9104	BX213	Alt. Brush set
38-9300	ABH4002	A. Brush holder

WAI	AS	PRODUCT
38-9301	ABH4002	A. Brush holder
38-9402	SVX7	Alt. Brush set
39-111	ABH1006	A. Brush holder
39-1211	ABH1006	A. Brush holder
39-206	ABH9001	A. Brush holder
39-2203	ABH9001	A. Brush holder
44-2910	SD2001	Drive
46-92800	ATP4001	Terminal plug
51-132	SD1020	Drive
54-100	SD1014	Drive
54-101	SD1002	Drive
54-103	SD1024	Drive
54-118-2	SD0028	Drive
54-123	SD1003	Drive
54-123-3	SD1003	Drive
54-124	SD1005	Drive
54-124-3	SD1005	Drive
54-125-2	SD1015	Drive
54-132	SD1020	Drive
54-132-5	SD1020	Drive
54-135	SD1014	Drive
54-139	SD1004	Drive
54-139-9	SD1004	Drive
54-141	SD1006	Drive
54-141-5	SD1006	Drive
54-153	SD1022	Drive
54-154	SD1017	Drive
54-154-2	SD1017	Drive
54-156-1	SD1010	Drive
54-172	SD0029	Drive
54-174	SD1013	Drive
54-1802	SD0069	Drive
54-212	SD9016	Drive
54-212-2	SD9016	Drive
54-216-1	SD1019	Drive
54-7007	SD9034	Drive
54-7200	SD9034	Drive
54-8100-1	SD2002	Drive
54-8104	SD2004	Drive
54-8114	SD2017	Drive
54-8127	SD2023	Drive
54-8130	SD2015	Drive
54-8141	SD2016	Drive
54-8145	SD2006	Drive
54-8153	SD2014	Drive
54-8202	SD6003	Drive
54-8202-1	SD6003	Drive
54-8203	SD6002	Drive
54-8205-1	SD6001	Drive
54-8207	SD6002	Drive
54-8207-1	SD6002	Drive
54-8209	SD6005	Drive
54-8209-1	SD6005	Drive
54-8210	SD6023	Drive
54-8221	SD6009	Drive
54-82221	SD6006	Drive
54-8223	SD6033	Drive
54-8227	SD6020	Drive
54-8229	SD6011	Drive
54-8232	SD6016	Drive
54-8233	SD6010	Drive
54-8234	SD6031	Drive
54-8234-1	SD6031	Drive
54-8241-1	SD6006	Drive
54-8245	SD6032	Drive
54-8302	SD5011	Drive
54-8304-1	SD5002	Drive
54-8314	SD5006	Drive
54-8322	SD5001	Drive
54-83407	SD5024	Drive
54-83414	SD5037	Drive
54-8410-9	SD6012	Drive
54-8500	SD9030	Drive
54-9100	SD0002	Drive
54-9104	SD0152	Drive
54-9108	SD0018	Drive
54-91101	SD0073	Drive
54-91103	SD0072	Drive
54-9111	SD0017	Drive
54-91113-3	SD0088	Drive
54-9112	SD0009	Drive
54-9114	SD0106	Drive
54-9116	SD0011	Drive
54-9117	SD0010	Drive
54-91203	SD0005	Drive
54-91230	SD0005	Drive
54-9125	SD0114	Drive
54-9135	SD0030	Drive
54-9136	SD0031	Drive
54-9141	SD0013	Drive
54-9142	SD0016	Drive
54-9158	SD0036	Drive
54-9161	SD0052	Drive
54-9162	SD0045	Drive
54-9169	SD0040	Drive
54-9170	SD0041	Drive
54-9171	SD0058	Drive
54-9173	SD0055	Drive
54-9176	SD0038	Drive
54-9177	SD0033	Drive
54-9185	SD0048	Drive
54-9200	SD4002	Drive
54-9210	SD4038	Drive
54-9212	SD4038	Drive
54-9300	SD4005	Drive
54-9303	SD0042	Drive
54-9306	SD4004	Drive
54-9404	SD3008	Drive
54-9415	SD3001	Drive
54-9424	SD3004	Drive
54-9427	SD3008	Drive
54-9430	SD3002	Drive
54-9434	SD3014	Drive
5490-3204	SB6006	Sta. Brush set
55-9102	SL0002	Levers
5590-9003	SBH6002	S. Brush holder
59-133	SF1001	Starter field coil
59-133-1	SF1001	Starter field coil
59-133-3	SF1001	Starter field coil
59-9108	SF0006	Starter field coil
59-9109	SF0006	Starter field coil
59-9109-3	SF0006	Starter field coil
59-9113	SF0002	Starter field coil
59-9124	SF0005	Starter field coil
6-100-4	ABE9019	Bearing
6-100-4N	ABE9019	Bearing
6-100-4W	ABE9019	Bearing
6-100-4WH	ABE9019	Bearing
6-200-4W	ABE9001	Bearing
6-200-4WH	ABE9001	Bearing
6-201-4	ABE9002	Bearing
6-201-4W	ABE9002	Bearing
6-201-4WH	ABE9002	Bearing
6-203-4	ABE9004	Bearing
6-203-4N	ABE9004	Bearing
6-203-4U	ABE9004	Bearing
6-203-4W	ABE9004	Bearing
6-203-4WH	ABE9004	Bearing
6-2201-4W	ABE9007	Bearing
6-302-4WH	ABE9005	Bearing
6-303-4	ABE9006	Bearing
6-303-4N	ABE9006	Bearing
6-303-4W	ABE9006	Bearing
6-303-4WH	ABE9006	Bearing
6-3101-2	ABE9008	Bearing
6-3102-4	ABE9036	Bearing
6-3102-4W	ABE9036	Bearing
6-608-4	ABE9010	Bearing
6-608-4W	ABE9010	Bearing
61-123	SA1008	Starter armature
61-137	SA1011	Starter armature
61-140-1	SA1014	Starter armature
61-151	SA1012	Starter armature
61-210	SA9003	Starter armature
61-8112	SA2013	Starter armature
61-8113	SA2016	Starter armature
61-8202	SA6004	Starter armature
61-8208	SA6006	Starter armature
61-8301	SA5008	Starter armature
61-8302	SA5007	Starter armature
61-8302-1	SA5007	Starter armature
61-8314	SA5002	Starter armature
61-8317	SA5013	Starter armature
61-8408	SA9002	Starter armature
61-9100	SA0017	Starter armature
61-9104	SA0015	Starter armature
61-9105	SA0014	Starter armature
61-9110	SA0012	Starter armature
61-9114	SA0048	Starter armature
61-9131	SA0027	Starter armature
61-9132	SA0030	Starter armature
61-9134	SA0025	Starter armature
61-9150	SA0053	Starter armature
61-9151	SA0047	Starter armature
61-9401	SA3002	Starter armature
61-9402	SA3003	Starter armature
61-9409	SA3002	Starter armature
61-9416	SA3006	Starter armature
61-9417	SA3005	Starter armature
62-81402-1	SBU9031	Bushing
62-82402	SBU9032	Bushing
62-82403	SBU9032	Bushing
62-91307	SBU9021	Bushing
62-91402	SBU9003	Bushing
62-91403	SBU9001	Bushing
62-91405	SBU9006	Bushing

WAI	AS	PRODUCT
62-91408	SBU9008	Bushing
62-91700	SBU9012	Bushing
62-91800	SBU9015	Bushing
62-93400	SBU9028	Bushing
62-94201	SBU9026	Bushing
62-99500	SBU9014	Bushing
64-100-81N	ABE9019	Bearing
66-109	SS1004	Starter solenoid
66-110	SS1014	Starter solenoid
66-131	SS1007	Starter solenoid
66-139	SS1006	Starter solenoid
66-147	SS1024	Starter solenoid
66-204	SS1006	Starter solenoid
66-210	SS9014	Starter solenoid
66-8101	SS2001	Starter solenoid
66-8104	SS2002	Starter solenoid
66-8106	SS2003	Starter solenoid
66-8107	SS2005	Starter solenoid
66-8112	SS2006	Starter solenoid
66-8131	SS2013	Starter solenoid
66-8135	SS2018	Starter solenoid
66-8136	SS2017	Starter solenoid
66-8138	SS2019	Starter solenoid
66-8155	SS2009	Starter solenoid
66-82603	SP6008	Solenoids parts
66-82750	SP6001	Solenoids parts
66-82751	SP6010	Solenoids parts
66-82752	SP6018	Solenoids parts
66-82753	SP6001	Solenoids parts
66-82757	SP6013	Solenoids parts
66-82758	SP6012	Solenoids parts
66-82767	SP6019	Solenoids parts
66-82775	SP6014	Solenoids parts
66-8304	SS5033	Starter solenoid
66-8309	SS5015	Starter solenoid
66-8318	SS5013	Starter solenoid
66-8325	SS5005	Starter solenoid
66-8326	SS5004	Starter solenoid
66-8326-2	SS5004	Starter solenoid
66-8327	SS5003	Starter solenoid
66-8341	SS5005	Starter solenoid
66-8363	SS5029	Starter solenoid
66-8366	SS5011	Starter solenoid
66-8370	SS5026	Starter solenoid
66-8371	SS5022	Starter solenoid
66-8375	SS5025	Starter solenoid
66-8377	SS5017	Starter solenoid
66-8503	SS9016	Starter solenoid
66-8507	SS9015	Starter solenoid
66-9105	SS0009	Starter solenoid
66-9111	SS0053	Starter solenoid
66-9116	SS0011	Starter solenoid
66-9121	SS0015	Starter solenoid
66-9126	SS0010	Starter solenoid
66-9130	SS0014	Starter solenoid
66-9132	SS0023	Starter solenoid
66-91352	SP0005	Solenoids parts
66-9147	SS0019	Starter solenoid
66-9165	SS0032	Starter solenoid
66-9166	SS0048	Starter solenoid
66-9167	SS0063	Starter solenoid
66-9170	SS0020	Starter solenoid
66-91701	SP0004	Solenoids parts
66-9172	SS0035	Starter solenoid
66-9175	SS0012	Starter solenoid
66-9190	SS0039	Starter solenoid
66-9196	SS0018	Starter solenoid
66-9204	SS4005	Starter solenoid
66-9207	SS4006	Starter solenoid
66-9209	SS4006	Starter solenoid
66-9211	SS4017	Starter solenoid
66-9403	SS3009	Starter solenoid
66-9416	SS3007	Starter solenoid
68-110-3	RX70 8	Sta. Brush set
68-117	RX124H	Sta. Brush set
68-139	SB1001	Sta. Brush set
68-140	SB1005	Sta. Brush set
68-217	SB9004	Sta. Brush set
68-218	SB9004	Sta. Brush set
68-219	SB9004	Sta. Brush set
68-219-1	SB9004	Sta. Brush set
68-220	SB9004	Sta. Brush set
68-220-1	SB9004	Sta. Brush set
68-223	SB9001	Sta. Brush set
68-224	SB9001	Sta. Brush set
68-8104	SB2002	Sta. Brush set
68-8105	SB2002	Sta. Brush set
68-8108	SB2001	Sta. Brush set
68-8110	SB2001	Sta. Brush set
68-8121	SB2004	Sta. Brush set
68-8122	SB2008	Sta. Brush set
68-8123	SB2008	Sta. Brush set
68-8128	SB2009	Sta. Brush set
68-8133	SB2008	Sta. Brush set
68-8135-1	SB2004	Sta. Brush set
68-8201	SB6001	Sta. Brush set
68-8209	SB5001	Sta. Brush set
68-8211	SB6001	Sta. Brush set
68-8212	SB6001	Sta. Brush set
68-8216	SB6008	Sta. Brush set
68-8217	SB6008	Sta. Brush set
68-8220-1	SB6007	Sta. Brush set
68-8302	SB2014	Sta. Brush set
68-8308	SB2004	Sta. Brush set
68-8308-1	SB2004	Sta. Brush set
68-8309	SB2004	Sta. Brush set
68-8314	SB5004	Sta. Brush set
68-8315	SB5009	Sta. Brush set
68-8317	SB5004	Sta. Brush set
68-8321	SB5006	Sta. Brush set
68-8322	SB5006	Sta. Brush set
68-8323	SB5009	Sta. Brush set
68-9110	BSX137-143	Sta. Brush set
68-9111	BSX137-143	Sta. Brush set
68-9113	BSX134-144	Sta. Brush set
68-9116	BSX96	Sta. Brush set
68-9117	BSX100	Sta. Brush set
68-9124	BSX198-199	Sta. Brush set
68-9125	BSX76	Sta. Brush set
68-9126	BSX151	Sta. Brush set
68-9127	BSX140	Sta. Brush set
68-9128	SBH0007	S. Brush holder
68-9129	SBH0007	S. Brush holder
68-9129-1	SBH0007	S. Brush holder
68-9130-1	SBH0007	S. Brush holder
68-9131	SBH0009	S. Brush holder
68-9133	BSX138-142	Sta. Brush set
68-9136	SRS0001	Repair set
68-9139	SBH0007	S. Brush holder
68-9140	SBH0007	S. Brush holder
68-9141	SBH0009	S. Brush holder
68-9142	BSX134-144	Sta. Brush set
68-9143	SBH0020	S. Brush holder
68-9144	SBH0012	S. Brush holder
68-9145	SBH0012	S. Brush holder
68-9206	LASX36	Sta. Brush set
68-9307	MASX17-18	Sta. Brush set
68-9411	PSX133	Sta. Brush set
68-9412	PSX133	Sta. Brush set
68-9423	PSX83-84	Sta. Brush set
68-9424	PSX83-84	Sta. Brush set
68-95801	SB9003	Sta. Brush set
69-114	SBH1004	S. Brush holder
69-200	SBH9001	S. Brush holder
69-203	SBH9005	S. Brush holder
69-700	SBH9006	S. Brush holder
69-8114	SBH2005	S. Brush holder
69-8115	SBH2005	S. Brush holder
69-8117	SBH2002	S. Brush holder
69-8120	SBH2001	S. Brush holder
69-8203	SBH6002	S. Brush holder
69-8208	SBH6001	S. Brush holder
69-8302	SBH5006	S. Brush holder
69-8318	SBH5003	S. Brush holder
69-9105	SBH0001	S. Brush holder
69-9118	SBH0010	S. Brush holder
69-9119	SBH0012	S. Brush holder
69-9120	SBH0003	S. Brush holder
69-91201	SBH0008	S. Brush holder
76-91812	SG0005	Starter gear
76-91822	SG0012	Starter gear
76-94809	SG3001	Starter gear
8-201	ABE9045	Bearing
8-9102	ABE9009	Bearing
8-9107	ABE9045	Bearing
85-1334	SP0007	Solenoids parts
D54-338P	SD1020	Drive
D54-482	SD1004	Drive

WAPSA	AS	PRODUCT
00-408-32	ARE0071	Regulator
RWA-T-2	ARE0071	Regulator

WIEGEL	AS	PRODUCT
DIOUN800005	ARD9002	Diode
DIOUN800006	ARD9003	Diode
DIOUN800017	ARD9009	Diode
DIOUN800018	ARD9018	Diode
DIOUN800019	ARD9010	Diode
DIOUN800020	ARD9019	Diode
DIOUN800025	ARD9023	Diode
DIOUN800029	ARD9027	Diode

WOODAUTO	AS	PRODUCT
EC41453	SRS0004	Repair set
EC41459	SRS0010	Repair set
EC41460	SRS0012	Repair set
EC41461	SRS0009	Repair set
EC41462	SRS0013	Repair set

WOODAUTO	AS	PRODUCT
EC41463	SRS0011	Repair set
EC41802	SD9034	Drive
EC47175	SRS0014	Repair set
SDV32392	SD9035	Drive
SDV38212	SG0021	Starter gear
WRT67224	AR0015	Rotor
WSF27008	SF4001	Starter field coil
WST87999	AS0021	Stator

Wartburg	AS	PRODUCT
	SD9010	Drive

Wartburg VW	AS	PRODUCT
	SD9011	Drive

YALE	AS	PRODUCT
19960488	S0188	Starter
19960489	S0188	Starter
50027532	S0188	Starter

YAMAHA	AS	PRODUCT
124195-77741	SD2003	Drive
129242-77100	SA2017	Starter armature

YANMAR	AS	PRODUCT
118400-77251	SA2009	Starter armature
119131-77010	S2003	Starter
119226-77010	S2019	Starter
119226-77011	S2019	Starter
119865-77012	S2020	Starter
121254-77401	SA2007	Starter armature
121254-77660	SD2023	Drive
121254-77671	SS2005	Starter solenoid
123900-77010	S2021	Starter
124195-77760	SS2020	Starter solenoid
129136-77500	SA2001	Starter armature
129698-77101	SA2010	Starter armature
129900-77960	ARC2032	Rectifier
524160-77011	S2020	Starter
X-211437001	SS2002	Starter solenoid
X-211447007	SS2003	Starter solenoid
X-211461104	SA2014	Starter armature
X-21203700Z	SS2004	Starter solenoid

ZEN	AS	PRODUCT
1.01.0020.0	SD1002	Drive
1.01.0028.0	SD0114	Drive
1.01.0051.0	SD1004	Drive
1.01.0065.0	SD0002	Drive
1.01.0068.0	SD0139	Drive
1.01.0087.0	SD0005	Drive
1.01.0089.0	SD0113	Drive
1.01.0096.0	SD4036	Drive
1.01.0097.0	SD1005	Drive
1.01.0098.0	SD0018	Drive
1.01.0103.0	SD0048	Drive
1.01.0105.0	SD0046	Drive
1.01.0105.4	SD0046	Drive
1.01.0108.0	SD0001	Drive
1.01.0110.0	SD1003	Drive
1.01.0111.0	SD0042	Drive
1.01.0117.0	SD0028	Drive
1.01.0118.0	SD0009	Drive
1.01.0134.0	SD4008	Drive
1.01.0140.0	SD6002	Drive
1.01.0144.0	SD5001	Drive
1.01.0149.0	SD0015	Drive
1.01.0150.0	SD4003	Drive
1.01.0155.0	SD4002	Drive
1.01.0188.0	SD0029	Drive
1.01.0213.0	SD4004	Drive
1.01.0218.0	SD0006	Drive
1.01.0220.0	SD0105	Drive
1.01.0228.0	SD0004	Drive
1.01.0243.0	SD1001	Drive
1.01.0287.0	SD3001	Drive
1.01.0287.1	SD3001	Drive
1.01.0291.0	SD0010	Drive
1.01.0301.0	SD0018	Drive
1.01.0302.0	SD0009	Drive
1.01.0304.0	SD0106	Drive
1.01.0307.0	SD0139	Drive
1.01.0310.0	SD0008	Drive
1.01.0311.0	SD0152	Drive
1.01.0312.0	SD0152	Drive
1.01.0318.0	SD0048	Drive
1.01.0319.0	SD0003	Drive
1.01.0320.0	SD0007	Drive
1.01.0323.0	SD0002	Drive
1.01.0325.0	SD0118	Drive
1.01.0327.0	SD6001	Drive
1.01.0339.0	SD6002	Drive
1.01.0341.0	SD6013	Drive
1.01.0349.0	SD2018	Drive
1.01.0350.0	SD6001	Drive
1.01.0352.0	SD5002	Drive
1.01.0353.0	SD6002	Drive
1.01.0360.0	SD5004	Drive
1.01.0366.0	SD0011	Drive
1.01.0367.0	SD0012	Drive
1.01.0376.0	SD2001	Drive
1.01.0378.0	SD0020	Drive
1.01.0382.0	SD2017	Drive
1.01.0389.0	SD4007	Drive
1.01.0392.0	SD0019	Drive
1.01.0394.0	SD4012	Drive
1.01.0395.0	SD4011	Drive
1.01.0398.0	SD4001	Drive
1.01.0406.0	SD0022	Drive
1.01.0407.0	SD4005	Drive
1.01.0408.0	SD4006	Drive
1.01.0412.0	SD4038	Drive
1.01.0417.0	SD0026	Drive
1.01.0418.0	SD0050	Drive
1.01.0419.0	SD0027	Drive
1.01.0420.0	SD0013	Drive
1.01.0426.0	SD5003	Drive
1.01.0428.0	SD0016	Drive
1.01.0433.0	SD1014	Drive
1.01.0448.0	SD2002	Drive
1.01.0450.0	SD5004	Drive
1.01.0460.0	SD0017	Drive
1.01.0475.0	SD0052	Drive
1.01.0480.0	SD4013	Drive
1.01.0482.0	SD0014	Drive
1.01.0486.0	SD4037	Drive
1.01.0498.0	SD6008	Drive
1.01.0499.0	SD2003	Drive
1.01.0519.0	SD5012	Drive
1.01.0520.0	SD0023	Drive
1.01.0525.0	SD5010	Drive
1.01.0528.0	SD0021	Drive
1.01.0538.0	SD0025	Drive
1.01.0540.0	SD9001	Drive
1.01.0541.0	SD4017	Drive
1.01.0566.0	SD1004	Drive
1.01.0570.0	SD3008	Drive
1.01.0571.0	SD3002	Drive
1.01.0572.0	SD0033	Drive
1.01.0573.0	SD0038	Drive
1.01.0575.0	SD0086	Drive
1.01.0576.0	SD6009	Drive
1.01.0579.0	SD0045	Drive
1.01.0580.0	SD2006	Drive
1.01.0584.0	SD5013	Drive
1.01.0591.0	SD4035	Drive
1.01.0595.0	SD5005	Drive
1.01.0596.0	SD5006	Drive
1.01.0597.0	SD5021	Drive
1.01.0598.0	SD5007	Drive
1.01.0599.0	SD5008	Drive
1.01.0601.0	SD4016	Drive
1.01.0611.0	SD1006	Drive
1.01.0612.0	SD1007	Drive
1.01.0613.0	SD0041	Drive
1.01.0617.0	SD5019	Drive
1.01.0619.0	SD0040	Drive
1.01.0620.1	SD9016	Drive
1.01.0623.1	SD1021	Drive
1.01.0623.2	SD1021	Drive
1.01.0624.0	SD1020	Drive
1.01.0626.0	SD1015	Drive
1.01.0630.0	SD0044	Drive
1.01.0631.0	SD0036	Drive
1.01.0632.0	SD0035	Drive
1.01.0633.0	SD0039	Drive
1.01.0635.0	SD0047	Drive
1.01.0636.0	SD5014	Drive
1.01.0639.0	SD0055	Drive
1.01.0641.0	SD0067	Drive
1.01.0642.0	SD5011	Drive
1.01.0646.0	SD3005	Drive
1.01.0647.0	SD3006	Drive
1.01.0648.0	SD0054	Drive
1.01.0656.0	SD3004	Drive
1.01.0657.0	SD3007	Drive
1.01.0662.1	SD9029	Drive
1.01.0678.0	SD5015	Drive
1.01.0679.0	SD5036	Drive
1.01.0680.0	SD6011	Drive
1.01.0682.0	SD6002	Drive
1.01.0686.0	SD6007	Drive
1.01.0687.0	SD2012	Drive
1.01.0689.0	SD4029	Drive
1.01.0694.0	SD6008	Drive
1.01.0706.0	SD0049	Drive
1.01.0711.0	SD5018	Drive
1.01.0722.0	SD1018	Drive
1.01.0729.0	SD0058	Drive
1.01.0737.0	SD2004	Drive

ZEN	AS	PRODUCT
1.01.0737.1	SD2019	Drive
1.01.0745.0	SD0063	Drive
1.01.0747.0	SD3011	Drive
1.01.0750.0	SD6026	Drive
1.01.0752.0	SD1008	Drive
1.01.0756.0	SD1009	Drive
1.01.0757.0	SD2011	Drive
1.01.0758.0	SD5017	Drive
1.01.0760.0	SD0037	Drive
1.01.0764.0	SD0053	Drive
1.01.0765.0	SD6004	Drive
1.01.0769.0	SD4018	Drive
1.01.0770.0	SD1011	Drive
1.01.0774.0	SD1010	Drive
1.01.0775.0	SD3009	Drive
1.01.0776.0	SD3026	Drive
1.01.0779.0	SD4023	Drive
1.01.0780.1	SD1022	Drive
1.01.0785.0	SD2023	Drive
1.01.0786.0	SD4009	Drive
1.01.0786.2	SD4009	Drive
1.01.0787.0	SD3014	Drive
1.01.0790.0	SD2009	Drive
1.01.0792.0	SD2008	Drive
1.01.0794.0	SD0061	Drive
1.01.0796.0	SD0082	Drive
1.01.0799.0	SD0057	Drive
1.01.0800.0	SD0043	Drive
1.01.0801.0	SD5039	Drive
1.01.0803.0	SD0068	Drive
1.01.0805.0	SD0060	Drive
1.01.0806.0	SD5020	Drive
1.01.0808.0	SD6031	Drive
1.01.0809.0	SD6016	Drive
1.01.0810.0	SD6016	Drive
1.01.0811.0	SD2006	Drive
1.01.0814.0	SD0121	Drive
1.01.0815.0	SD9030	Drive
1.01.0818.0	SD6027	Drive
1.01.0823.0	SD4034	Drive
1.01.0824.1	SD1019	Drive
1.01.0825.0	SD5021	Drive
1.01.0830.0	SD6010	Drive
1.01.0831.0	SD9002	Drive
1.01.0833.1	SD3015	Drive
1.01.0836.0	SD5016	Drive
1.01.0837.0	SD0014	Drive
1.01.0838.0	SD0025	Drive
1.01.0841.0	SD6032	Drive
1.01.0843.0	SD3019	Drive
1.01.0844.0	SD2016	Drive
1.01.0844.1	SD2016	Drive
1.01.0851.0	SD0059	Drive
1.01.0852.0	SD0078	Drive
1.01.0858.0	SD1020	Drive
1.01.0863.0	SD4022	Drive
1.01.0870.1	SD1017	Drive
1.01.0875.0	SD0034	Drive
1.01.0878.0	SD4019	Drive
1.01.0892.0	SD9004	Drive
1.01.0900.0	SD0055	Drive
1.01.0901.0	SD2015	Drive
1.01.0907.0	SD9005	Drive
1.01.0914.0	SD1016	Drive
1.01.0920.0	SD0079	Drive
1.01.0921.0	SD6019	Drive
1.01.0925.0	SD0071	Drive
1.01.0926.0	SD0005	Drive
1.01.0929.0	SD0154	Drive
1.01.0931.0	SD0069	Drive
1.01.0932.0	SD0070	Drive
1.01.0936.0	SD3010	Drive
1.01.0937.0	SD0066	Drive
1.01.0938.0	SD0077	Drive
1.01.0946.0	SD6005	Drive
1.01.0947.0	SD6003	Drive
1.01.0951.0	SD6014	Drive
1.01.0954.0	SD6024	Drive
1.01.0957.0	SD5027	Drive
1.01.0958.0	SD1013	Drive
1.01.0961.0	SD3010	Drive
1.01.0962.0	SD0024	Drive
1.01.0965.0	SD3018	Drive
1.01.0969.0	SD4024	Drive
1.01.0970.0	SD0064	Drive
1.01.0972.0	SD0075	Drive
1.01.0975.0	SD4028	Drive
1.01.0985.0	SD1023	Drive
1.01.0997.0	SD0073	Drive
1.01.0998.0	SD0088	Drive
1.01.0999.0	SD4027	Drive
1.01.1011.0	SD0081	Drive
1.01.1018.0	SD5030	Drive
1.01.1020.0	SD2014	Drive
1.01.1022.0	SD0103	Drive
1.01.1023.0	SD3013	Drive
1.01.1024.0	SD5023	Drive
1.01.1025.0	SD4032	Drive
1.01.1026.0	SD0151	Drive
1.01.1030.0	SD0093	Drive
1.01.1033.0	SD0095	Drive
1.01.1035.0	SD5034	Drive
1.01.1037.0	SD0097	Drive
1.01.1038.0	SD0083	Drive
1.01.1043.0	SD5024	Drive
1.01.1046.0	SD5026	Drive
1.01.1048.0	SD1012	Drive
1.01.1057.0	SD0080	Drive
1.01.1058.0	SD0096	Drive
1.01.1063.0	SD5022	Drive
1.01.1064.0	SD3001	Drive
1.01.1068.0	SD9031	Drive
1.01.1069.0	SD0092	Drive
1.01.1070.0	SD0090	Drive
1.01.1071.0	SD0065	Drive
1.01.1072.0	SD0094	Drive
1.01.1074.0	SD3012	Drive
1.01.1076.0	SD0114	Drive
1.01.1082.0	SD0114	Drive
1.01.1088.0	SD0114	Drive
1.01.1090.0	SD0114	Drive
1.01.1092.0	SD0114	Drive
1.01.1095.0	SD0114	Drive
1.01.1097.0	SD6018	Drive
1.01.1104.0	SD4015	Drive
1.01.1107.0	SD0130	Drive
1.01.1108.0	SD0091	Drive
1.01.1113.0	SD4041	Drive
1.01.1117.0	SD4014	Drive
1.01.1124.0	SD9016	Drive
1.01.1152.0	SD3016	Drive
1.01.1153.0	SD0115	Drive
1.01.1155.0	SD0126	Drive
1.01.1157.0	SD0112	Drive
1.01.1158.0	SD0108	Drive
1.01.1159.0	SD0101	Drive
1.01.1160.0	SD0109	Drive
1.01.1169.0	SD4031	Drive
1.01.1171.0	SD0153	Drive
1.01.1178.0	SD0123	Drive
1.01.1179.0	SD0122	Drive
1.01.1451.0	SD0116	Drive
1.01.1458.0	SD3020	Drive
1.01.1472.0	SD0098	Drive
1.01.1477.0	SD4021	Drive
1.01.1480.0	SD0107	Drive
1.01.1483.0	SD0142	Drive
1.01.1484.0	SD4025	Drive
1.01.1485.0	SD0110	Drive
1.01.1486.0	SD0124	Drive
1.01.1487.0	SD0145	Drive
1.01.1545.0	SD0156	Drive
1.01.1563.0	SD5029	Drive
1.01.1576.0	SD0120	Drive
1.01.1592.0	SD5025	Drive
1.01.1597.0	SD0137	Drive
1.01.1619.0	SD0136	Drive
1.01.1629.0	SD0125	Drive
1.01.1630.0	SD0102	Drive
1.01.1631.0	SD0148	Drive
1.01.1632.0	SD0155	Drive
1.01.1641.0	SD0135	Drive
1.01.1642.0	SD0144	Drive
1.01.1643.0	SD0102	Drive
1.01.1650.0	SD0146	Drive
1158	SD0108	Drive
1545	SD0156	Drive
1592	SD5025	Drive
1629	SD0125	Drive
1630	SD0102	Drive
1631	SD0148	Drive
1642	SD0144	Drive
1643	SD0102	Drive
2.05.0375.0	AFP0002	FW pulley
2.05.0376.0	AFP0011	FW pulley
2.05.0377.0	AFP0003	FW pulley
2.05.0378.0	AFP0010	FW pulley
2.05.0379.0	AFP4001	FW pulley
2.05.0380.0	AFP0009	FW pulley
2.05.0381.0	AFP0005	FW pulley
2.05.0382.0	AFP0006	FW pulley
2.05.0383.0	AFP0004	FW pulley
2.05.0384.0	AFP0001	FW pulley
2.05.0387.0	AFP0019	FW pulley
2.05.0388.0	AFP0018	FW pulley
2.05.0389.0	AFP3004	FW pulley

ZEN	AS	PRODUCT
2.05.0390.0	AFP0022	FW pulley
2.05.0392.0	AFP0017	FW pulley
2.05.0393.0	AFP0008	FW pulley
2.05.0394.0	AFP0015	FW pulley
2.05.0395.0	AFP0021	FW pulley
2.05.0396.0	AFP3005	FW pulley
2.05.0403.0	AFP0013	FW pulley
2.05.0406.0	AFP5009	FW pulley
2.05.0408.0	AFP9004	FW pulley
2.05.0409.0	AFP0024	FW pulley
2.05.0410.0	AFP3002	FW pulley
2.05.0411.0	AFP3003	FW pulley
2.05.0419.0	AFP5001	FW pulley
2.05.0422.0	AFP0071	FW pulley
2.05.0424.0	AFP6010	FW pulley
2.05.0425.0	AFP0032	FW Pulley
2.05.0426.0	AFP0007	FW pulley
2.05.0428.0	AFP9008	FW pulley
2.05.0431.0	AFP2003	FW pulley
2.05.0437.0	AFP3013	FW pulley
2.05.0438.0	AFP9003	FW pulley
2.05.0440.0	AFP6002	FW pulley
2.05.0445.0	AFP0042	FW pulley
2.05.0446.0	AFP0040	FW pulley
2.05.0448.0	AFP0023	FW pulley
2.05.0449.0	AFP3008	FW pulley
2.05.0450.0	AFP0020	FW pulley
2.05.0453.0	AFP3009	FW pulley
2.05.0454.0	AFP2002	FW pulley
2.05.0455.0	AFP0026	FW pulley
2.05.0456.0	AFP0044	FW pulley
2.05.0457.0	AFP9010	FW pulley
2.05.0458.0	AFP0028	FW pulley
2.05.0459.0	AFP3007	FW pulley
2.05.0462.0	AFP9006	FW pulley
2.05.0466.0	AFP1001	FW pulley
2.05.0467.0	AFP3018	FW pulley
2.05.0495.0	AFP3012	FW pulley
2.05.0496.0	AFP6009	FW pulley
2.05.0500.0	AFP2001	FW pulley
2.05.0501.0	AFP6012	FW pulley
2.05.0504.0	AFP0059	FW pulley
2.05.0505.0	AFP0048	FW pulley
2.05.0506.0	AFP4005	FW pulley
2.05.0507.0	AFP3015	FW pulley
2.05.0508.0	AFP0054	FW pulley
2.05.0510.0	AFP3015	FW pulley
2.05.0514.0	AFP0033	FW pulley
2377	AFP0003	FW pulley
5374	AFP3006	FW pulley
5375	AFP0002	FW pulley
5376	AFP0011	FW pulley
5377	AFP0003	FW pulley
5378	AFP0010	FW pulley
5379	AFP4001	FW pulley
5380	AFP0009	FW pulley
5381	AFP0005	FW pulley
5382	AFP0006	FW pulley
5383	AFP0004	FW pulley
5384	AFP0001	FW pulley
5385	AFP0014	FW pulley
5387	AFP0019	FW pulley

ZEN	AS	PRODUCT
5388	AFP0017	FW pulley
5389	AFP3004	FW pulley
5390	AFP0022	FW pulley
5392	AFP0017	FW pulley
5393	AFP0008	FW pulley
5394	AFP0015	FW pulley
5395	AFP0021	FW pulley
5396	AFP3005	FW pulley
5403	AFP0013	FW pulley
5406	AFP5009	FW pulley
5408	AFP9004	FW pulley
5409	AFP0024	FW pulley
5410	AFP3002	FW pulley
5411	AFP3003	FW pulley
5419	AFP5001	FW pulley
5422	AFP0071	FW pulley
5424	AFP6010	FW pulley
5425	AFP0032	FW Pulley
5426	AFP0007	FW pulley
5428	AFP9008	FW pulley
5429	AFP9007	FW pulley
5431	AFP2003	FW pulley
5437	AFP3013	FW pulley
5438	AFP9003	FW pulley
5440	AFP6002	FW pulley
5445	AFP0042	FW pulley
5446	AFP0040	FW pulley
5448	AFP0023	FW pulley
5449	AFP3008	FW pulley
5450	AFP0020	FW pulley
5453	AFP3009	FW pulley
5454	AFP2002	FW pulley
5455	AFP0026	FW pulley
5456	AFP0044	FW pulley
5457	AFP9010	FW pulley
5458	AFP0028	FW pulley
5459	AFP3007	FW pulley
5462	AFP9006	FW pulley
5466	AFP1001	FW pulley
5467	AFP3018	FW pulley
5495	AFP3012	FW pulley
5496	AFP6009	FW pulley
5500	AFP2001	FW pulley
5501	AFP6012	FW pulley
5502	AFP6014	FW pulley
5504	AFP0059	FW pulley
5505	AFP0048	FW pulley
5506	AFP4005	FW pulley
5507	AFP3015	FW pulley
5508	AFP0054	FW pulley
5510	AFP3015	FW pulley
5514	AFP0033	FW pulley
6.39.0301.5	SD6006	Drive
6.39.0402.5	SD6029	Drive

ZETOR	AS	PRODUCT
64.942.801	S9049	Starter
69185771	S9024	Starter
933253	S9024	Starter
976111	S9024	Starter
976116	S9024	Starter
976117	S9024	Starter

ZM	AS	PRODUCT
ZM-1473	SS0038	Starter solenoid
ZM-1479	SS0020	Starter solenoid
ZM-1498	SS3015	Starter solenoid
ZM-1557	SS1011	Starter solenoid
ZM-1573	SS0064	Starter solenoid
ZM-1590	SS3004	Starter solenoid
ZM-1592	SS3005	Starter solenoid
ZM-1592A	SS3005	Starter solenoid
ZM-1594	SS3007	Starter solenoid
ZM-1595	SS4011	Starter solenoid
ZM-1597	SS3006	Starter solenoid
ZM-1613	SS4017	Starter solenoid
ZM-1639	SS0029	Starter solenoid
ZM-1695	SS5011	Starter solenoid
ZM-1698	SS5003	Starter solenoid
ZM-1699	SS5005	Starter solenoid
ZM-1713	SS2016	Starter solenoid
ZM-1717	SS2019	Starter solenoid
ZM-1719	SS2017	Starter solenoid
ZM-1731	SS0015	Starter solenoid
ZM-1762	SS9019	Starter solenoid
ZM-1782	SS2010	Starter solenoid
ZM-1860	SS1009	Starter solenoid
ZM-1862	SS1008	Starter solenoid
ZM-1981	SS2008	Starter solenoid
ZM-2371	SS0039	Starter solenoid
ZM-2395	SS4019	Starter solenoid
ZM-2409	SS1019	Starter solenoid
ZM-2460	SS1020	Starter solenoid
ZM-2473	SS0038	Starter solenoid
ZM-2494	SS3021	Starter solenoid
ZM-2571	SS0006	Starter solenoid
ZM-2573	SS0011	Starter solenoid
ZM-2595	SS4020	Starter solenoid
ZM-2699	SS5005	Starter solenoid
ZM-2719	SS2018	Starter solenoid
ZM-2762	SS9020	Starter solenoid
ZM-2993	SS5018	Starter solenoid
ZM-3395	SS4001	Starter solenoid
ZM-3595	SS4002	Starter solenoid
ZM-371	SS0021	Starter solenoid
ZM-372	SS0049	Starter solenoid
ZM-377391	SP0001	Solenoids parts
ZM-378	SS0016	Starter solenoid
ZM-379	SS0016	Starter solenoid
ZM-3805	SS1023	Starter solenoid
ZM-395	SS4020	Starter solenoid
ZM-401	SS9021	Starter solenoid
ZM-403	SS9003	Starter solenoid
ZM-404	SS9004	Starter solenoid
ZM-410	SS2007	Starter solenoid
ZM-4395	SS4008	Starter solenoid
ZM-4473	SS0046	Starter solenoid
ZM-452	SS1013	Starter solenoid
ZM-456	SS1005	Starter solenoid
ZM-459	SS1015	Starter solenoid
ZM-4595	SS4011	Starter solenoid
ZM-461	SS1003	Starter solenoid
ZM-468	SS1024	Starter solenoid
ZM-4695	SS5022	Starter solenoid
ZM-4698	SS5003	Starter solenoid
ZM-4699	SS5005	Starter solenoid

ZM	AS	PRODUCT
ZM-472	SS0048	Starter solenoid
ZM-473	SS0063	Starter solenoid
ZM-475	SS0025	Starter solenoid
ZM-4760	SS9001	Starter solenoid
ZM-477	SS0040	Starter solenoid
ZM-4793	SS5031	Starter solenoid
ZM-490	SS3013	Starter solenoid
ZM-491	SS3003	Starter solenoid
ZM-492	SS3004	Starter solenoid
ZM-496	SS3012	Starter solenoid
ZM-497	SS3019	Starter solenoid
ZM-521	SS0057	Starter solenoid
ZM-522	SS0024	Starter solenoid
ZM-531	SS0015	Starter solenoid
ZM-538	SS0003	Starter solenoid
ZM-53885	SP0003	Solenoids parts
ZM-53891	SP0003	Solenoids parts
ZM-5395	SS2012	Starter solenoid
ZM-543	SS0015	Starter solenoid
ZM-544	SS0003	Starter solenoid
ZM-551	SS1001	Starter solenoid
ZM-555	SS1012	Starter solenoid
ZM-556	SS1017	Starter solenoid
ZM-5619	SS4023	Starter solenoid
ZM-571	SS0006	Starter solenoid
ZM-573	SS0010	Starter solenoid
ZM-57391	SP0002	Solenoids parts
ZM-573C	SS0010	Starter solenoid
ZM-574	SS0064	Starter solenoid
ZM-575	SS0011	Starter solenoid
ZM-57591	SP0001	Solenoids parts
ZM-575C	SS0011	Starter solenoid
ZM-57691	SP0002	Solenoids parts
ZM-577	SS0023	Starter solenoid
ZM-578	SS0005	Starter solenoid
ZM-580	SS0006	Starter solenoid
ZM-582	SS2002	Starter solenoid
ZM-583	SS2004	Starter solenoid
ZM-590	SS3004	Starter solenoid
ZM-591	SS3004	Starter solenoid
ZM-592	SS3007	Starter solenoid
ZM-593	SS3009	Starter solenoid
ZM-594	SS3008	Starter solenoid
ZM-595	SS3001	Starter solenoid
ZM-597	SS3002	Starter solenoid
ZM-599	SS3004	Starter solenoid
ZM-603	SS9008	Starter solenoid
ZM-607	SS9016	Starter solenoid
ZM-609	SS9015	Starter solenoid
ZM-610	SS4006	Starter solenoid
ZM-612	SS4005	Starter solenoid
ZM-613	SS4017	Starter solenoid
ZM-615	SS4012	Starter solenoid
ZM-624	SS0056	Starter solenoid
ZM-627	SS0014	Starter solenoid
ZM-638	SS0008	Starter solenoid
ZM-6395	SS4008	Starter solenoid
ZM-644	SS0007	Starter solenoid
ZM-645	SS0004	Starter solenoid
ZM-648	SS0009	Starter solenoid
ZM-653	SS0053	Starter solenoid
ZM-654	SS4003	Starter solenoid
ZM-655	SS4003	Starter solenoid
ZM-656	SS4004	Starter solenoid
ZM-657	SS4004	Starter solenoid
ZM-6595	SS4010	Starter solenoid
ZM-660	SS6001	Starter solenoid
ZM-662	SS6002	Starter solenoid
ZM-672	SS0065	Starter solenoid
ZM-674	SS0019	Starter solenoid
ZM-676	SS0011	Starter solenoid
ZM-677	SS0066	Starter solenoid
ZM-6773	SS0047	Starter solenoid
ZM-679	SS0013	Starter solenoid
ZM-681	SS2002	Starter solenoid
ZM-682	SS2003	Starter solenoid
ZM-683	SS2009	Starter solenoid
ZM-684	SS2009	Starter solenoid
ZM-686	SS2005	Starter solenoid
ZM-688	SS2004	Starter solenoid
ZM-690	SS5033	Starter solenoid
ZM-691	SS5001	Starter solenoid
ZM-693	SS5008	Starter solenoid
ZM-695	SS5011	Starter solenoid
ZM-696	SS5005	Starter solenoid
ZM-697	SS5002	Starter solenoid
ZM-698	SS5003	Starter solenoid
ZM-699	SS5005	Starter solenoid
ZM-702	SS6004	Starter solenoid
ZM-703	SS6003	Starter solenoid
ZM-705	SS6009	Starter solenoid
ZM-706	SS6003	Starter solenoid
ZM-707	SS6005	Starter solenoid
ZM-708	SS6007	Starter solenoid
ZM-710	SS2006	Starter solenoid
ZM-711	SS2013	Starter solenoid
ZM-717	SS2021	Starter solenoid
ZM-719	SS2022	Starter solenoid
ZM-722	SS0024	Starter solenoid
ZM-727	SS0014	Starter solenoid
ZM-744	SS0003	Starter solenoid
ZM-7595	SS4002	Starter solenoid
ZM-760	SS9001	Starter solenoid
ZM-761	SS9002	Starter solenoid
ZM-762	SS9019	Starter solenoid
ZM-771	SS0006	Starter solenoid
ZM-773	SS0067	Starter solenoid
ZM-77391	SP0002	Solenoids parts
ZM-778	SS0035	Starter solenoid
ZM-781	SS2014	Starter solenoid
ZM-782	SS2010	Starter solenoid
ZM-793	SS5031	Starter solenoid
ZM-794	SS5028	Starter solenoid
ZM-806	SS9012	Starter solenoid
ZM-808	SS1023	Starter solenoid
ZM-809	SS1023	Starter solenoid
ZM-815	SS1022	Starter solenoid
ZM-833	SS0030	Starter solenoid
ZM-835	SS0027	Starter solenoid
ZM-860	SS1010	Starter solenoid
ZM-86096	SS1010	Starter solenoid
ZM-861	SS1007	Starter solenoid
ZM-873	SS0062	Starter solenoid
ZM-87391	SP0001	Solenoids parts
ZM-876	SS0012	Starter solenoid
ZM-87691	SP0006	Solenoids parts
ZM-87696	SP0006	Solenoids parts
ZM-877	SS0023	Starter solenoid
ZM-878	SS0011	Starter solenoid
ZM-87891	SP0001	Solenoids parts
ZM-890	SS5015	Starter solenoid
ZM-891	SS5009	Starter solenoid
ZM-892	SS5029	Starter solenoid
ZM-893	SS5016	Starter solenoid
ZM-894	SS5010	Starter solenoid
ZM-896	SS5007	Starter solenoid
ZM-901	SS0002	Starter solenoid
ZM-902	SS0001	Starter solenoid
ZM-904	SS0031	Starter solenoid
ZM-950	SS1004	Starter solenoid
ZM-951	SS1014	Starter solenoid
ZM-9595	SS4020	Starter solenoid
ZM-972	SS0017	Starter solenoid
ZM-973	SS0018	Starter solenoid
ZM-977	SS0020	Starter solenoid
ZM-978	SS0026	Starter solenoid
ZM-991	SS5024	Starter solenoid
ZM-992	SS5027	Starter solenoid